# ACOPOS

## User's Manual

Version: **2.10 (March 2020)**
Order no.: **MAACP2-ENG**

## Translation of the original documentation

All values in this manual are current as of its creation. We reserve the right to change the contents of this manual without notice. B&R Industrial Automation GmbH is not liable for technical or editorial errors and defects in this manual. In addition, B&R Industrial Automation GmbH assumes no liability for damages that are directly or indirectly attributable to the delivery, performance or use of this material. We point out that the software and hardware designations and brand names of the respective companies used in this document are subject to general trademark, brand or patent protection.



Provided by Industrial Automation Co. • www.industrialautomationco.com • Parts & Repair: 877-727-8757

Provided by Industrial Automation Co. • www.industrialautomationco.com • Parts & Repair: 877-727-8757

## Chapter 1 General information ..... 9

1 Manual history ..... 9
2 ACOPOS ..... 10
2.1 High-performance servo drive design ..... 10
2.2 More room for innovation ..... 10
2.3 Maximum safety ..... 10
2.4 Modular and precise with communication options ..... 11
2.5 Configuring instead of programming ..... 12
2.6 PLCopen motion control function blocks ..... 12
2.7 Higher productivity with Smart Process Technology ..... 13
2.8 ACOPOS – Perfect for CNC applications as well ..... 13
2.9 Quick and easy commissioning ..... 14
2.10 Tools for straightforward and efficient diagnostics ..... 15
3 ACOPOS configurations ..... 16
3.1 ACOPOS in a POWERLINK network ..... 16
3.1.1 Recommended topology for POWERLINK networks ..... 17
3.1.2 Further literature ..... 17
3.2 Compact, modular motion control applications ..... 17
3.3 Extensive, modular motion control applications with up to 253 axes ..... 18
3.4 ACOPOS in a CAN bus network ..... 18
3.5 Drive-based control ..... 19
4 Safety guidelines ..... 20
4.1 Organization of notices ..... 20
4.2 General information ..... 20
4.3 Intended use ..... 21
4.4 Protection against electrostatic discharge ..... 21
4.4.1 Packaging ..... 21
4.4.2 Guidelines for proper ESD handling ..... 21
4.5 Transport and storage ..... 22
4.6 Installation ..... 22
4.7 Operation ..... 22
4.7.1 Protection against touching electrical parts ..... 22
4.7.2 Protection against hazardous movements ..... 23
4.7.3 Protection against burns ..... 23
4.8 Characteristic values for functional safety ..... 24
4.9 Environmentally friendly disposal ..... 24
4.9.1 Separation of materials ..... 24
4.10 Security concept ..... 25

## Chapter 2 Technical data ..... 27

1 Module overview ..... 27
2 ACOPOS servo drives ..... 29
2.1 Overview ..... 30
2.1.1 24 VDC supply during power failures ..... 30
2.2 Status indicators ..... 31
2.2.1 Status changes when starting up the operating system loader ..... 31
2.3 ACOPOS 1010, 1016 ..... 33
2.3.1 ACOPOS 8V1010.0xx-2 ..... 33
2.3.2 ACOPOS 8V1010.5xx-2 ..... 37
2.3.3 ACOPOS 8V1016.0xx-2 ..... 41
2.3.4 ACOPOS 8V1016.5xx-2 ..... 45
2.3.5 Wiring ..... 49
2.4 ACOPOS 1022, 1045, 1090 ..... 57
2.4.1 ACOPOS 1022 ..... 57
2.4.2 ACOPOS 1045 ..... 61
2.4.3 ACOPOS 1090 ..... 65
2.4.4 Wiring ..... 68




Provided by Industrial Automation Co. • www.industrialautomationco.com • Parts & Repair: 877-727-8757

2.5 ACOPOS 1180, 1320 ... 75
2.5.1 ACOPOS 1180 ... 75
2.5.2 ACOPOS 1320 ... 79
2.5.3 Wiring ... 83
2.6 ACOPOS 1640, 128M ... 90
2.6.1 ACOPOS 1640 ... 90
2.6.2 ACOPOS 128M ... 94
2.6.3 Wiring ... 98
3 ACOPOS plug-in modules ... 104
3.1 General information ... 104
3.2 AC110 - CAN module ... 105
3.2.1 General information ... 105
3.2.2 Order data ... 105
3.2.3 Technical data ... 105
3.2.4 CAN node number settings ... 106
3.2.5 Status indicators ... 106
3.2.6 Firmware ... 106
3.2.7 Wiring ... 106
3.3 AC114 - POWERLINK V2 module ... 107
3.3.1 General information ... 107
3.3.2 Order data ... 107
3.3.3 Technical data ... 107
3.3.4 Setting the POWERLINK node number ... 108
3.3.5 Status indicators ... 108
3.3.6 Firmware ... 108
3.3.7 Wiring ... 109
3.4 AC120 - EnDat 2.1 encoder module ... 110
3.4.1 General information ... 110
3.4.2 Order data ... 110
3.4.3 Technical data ... 111
3.4.4 Status indicators ... 112
3.4.5 Firmware ... 112
3.4.6 Wiring ... 112
3.5 AC121 - HIPERFACE encoder module ... 114
3.5.1 General information ... 114
3.5.2 Order data ... 114
3.5.3 Technical data ... 114
3.5.4 Status indicators ... 115
3.5.5 Firmware ... 115
3.5.6 Wiring ... 116
3.6 AC122 - Resolver module ... 118
3.6.1 8AC122.60-3 ... 118
3.6.2 Status indicators ... 119
3.6.3 Wiring ... 120
3.7 AC123 - Incremental encoder and SSI absolute encoder module ... 121
3.7.1 General information ... 121
3.7.2 Order data ... 121
3.7.3 Technical data ... 121
3.7.4 Status indicators ... 122
3.7.5 Firmware ... 122
3.7.6 Wiring ... 123
3.8 AC125 - BiSS encoder module ... 125
3.8.1 8AC125.60-1 ... 125
3.8.2 8AC125.60-2 ... 128
3.8.3 8AC125.61-2 ... 131
3.8.4 Status indicators ... 133
3.8.5 Firmware ... 133



Provided by Industrial Automation Co. • www.industrialautomationco.com • Parts & Repair: 877-727-8757

3.9 AC126 - EnDat 2.2 module....134
3.9.1 General information....134
3.9.2 Order data....134
3.9.3 Technical data....135
3.9.4 Status indicators....135
3.9.5 Firmware....136
3.9.6 Wiring....136
3.10 AC130 - Digital mixed module....137
3.10.1 General information....137
3.10.2 Order data....137
3.10.3 Technical data....137
3.10.4 Status indicators....139
3.10.5 Firmware....139
3.10.6 Wiring....139
3.11 AC131 - Mixed module....141
3.11.1 General information....141
3.11.2 Order data....141
3.11.3 Technical data....141
3.11.4 Status indicators....143
3.11.5 Firmware....143
3.11.6 Wiring....143
4 8AXB battery module....145
4.1 General information....145
4.2 Order data....145
4.3 Technical data....145
4.4 Changing/Inserting the battery module 8AXB000.0000-00....146
5 8B0W external braking resistors....148
5.1 Order data....148
5.2 Technical data....148
5.3 Wiring....149
5.3.1 8B0W braking resistors - Pinout....149
6 Cables....150
6.1 General information....150
6.1.1 Pre-assembled cables....150
6.2 Overview....150
6.3 Motor cables....154
6.3.1 0.75 mm² motor cables....154
6.3.2 1.5 mm² motor cables....158
6.3.3 4 mm² motor cables....160
6.3.4 4 mm² motor cables with size 1.5 motor connector....162
6.3.5 10 mm² motor cables....164
6.3.6 35 mm² motor cables....166
6.3.7 Wiring....167
6.4 8CH hybrid motor cables....170
6.4.1 1.5 mm² hybrid motor cables....170
6.4.2 4 mm² hybrid motor cables....172
6.4.3 Wiring....174
6.5 EnDat 2.1 cables....176
6.5.1 Order data....176
6.5.2 Technical data....176
6.5.3 Wiring....177
6.6 Resolver cables....179
6.6.1 Order data....179
6.6.2 Technical data....179
6.6.3 Wiring....180
6.7 8BCR ESTB resolver cables....182
6.7.1 Order data....182



Provided by Industrial Automation Co. • www.industrialautomationco.com • Parts & Repair: 877-727-8757

6.7.2 Technical data....182
6.7.3 Wiring....183
6.8 Cable extensions....185
6.8.1 0.75 mm² motor cable with springtec connector....185
6.8.2 1.5 mm² motor cables....187
6.8.3 4 mm² motor cables....189
6.8.4 4 mm² motor cables with size 1.5 motor connector....191
6.8.5 10 mm² motor cables....193
6.8.6 Resolver cables....195
6.8.7 Resolver cables with springtec connector....197
7 Connectors....199
7.1 General information....199
7.2 Motor connectors....199
7.2.1 Order data....199
7.2.2 Technical data....199
7.3 Encoder connectors....200
7.3.1 EnDat connectors....200
7.3.2 Resolver connectors....202

**Chapter 3 Installation....203**
1 General....203
2 Dimension diagrams and installation dimensions....204
2.1 ACOPOS 1010, 1016....204
2.2 ACOPOS 1022, 1045, 1090....205
2.3 ACOPOS 1180, 1320....206
2.4 ACOPOS 1640....207
2.5 ACOPOS 128M....208
2.6 External braking resistors....209
2.6.1 8B0W0045H000.001-1, 8B0W0079H000.001-1, 8B0W0096H000.001-1....209
3 Installing and removing plug-in modules....211
3.1 General information....211
3.2 Installation....211
3.3 Removal....211
4 Installing devices from different ACOPOS series directly next to each other....212
5 Using cooling systems in control cabinets....213
5.1 Natural convection....213
5.2 Using filter fans....213
5.3 Using air/air heat exchangers....214
5.4 Using air/water heat exchangers....215
5.5 Using cooling units....216
5.5.1 General information....216
5.5.2 Placing a cooling unit on top of the control cabinet....216
5.5.3 Placing a cooling unit on the front of the control cabinet....217
6 Motor cables....218
6.1 Assembly example (module-side) of a 1.5 mm² motor cable....218

**Chapter 4 Dimensioning....221**
1 Power mains connection....221
1.1 General information....221
1.1.1 Mains configurations....221
1.1.2 Supply voltage range....222
1.1.3 Protective ground connection (PE)....222
1.2 Dimensioning....224
1.2.1 Individual ACOPOS power mains connections....224
1.2.2 Implementing ACOPOS power mains connections for drive groups....227
1.3 Fault current protection....229
1.3.1 Rated fault current....229



Provided by Industrial Automation Co. • www.industrialautomationco.com • Parts & Repair: 877-727-8757

1.3.2 Estimating the discharge current....229
1.3.3 Manufacturer used....229
2 DC bus....230
2.1 General information....230
2.2 Wiring design....231
2.3 Equal distribution of the applied power via the power rectifiers....231
2.4 Equal distribution of the brake power on the braking resistors....232
2.5 Connecting external DC bus power supplies....232
3 Motor connection....233
3.1 Motor overload protection....234
4 Braking resistors....235
4.1 General information....235
4.2 External braking resistor connections....236
4.2.1 Fuse protection....236
4.3 Dimensioning the braking resistor....237
4.3.1 Basis of the calculation....237
4.3.2 Example....240
4.4 Configuring brake resistor parameters....247
4.4.1 Using the integrated braking resistors....247
4.4.2 Using external braking resistors....247
5 Configuring ACOPOS servo drives....248
5.1 Maximum power output for all slots on the ACOPOS servo drive....248
5.2 24 VDC current requirements for the ACOPOS servo drive....249
6 Dimensioning cooling systems for cooling control cabinets....250
6.1 General dimensioning criteria....250
6.1.1 Basic selection of the cooling system....250
6.2 Natural convection....251
6.2.1 Dimensioning....251
6.2.2 Example....251
6.3 Filter fans....252
6.3.1 Dimensioning....252
6.3.2 Example....253
6.4 Air/air heat exchangers....254
6.4.1 Dimensioning....254
6.4.2 Example....254
6.5 Air/water heat exchangers / Cooling units....256
6.5.1 Dimensioning....256
6.5.2 Example....256
7 Formula variables used....258

**Chapter 5 Wiring....260**
1 General information....260
1.1 EMC-compatible installation....260
1.1.1 General information....260
1.1.2 Installation guidelines....260
1.2 Insulation and high voltage testing....264
1.2.1 Insulation resistance testing in accordance with EN 60204....264
1.2.2 High voltage testing....264
1.3 Connecting cables to plug-in modules....265
1.4 Overview of clampable cross sections....266

**Chapter 6 Safety technology....267**
1 Standard safety technology ("hardwired safety technology")....267
1.1 General information....267
1.2 Principle - Implementing the safety function....268
1.2.1 Additional function....269
1.3 Enable input connected in accordance with Safety Category 3 / SIL 2 / PL d....270



Provided by Industrial Automation Co. • www.industrialautomationco.com • Parts & Repair: 877-727-8757

1.3.1 STO, Category 3 / SIL 2 / PL d (Variant A)....270
1.3.2 STO, Category 3 / SIL 2 / PL d (Variant B)....271
1.4 Enable input circuits in accordance with Safety Category 3 / SIL 2 / PL d and functionality (STO, SS1, SS2, SLS, SOS)....272
1.4.1 STO, SLS, SOS - Safety Category 3 / SIL 2 / PL d....272
1.4.2 SS1, SLS, SS2 - Safety Category 3 / SIL 2 / PL d (Variant A)....274
1.4.3 SS1, SLS, SS2 - Safety Category 3 / SIL 2 / PL d (Variant B)....276

**Chapter 7 International and national certifications....279**
1 Marks....279
2 EU directives and standards (CE)....280
2.1 Overview of standards....282
2.2 Requirements for immunity to disturbances....283
2.2.1 High-frequency interference....284
2.2.2 Low-frequency interference....285
2.3 Emission requirements....286
2.4 Mechanical conditions....287
2.5 Climate conditions....288
2.6 Electrical safety....288
3 UL / CSA....289
4 EAC....289
5 KC....289
6 Standards and definitions for safety technology....290

**Appendix A Accessories included in delivery....293**
1 ACOPOS....293
1.1 8V1010.0xx-2/8V1016.0xx-2....293
1.2 8V1010.5xx-2/8V1016.5xx-2....294
1.3 8V1022.xxx-2/8V1045.xxx-2/8V1090.xxx-2....295
1.4 8V1180.xxx-2/8V1320.xxx-2....296
1.5 8V1640.xxx-2....297
1.6 8V128M.xxx-2....298

**Appendix B UL marks....299**

**Appendix C Servo drive cable assignments....300**
1 Motors....300
1.1 8LS motors....300
1.2 8LV motors....301
1.3 8JS motors....301
1.4 8KS motors....302
1.5 8LT motors....302

**Appendix D Forming DC bus capacitors....303**



Provided by Industrial Automation Co. • www.industrialautomationco.com • Parts & Repair: 877-727-8757

# Chapter 1 • General information

## 1 Manual history

### Information:

**B&R makes every effort to keep user's manuals as current as possible.
From a safety point of view, however, the current version must be downloaded from the B&R website (www.br-automation.com).**

| Version | Date | Comment |
|---|---|---|
| 2.10 | 2020-03-09 | Changes / New features<br>• Adapted figures for translation and help documentation.<br>• Chapter "General information"<br>- Safety notices: Added new section "Security concept".<br>• Chapter "Technical data":<br>- Revised and updated servo drive data.<br>- Updated data plug-in modules.<br>- Removed plug-in modules 8AC112.60-1, 8AC140x and 8AC141x from the manual.<br>- Revised and updated wiring and pinouts.<br>- Cables: Updated cross sections and revised data.<br>- Added cable extensions.<br>• Chapter "Dimensioning":<br>- Revised section "Formula symbols used".<br>• Completely revised chapter "Standards and certifications".<br>• Added annex:<br>- UL marks<br>- ACOPOS cable assignments<br>- Forming DC bus capacitors |
| 2.01 | 11/5/2014 | Changes / New features<br>• Adjusted images for translation.<br>• Updated accessories for 8AC114.60-2.<br>• Technical data chapter:<br>- Corrected technical data for connectors.<br>- Added battery module.<br>• Dimensioning chapter:<br>- Revised "Dimensioning the power mains and fuse" section.<br>- Added section "Motor cables - Not for use in cable drag chains" to "Motor connection".<br>• Updated appendix "Accessories included in delivery". |
| 2.00 | 12/12/2012 | Changes / New features<br>• Plug-in module 8AC126.60-1 added:<br>- Order data<br>- Technical data<br>- Pinout<br>• 0.75 mm² motor cables added:<br>- Order data<br>- Technical data<br>• Dimensioning chapter:<br>- Using a mains choke added<br>- Dimensioning cooling systems updated |
| 1.43 | 26-Mar-11 | Changes / New features<br>• Safety notices:<br>New section "Specifications for functional safety" added<br>• Safety technology:<br>Safety functions/parameters modified, proof test interval changed to 20 years |
| 1.42 | 31-Jul-10 | Changes / New features<br>• Technical data / 8Vxxxx:<br>Heat dissipation values modified<br>• Wiring / AC121:<br>Input/Output circuit diagram added.<br>• Plug-in module 8AC125.60-1 added:<br>- Technical data<br>- Wiring<br>• Indicators:<br>LED status adjusted to firmware > V2.130<br>• Technical data / 8AC122.60-3:<br>ParIDs for setting the gear ratio added to footnote |
| 1.41 | 31-Oct-08 | Start of revision history publication |

Table 1: Manual history

# 2 ACOPOS

## 2.1 High-performance servo drive design

The ACOPOS servo drive family is an important component of the complete automation solutions provided by B&R. Industry-specific functions and intuitive tools form the basis for short development times.

An important criteria for the performance of an automation solution is fast and precise reactions to events handled the application or to immediate changes in the production process. Because of this, ACOPOS servo drives work with very short sampling times and communication cycles of 400 µs, which only amount to 50 µs in the control loop.

## 2.2 More room for innovation

The successful application of ACOPOS servo drives in the following fields demonstrates the impressive innovative power of their pioneering design: performance and function coupled with ease of use.

- Packaging industry
- Handling technology
- Plastics processing
- Paper and printing
- Textile industry
- Wood industry
- Metalworking industry
- Semiconductor industry

## 2.3 Maximum safety

The ACOPOS servo family was thoroughly tested during the development phase. Under difficult conditions, such as heavy vibrations or increased temperatures, the devices were subject to loads that greatly exceed the values that occur in normal everyday operation.




Figure 1: EMC testing of ACOPOS servo drives - maximum security for the user

EMC was given special attention to facilitate use in a harsh industrial environments. Field tests have been carried out under difficult conditions in addition to the tests defined in the standard. The results confirm the excellent values measured by the testing laboratory and during operation. The necessary filters, which meet CE guidelines, are also integrated in the device. Using computer-aided models, the thermal behavior of the entire system is pre-calculated based on measured currents and temperatures. This results in maximum performance by taking advantage of the system's full capabilities. ACOPOS servo drives use the information on the motor's embedded parameter chip, which contains all relevant mechanical and electronic data. The work-intensive and error-prone task of manually setting parameters is no longer necessary and start-up times are substantially reduced. During service, relevant data can be requested and the cause of any problems that may exist can be determined.

The ACOPOS servo family is also available with partially-coated circuit boards. These versions are – with identical specifications – more robust in regard to environmental influences such as dust, aggressive vapors or moisture.

## 2.4 Modular and precise with communication options

The I/O channels needed to operate a servo axis are part of the standard equipment for ACOPOS servo drives. The user is provided two trigger inputs for tasks requiring precise measurements or registration mark control.




Figure 2: Plug-in modules allow optimized, application-specific configuration of ACOPOS servo drives

Further configuration of the ACOPOS servo drive to meet the respective application-specific demands takes place using plug-in modules. Plug-in modules are available to establish network connections with other drives, controllers and visualization devices as well as for the connection of encoders, sensors and actuators. Additionally, CPU modules for controller and drive integration are also available for drive-based automation.

## 2.5 Configuring instead of programming

ACOPOS servo drives can be configured for demanding positioning tasks such as electronic gears or cam profiles. Based on long-term cooperation with customers from all over the world, B&R shares its know-how in the form of compact function blocks for many applications. Industry-specific functionality can be quickly and easily implemented in an application program.

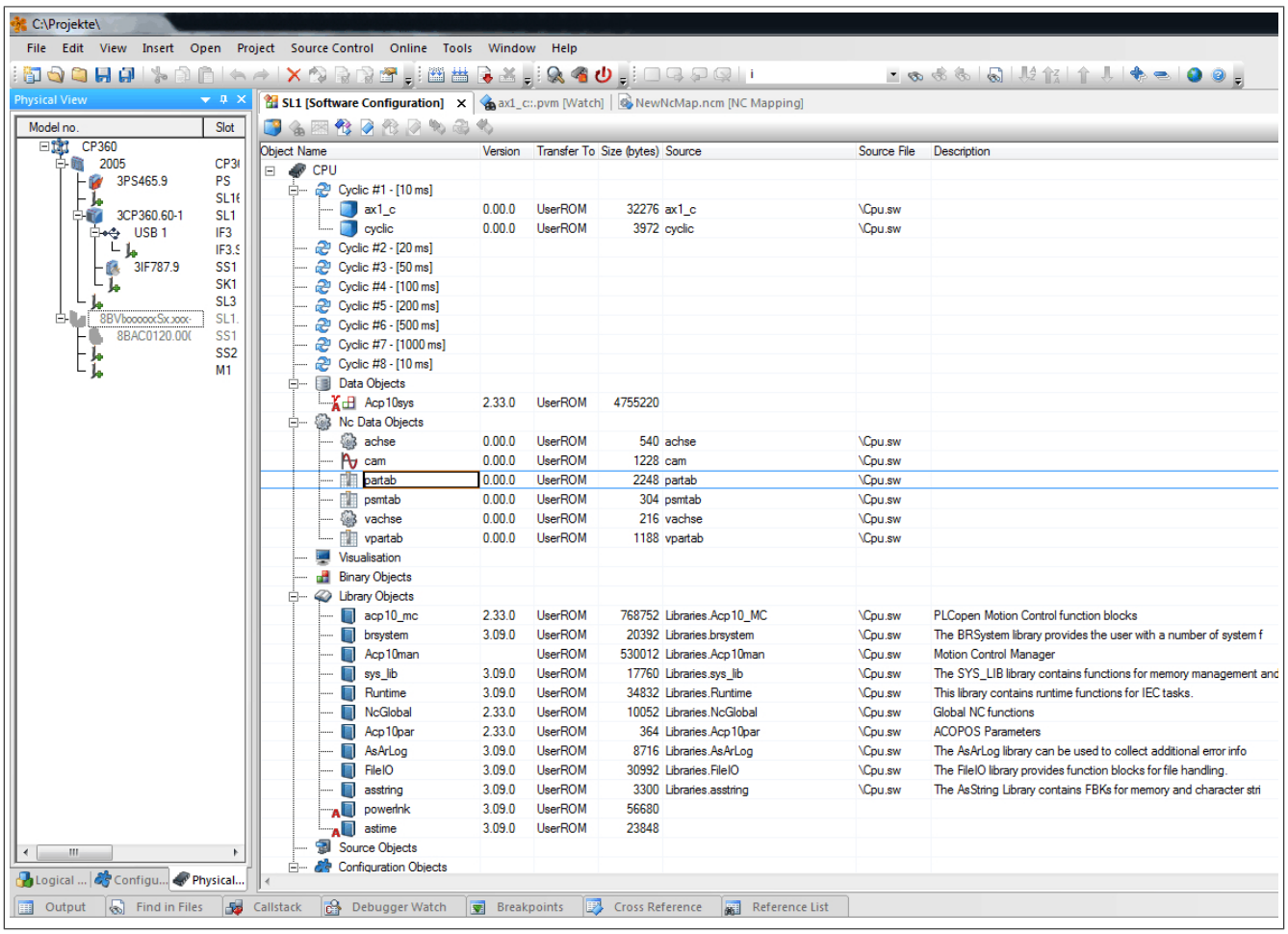


Figure 3: Configuring ACOPOS servo drives using B&R Automation Studio guarantees fast and easy implementation of application requirements

## 2.6 PLCopen motion control function blocks

Motion control is one of the central topics in automation technology. This is due in part to the fact that this area bears a relatively high share of the costs of an entire automation solution; as a result, the potential for savings are high as well.

PLCopen motion control function blocks comply with the IEC 61131-3 standard and support users in this endeavor by offering vendor-independence and reducing overall development times. Additional support is provided through the use of a wide variety of programming languages, including Ladder Diagram (LD), Structured Text (ST) and the high-level language C.

The functionality provided by these function blocks can be broken down into single- and multi-axis movements. In addition to traditional absolute and relative movements, the first of these two groups also includes the possibility of overlapping movements. Multi-axis movements provide support for gear, cam profile, up/down synchronization and compensation gear (i.e. changing the phase angle) functions.

## 2.7 Higher productivity with Smart Process Technology

Smart Process Technology meets customer needs for cost-effective solutions and high production speeds. This freely configurable technology library is uniformly integrated into existing motion control products.

The use of indirect process parameters makes it possible to eliminate sensors, which are often not fast enough to keep up with high production speeds. Synchronous processing and short response times make it possible to achieve excellent productivity and precision. In addition, powerful and intelligent decentralized units allow seamless quality control. In the field, this significantly reduces cycle times while improving component quality.

As a result, the demands placed on advanced motion control components – high product quality, machine productivity, short maintenance and down times and, increasingly important, seamless quality control during production – are met completely.

## 2.8 ACOPOS – Perfect for CNC applications as well

The integrated Soft CNC system from B&R combines all of the software components necessary for machine automation on a 64-bit processing platform and provides more than enough computing power to handle complex processing machines. Its integrated system architecture, used together with ACOPOS servo drives, opens up many opportunities with regard to response speed, data throughput and precision, all while providing a way to reduce overall costs.

- Uniformly integrated ACOPOS servo drive technology
- Powerful, with fast response times
- Ultimate freedom for automation concepts with unlimited PLC and CNC system flexibility
- 8 independent CNC channels
- Up to a total of 100 axes for positioning, CNC and electronic gears
- Customized graphical interface
- Nearly unlimited system memory for programs, diagnostics and process data
- Internet or intranet connection for inspections or remote maintenance

Leading manufacturers of water jet, laser and flame cutting machines are already utilizing these technological advantages.

## 2.9 Quick and easy commissioning

All B&R products are programmed in the same way using the Windows-based tool B&R Automation Studio. This software allows complex drive solutions to be created after just a short orientation period. Hardware components and program sections can be added and configured in dialog boxes, considerably reducing project development time.

Axis movements can be checked without programming using the NC Test feature. All types of motions, ranging from point-to-point movements to gear functions, can be carried out interactively. The response of an axis can even be monitored while the system is online. In addition, Trace functionality records relevant drive data for clear evaluation at any time.

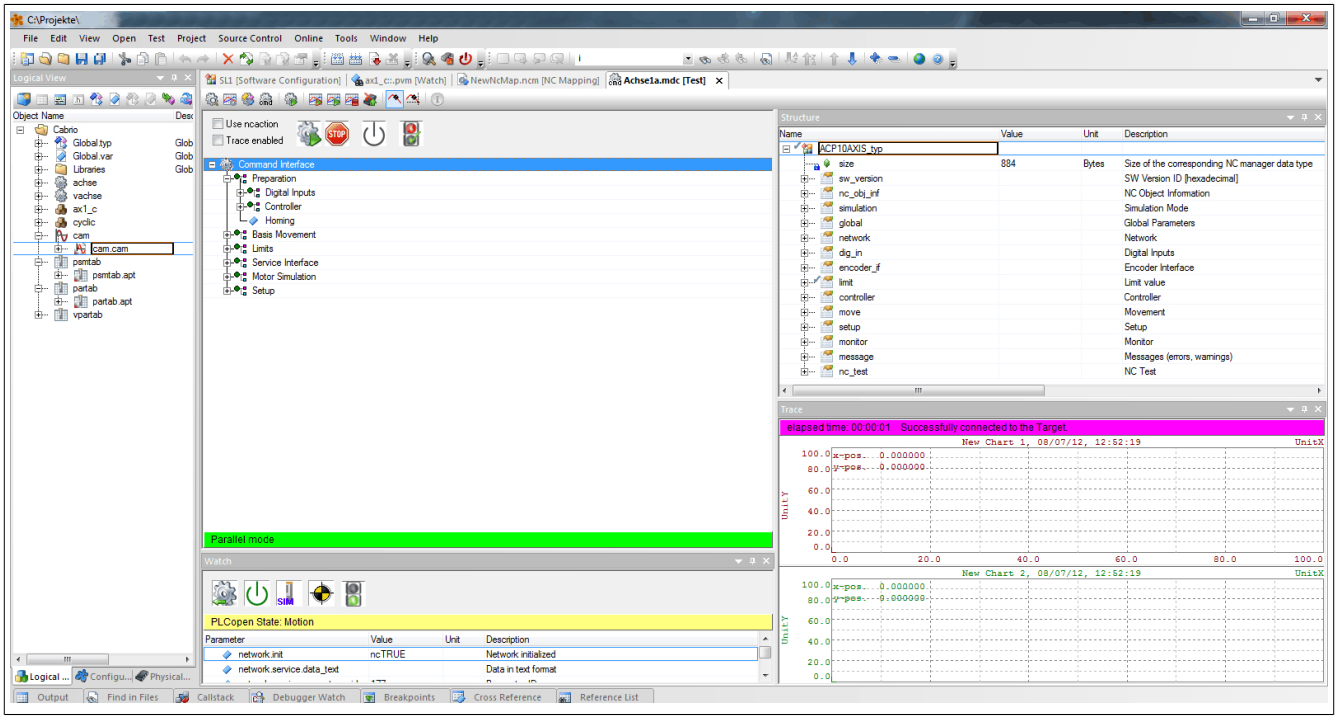


Figure 4: Optimal control of the movement using NC Test and Trace functionality

## 2.10 Tools for straightforward and efficient diagnostics

Drives are monitored in real time using an oscilloscope function, with a wide variety of trigger options able to generate informative data for analyzing movements during operation. A graphic display allows the user to make fine adjustments and optimize movements in the microsecond range. The integration of powerful tools such as the cam editor reduces programming for complex coupled movements to simple drag-and-drop procedures. The results and effects on speed, acceleration and jolt can be immediately analyzed in graphic form.

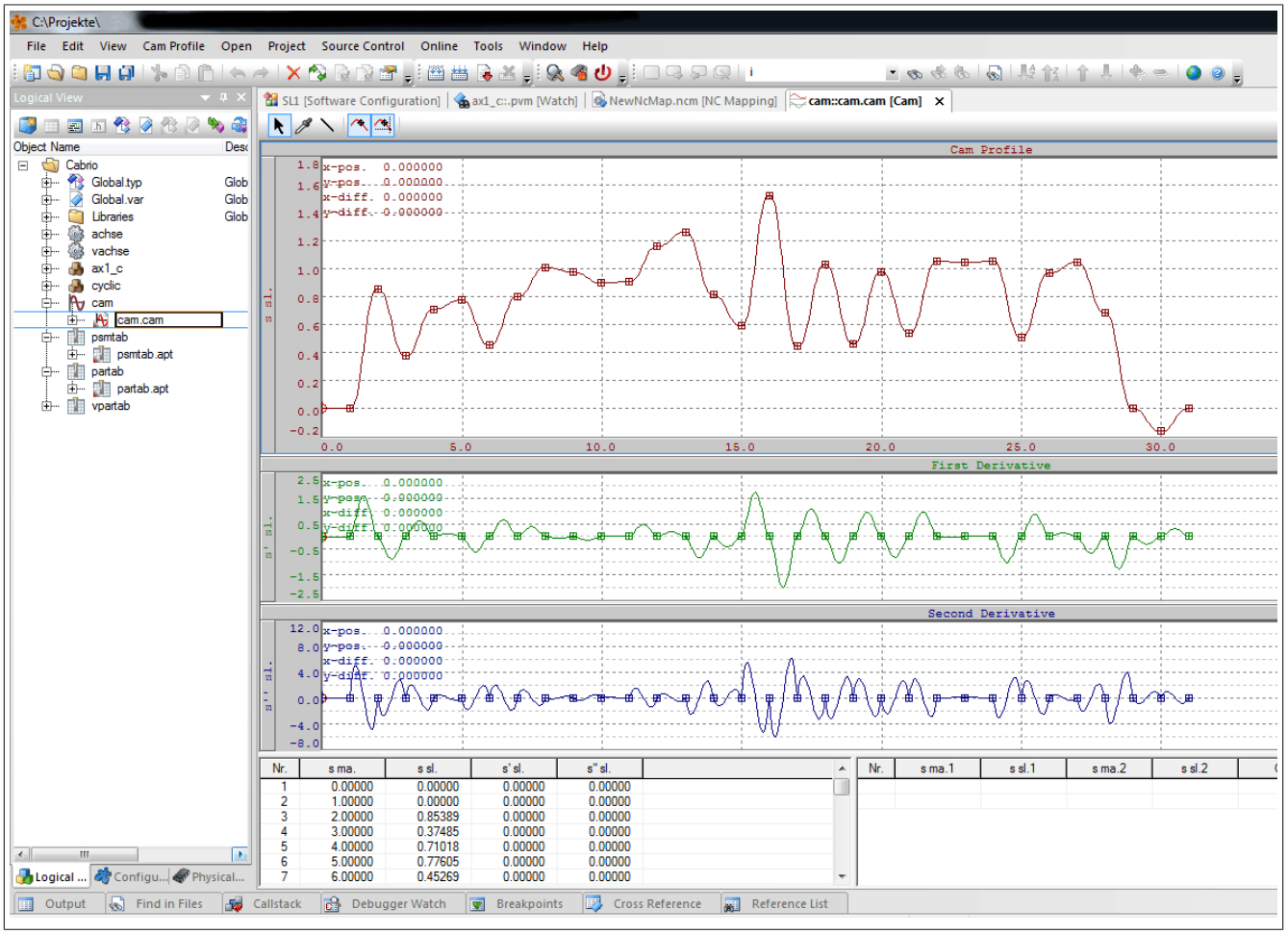


Figure 5: Cam editor - for creating movement profiles simply and precisely

# 3 ACOPOS configurations

ACOPOS servo drives have access to multiple technology-specific functions whose performance, flexibility and capability have been remarkably proven in countless applications. The ACOPOS functions listed below are basic functions that the user can switch between as needed within 400 µs. In addition, manipulations such as changes in product length, registration mark control, overlying torque control, brief process adaptations and quality checks can be carried out at any time.

- Point-to-point movements
- Electronic gears
- Electronic differential gears
- Cutting units
- Electronic cam profiles
- Flying saws
- Line shafts
- CNC

ACOPOS servo drives can be used in various configurations depending on the network type and the requirements of the application. The functions listed above are available to the user in each of the topology examples shown.

Response speeds are not influenced by the network and control system being used if technology functions are processed directly on the ACOPOS servo drive. Additional sensors and actuators must be integrated in the control system for more complex processes. In these cases, the level of performance depends mostly on the type of network and control system being used.

The topology examples shown on the following pages provide an overview of the bandwidths that are possible with B&R automation components.

## 3.1 ACOPOS in a POWERLINK network

High-performance machine architectures require flexible networks and fieldbuses. With POWERLINK, a network is available to the user that fully meets the high demands of dynamic motion systems. POWERLINK adapts to the requirements of the machine and the system. The rigid coupling of many axes with controllers, industrial PCs, I/O systems and operator panels allows machines and systems to be created with the highest level of precision. Compatibility to standard Ethernet also reduces the number of networks and fieldbuses on the machine level.

**Successful areas of use for these topologies:**

- Packaging industry
- Handling technology
- Plastics processing
- Paper and printing
- Textile industry
- Wood industry
- Metalworking industry
- Semiconductor industry

### 3.1.1 Recommended topology for POWERLINK networks

In the POWERLINK network (seen from the manager), the tree structure should always come first followed by the line structure. Otherwise, the line structure delay affects the entire tree beneath it.

## Information:

**It should be noted that the longest path is allowed a maximum of 10 hubs by the manager.**

## Information:

**Communication to all POWERLINK stations connected to the POWERLINK network in a line-formed network via the mini-hub of this ACOPOS servo drive is interrupted during the network initialization (startup) of an ACOPOS servo drive.**

### 3.1.2 Further literature

Unless otherwise stated, the recommendations in the following documents apply:

- "Industrial Ethernet Planning and Installation Guide", Draft 2.0, IAONA (www.iaona-eu.com)
- "Guide to Understanding and Obtaining High Quality Generic Cabling", 3P Third Party Testing (www.3ptest.dk)

## 3.2 Compact, modular motion control applications

All ACOPOS servo drives serve as a mini-hub for cabling and allow line-formed routing of the POWERLINK network. This considerably reduces the cabling expenditure (without reducing functionality).

- Modular machine architectures with up to 100 m between individual axes
- Minimal wiring required due to line structure (no ring)
- No additional infrastructure components needed
- Synchronization from the PLC program to the drive control loop

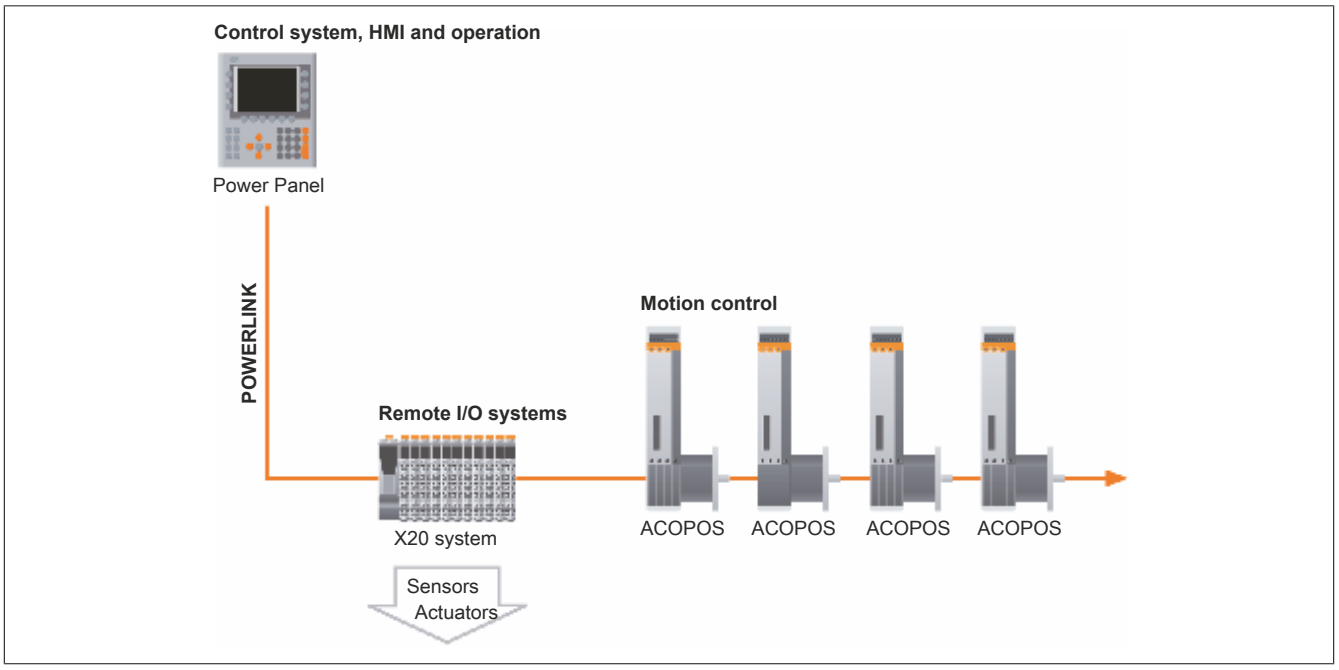


Figure 6: Compact, modular motion control applications

## 3.3 Extensive, modular motion control applications with up to 253 axes

ACOPOS servo drives are connected to the POWERLINK network in star topologies using hubs and line topologies.

- Modular machine architectures with up to 100 m between individual axes
- Optimized wiring using a mixed star/line structure
- Nodes with fast and slow sampling rates operable within a single network, eliminating the need to divide the network into fast and slow segments
- Synchronization from the PLC program to the drive control loop

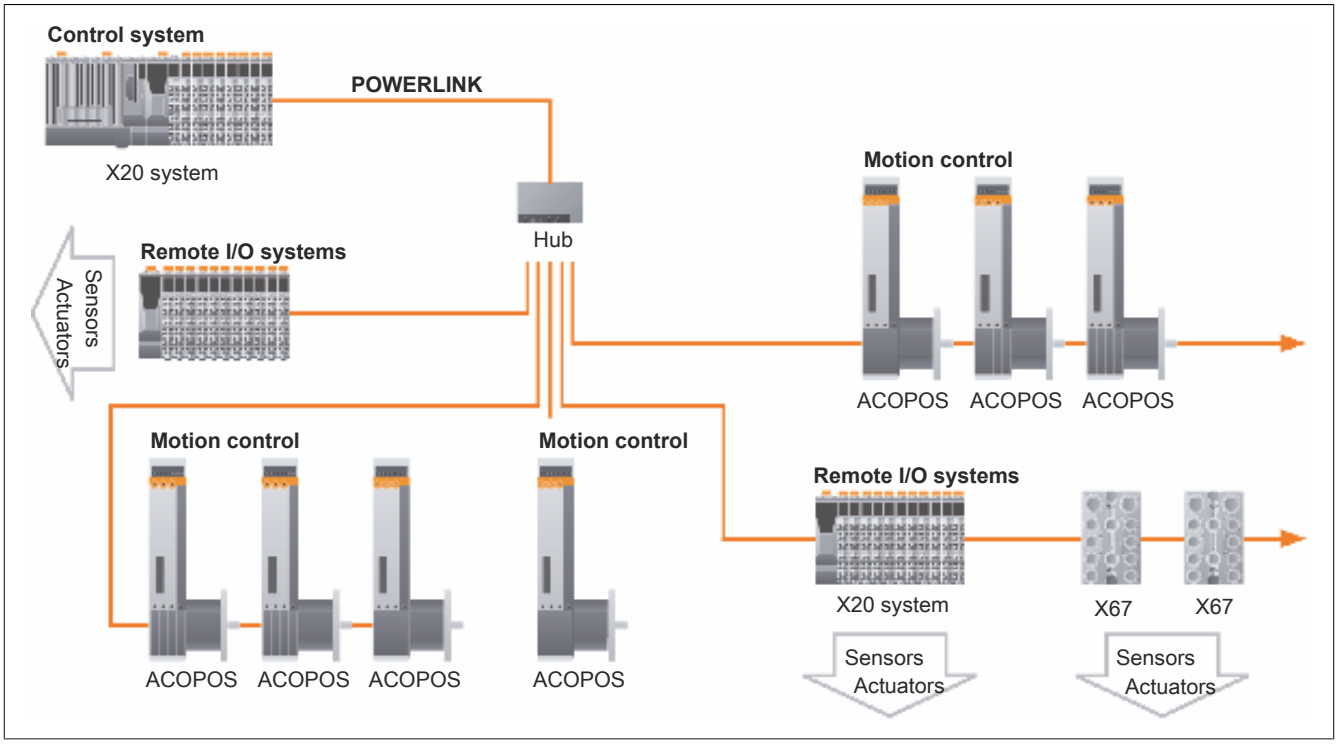


Figure 7: Extensive, modular motion control applications with up to 253 axes

## 3.4 ACOPOS in a CAN bus network

The dynamic requirements for small and mid-sized machines with several axes can be handled efficiently using a CAN bus.
The CAN bus is a cost-effective fieldbus for networking ACOPOS servo drives with controllers, industrial PCs, I/O systems and operator panels.

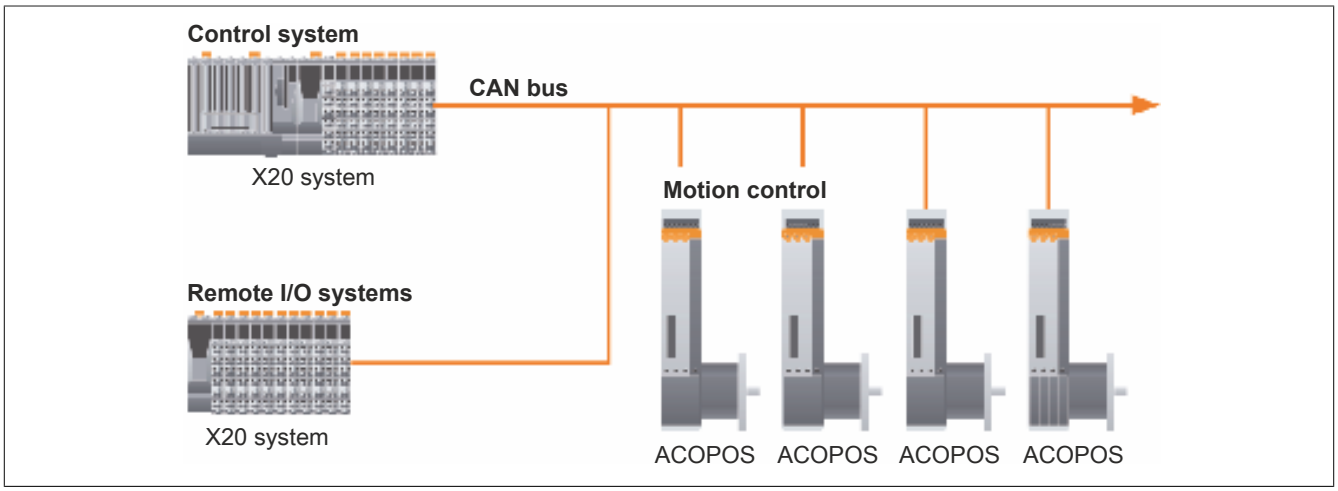


Figure 8: ACOPOS in a CAN bus network

## 3.5 Drive-based control

The controller is located centrally on an ACOPOS servo drive. The drives are networked and synchronized with each other via the CAN bus. As a result, electronic gear and cam profile applications as well as CNC applications are possible in addition to simple point-to-point movements. Powerful operation and visualization is managed by the controller in the ACOPOS servo drive. I/O signals are connected in the control cabinet or directly in the machine room. By eliminating the need for an external controller, even very limited space can be used optimally.

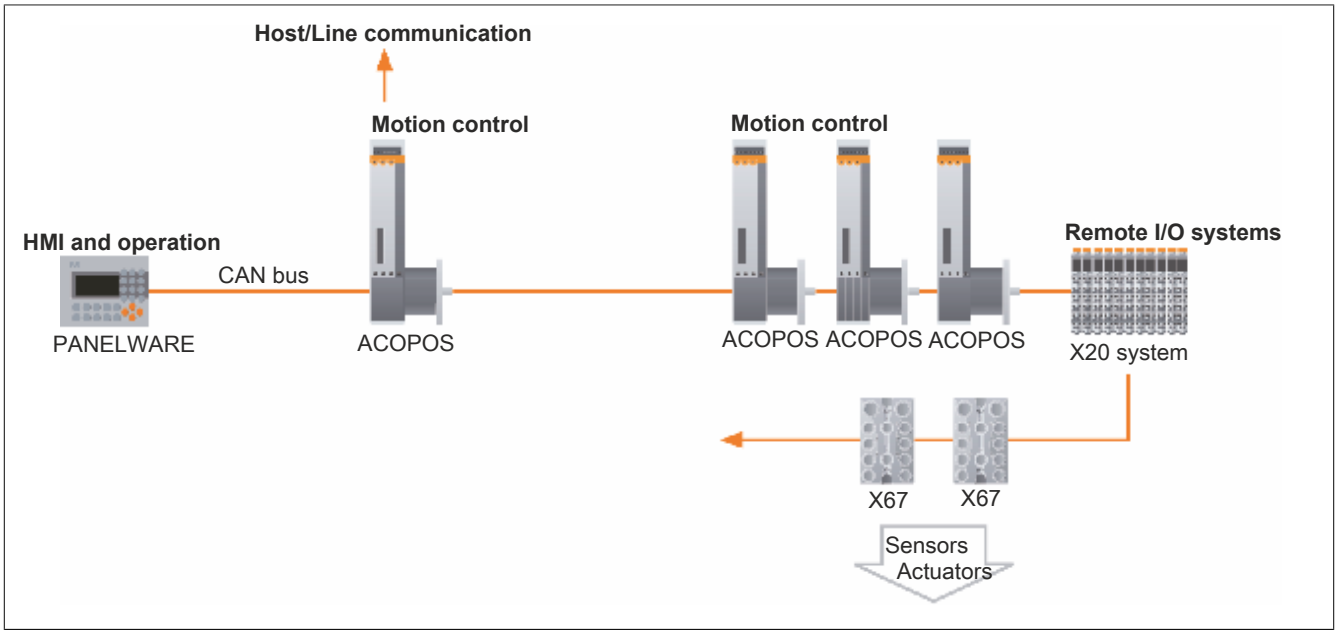


Figure 9: Drive-based automation with ACOPOS

# 4 Safety guidelines

## 4.1 Organization of notices

### Safety notices

Contain **only** information that warns of dangerous functions or situations.

| Signal word | Description |
|---|---|
| **Danger!** | Failure to observe these safety guidelines and notices will result in death, severe injury or substantial damage to property. |
| **Warning!** | Failure to observe these safety guidelines and notices can result in death, severe injury or substantial damage to property. |
| **Caution!** | Failure to observe these safety guidelines and notices can result in minor injury or damage to property. |
| **Notice!** | Failure to observe these safety guidelines and notices can result in damage to property. |

### General notices

Contain **useful** information for users and instructions for avoiding malfunctions.

| Signal word | Description |
|---|---|
| **Information:** | Useful information, application tips and instructions for avoiding malfunctions. |

## 4.2 General information

B&R servo drives and servo motors have been designed, developed and manufactured for conventional use in industrial environments. They were not designed, developed and manufactured for any use involving serious risks or hazards that could lead to death, injury, serious physical damage or loss of any kind without the implementation of exceptionally stringent safety precautions. In particular, such risks and hazards include the use of these devices to monitor nuclear reactions in nuclear power plants, their use in flight control or flight safety systems as well as in the control of mass transportation systems, medical life support systems or weapons systems.

Servo drives, inverter modules and frequency inverters from B&R are not dual-use goods per appendix I of Council Regulation (EC) No. 428/2009 | 3A225, amended by Commission Delegated Regulation (EU) No. 2015/2420.
The electrical output frequency of these modules is monitored; if the limit frequency is exceeded, the current movement is aborted and an error is reported.

### Danger!

**Drive systems and servo motors can have exposed parts with voltages applied (e.g. terminals) or hot surfaces. Additional hazards include moving machine parts. The removal of required covers, inappropriate use of the devices or their improper installation or operation can result in severe personal injury or damage to property.**

All tasks such as the transport, installation, commissioning and servicing of devices are only permitted to be carried out by qualified personnel. Qualified personnel are persons who are familiar with the transport, installation, assembly, commissioning and operation of the product and have the appropriate qualifications for their job. National accident prevention regulations must be observed.

The safety notices, connection descriptions (type plate and documentation) and limit values listed in the technical data are to be read carefully before installation and commissioning and must be observed.

## 4.3 Intended use

Servo drives are components designed to be installed in electrical systems or machines. They are not permitted to be used unless the machine meets directive 2006/42/EC (machine directive) as well as directive 2004/108/EC (EMC directive).

Servo drives are only permitted to be operated directly on grounded, three-phase industrial power system (TN, TT power system). When used in residential areas, commercial areas or small businesses, additional filtering measures must be implemented by the user.

### Danger!

**Servo drives are not permitted to be operated directly on IT and TN-S mains with a grounded phase conductor and protective ground conductor!**

Technical data as well as connection and environmental specifications can be found on the type plate and in this user's manual. These specifications regarding connection and environmental conditions must be observed!

### Danger!

**Electronic devices are never completely failsafe. If the servo drive fails, the user is responsible for ensuring that the connected motor is brought to a secure state.**

## 4.4 Protection against electrostatic discharge

Electrical components that can be damaged by electrostatic discharge (ESD) must be handled accordingly.

### 4.4.1 Packaging

Electrical components with a housing do not require special ESD packaging but must be handled properly (see section 4.4.2 "Guidelines for proper ESD handling" on page 21).

Electrical components without a housing are protected by ESD-suitable packaging.

### 4.4.2 Guidelines for proper ESD handling

**Electrical components with a housing**

- Do not touch the connector contacts on connected cables.
- Do not touch the contact tips on circuit boards.

**Electrical components without a housing**

The following points apply in addition to the points listed under "Electrical components with a housing":

- Any persons handling electrical components or devices with installed electrical components must be grounded.
- Components are only permitted to be touched on their narrow sides or front plate.
- Components must always be placed on or stored in a suitable medium (ESD packaging, conductive foam, etc.).
  Metallic surfaces are not suitable storage surfaces!
- Components must not be subjected to electrostatic discharge (e.g. caused by charged plastics).
- Observe a minimum distance of 10 cm from monitors and television sets.
- Measuring instruments and equipment must be grounded.
- Probe tips of galvanically isolated measuring instruments must be temporarily discharged on suitably grounded surfaces before taking measurements.

**Individual components**

- ESD protective measures for individual components are thoroughly implemented at B&R (conductive floors, footwear, arm bands, etc.).
- These special ESD protection measures for individual components are not necessary for customers handling B&R products.

## 4.5 Transport and storage

During transport and storage, devices must be protected against undue stress (mechanical loads, temperature, humidity, aggressive atmospheres, etc.).

Servo drives contain components sensitive to electrostatic charges that can be damaged by inappropriate handling. It is therefore necessary to provide the required protective measures against electrostatic discharge when installing or removing these servo drives.

## 4.6 Installation

Installation must be performed according to this documentation using suitable equipment and tools.

Devices may only be installed by qualified personnel without voltage applied. Before installation, voltage to the control cabinet must be switched off and prevented from being switched on again.

General safety guidelines and national accident prevention regulations (e.g. VBG 4) for working with high voltage systems must be observed.

Electrical installation must be carried out according to applicable guidelines (e.g. line cross sections, fuses, protective ground connections, see also see "Dimensioning" on page 221).

## 4.7 Operation

### 4.7.1 Protection against touching electrical parts

> **Danger!**
>
> **To operate servo drives, it is necessary for certain parts to carry dangerous voltages over 42 VDC. Touching one of these parts can result in a life-threatening electric shock. This could lead to death, severe injury or damage to equipment.**

Before turning on a servo drive, it is important to ensure that the housing is properly connected to ground (PE rail). The ground connection must be established even when testing the drive or operating it for a short time!

Before turning the device on, all parts that carry voltage must be securely covered. During operation, all covers and control cabinet doors must remain closed.

> **Danger!**
>
> **If the safety functions integrated in the drive system are used in an application, then they must be fully validated before the drive system is switched on for the first time. This could lead to death, severe injury or damage to property.**

Control and power connections can still carry voltage even if the motor is not turning. Touching these connections when the device is switched on is prohibited.Before performing any work on servo drives, they must first be disconnected from the power mains and prevented from being switched on again.

> **Danger!**
>
> **After switching off the servo drive, wait until the DC bus discharge time of at least five minutes has passed. The voltage currently on the DC bus must be measured between -DC1 and +DC1 with a suitable measuring device before beginning work. This voltage must be less than 42 VDC to rule out danger. An unlit Run LED does not indicate that voltage is not present on the device!**

Servo drives are labeled with the following warning:

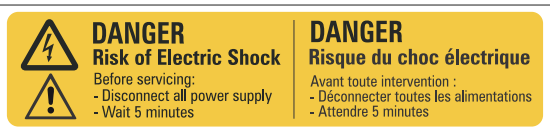


Figure 10: Warning on the servo drive

The connections for servo drive signal voltages ranging from 5 to 30 V are safely isolated circuits. The signal voltage connections and interfaces are therefore only permitted to be connected to devices or electrical components that have sufficient isolation in accordance with IEC 60364-4-41 or EN 61800-5-1 and that correspond to SELV / PELV or a class DVC A safety extra low voltage in accordance with EN 61800-5-1.

Never remove the electrical connections from the servo drive with voltage applied. In some cases, electric arcs may occur that can cause personal injury and/or damage to contacts.

### 4.7.2 Protection against hazardous movements

## Danger!

**Improper control of motors can result in unintended hazardous movements! Such incorrect behavior can have various causes:**

- **Incorrect installation or a mistake when handling components**
- **Improper or incomplete wiring**
- **Defective devices (servo drive, motor, position encoder, cables, brake)**
- **Incorrect control (e.g. caused by software error)**

Some of the errors listed above can be detected and prevented by the servo drive's internal monitoring. Nevertheless, it is still possible for the motor shaft to move any time the device is switched on! For this reason, higher-level safety precautions need to be put in place to ensure that personnel and machines are protected.

The moving parts on machines must be shielded in such a way as to prevent unintentional access by personnel. This type of protection can be achieved by using stable mechanical protective equipment such as protective covers, protective fences, protective gates or light barriers.

Removing, bypassing or circumventing these safety measures and entering the area where movement takes place is prohibited.

A sufficient number of emergency stop switches must be installed in direct proximity to the machine and be easily accessible at all times. This emergency stop equipment must be checked before the machine is commissioned.

On free running motors, the shaft key (if present) must be removed or measures taken to prevent its ejection.

The holding brake built into motors cannot prevent hoisting equipment from dropping hanging loads.

### 4.7.3 Protection against burns

The surfaces of servo drives and servo motors can reach very high temperatures during operation.

Servo drives are therefore labeled with the following warning:



Figure 11: Warning on the servo drive

## 4.8 Characteristic values for functional safety

Characteristic values for functional safety are listed in chapter "Safety technology".

Characteristic values are calculated based on a proof test interval of maximum 20 years. Since a proof test cannot be carried out for B&R drive systems, the proof test interval is the same as the system's mission time.

Per the EN ISO 13849, EN 62061 and IEC 61508 standards, the safety functions described in section "Safety technology" cannot be used beyond the specified mission time.

### Danger!

**The user must ensure that all B&R drive systems that execute a safety function are replaced by new B&R drive systems or removed from operation before their mission time expires.**

## 4.9 Environmentally friendly disposal

All B&R drive systems and servo motors are designed to inflict as little harm as possible on the environment.

### 4.9.1 Separation of materials

It is necessary to separate out the different materials so that devices can undergo an environmentally friendly recycling process.

| Component | Disposal |
|---|---|
| Drive systems, servo motors, cables | Electronic recycling |
| Cardboard/Paper packaging | Paper/Cardboard recycling |

Table 2: Environmentally friendly separation of materials

Disposal must take place per applicable legal regulations.

## 4.10 Security concept

B&R products communicate via a network interface and were developed for integration into a secure network. The network and B&R products are affected by the following hazards (not a complete list):

- Unauthorized access
- Digital intrusion
- Data leakage
- Data theft
- A variety of other types of IT security breaches

It is the responsibility of the operator to provide and maintain a secure connection between B&R products and the internal network as well as other networks, such as the Internet, if necessary. The following measures and security solutions are suitable for this purpose:

- Segmentation of the network (e.g. separation of the IT and OT networks)
- Firewalls for the secure connection of network segments
- Implementation of a security-optimized user account and password concept
- Intrusion prevention and authentication systems
- Endpoint security solutions with modules for anti-malware, data leakage prevention, etc.
- Data encryption

It is the responsibility of the operator to take appropriate measures and to implement effective security solutions.

B&R Industrial Automation GmbH and its subsidiaries are not liable for damages and/or losses resulting from, for example, IT security breaches, unauthorized access, digital intrusion, data leakage and/or data theft.

Before B&R releases products or updates, they are subjected to appropriate functional testing. Independently of this, the development of customized test processes is recommended in order to be able to check the effects of changes in advance. Such changes include, for example:

- Installation of product updates
- Notable system modifications such as configuration changes
- Import of updates or patches for third-party software (non-B&R software)
- Hardware replacement

These tests should ensure that implemented security measures remain effective and that systems behave as expected.

Provided by Industrial Automation Co. • www.industrialautomationco.com • Parts & Repair: 877-727-8757

# Chapter 2 • Technical data



## 1 Module overview

### ACOPOS 1010, 1016

| Model number | Short description | Page |
|---|---|---|
| | **Servo drives** | |
| 8V1010.00-2 | ACOPOS servo drive, 3x 400-480 V, 1.0 A, 0.45 kW, line filter, braking resistor and electronic secure restart inhibit integrated | 33 |
| 8V1010.001-2 | ACOPOS servo drive, 3x 400-480 V, 1.0 A, 0.45 kW, coated, line filter, integrated braking resistor and electronic secure restart inhibit | 33 |
| 8V1010.50-2 | ACOPOS servo drive, 3x 110-230 V / 1x 110-230 V, 2.0 A, 0.45 kW, line filter, braking resistor and electronic secure restart inhibit integrated | 37 |
| 8V1010.501-2 | ACOPOS servo drive, 3x 110-230 V / 1x 110-230 V, 2.3 A, 0.45 kW, coated, line filter, integrated braking resistor and electronic secure restart inhibit | 37 |
| 8V1016.00-2 | ACOPOS servo drive, 3x 400-480 V, 1.6 A, 0.7 kW, line filter, braking resistor and electronic secure restart inhibit integrated | 41 |
| 8V1016.001-2 | ACOPOS servo drive, 3x 400-480 V, 1.6 A, 0.7 kW, coated, line filter, integrated braking resistor and electronic secure restart inhibit | 41 |
| 8V1016.50-2 | ACOPOS servo drive, 3x 110-230 V / 1x 110-230 V, 3.6 A, 0.7 kW, line filter, integrated braking resistor and electronic secure restart inhibit | 45 |
| 8V1016.501-2 | ACOPOS servo drive, 3x 110-230 V / 1x 110-230 V, 3.6 A, 0.7 kW, coated, line filter, integrated braking resistor and electronic secure restart inhibit | 45 |

### ACOPOS 1022, 1045, 1090

| Model number | Short description | Page |
|---|---|---|
| | **Servo drives** | |
| 8V1022.00-2 | ACOPOS servo drive, 3x 400-480 V, 2.2 A, 1 kW, line filter, integrated braking resistor and electronic secure restart inhibit | 57 |
| 8V1022.001-2 | ACOPOS servo drive, 3x 400-480 V, 2.2 A, 1 kW, coated, line filter, integrated braking resistor and electronic secure restart inhibit | 57 |
| 8V1045.00-2 | ACOPOS servo drive, 3x 400-480 V, 4.4 A, 2 kW, line filter, braking resistor and electronic secure restart inhibit integrated | 61 |
| 8V1045.001-2 | ACOPOS servo drive, 3x 400-480 V, 4.4 A, 2 kW, coated, line filter, integrated braking resistor and electronic secure restart inhibit | 61 |
| 8V1090.00-2 | ACOPOS servo drive, 3x 400-480 V, 8.8 A, 4 kW, line filter, integrated braking resistor and electronic secure restart inhibit | 65 |
| 8V1090.001-2 | ACOPOS servo drive, 3x 400-480 V, 8.8 A, 4 kW, coated, line filter, integrated braking resistor and electronic secure restart inhibit | 65 |

### ACOPOS 1180, 1320

| Model number | Short description | Page |
|---|---|---|
| | **Servo drives** | |
| 8V1180.00-2 | ACOPOS servo drive, 3x 400-480 V, 19 A, 9 kW, line filter, braking resistor, DC bus power supply and electronic secure restart inhibit integrated | 75 |
| 8V1180.001-2 | ACOPOS servo drive, 3x 400-480 V, 19 A, 9 kW, coated, line filter, integrated braking resistor, DC bus power supply and electronic secure restart inhibit | 75 |
| 8V1320.00-2 | ACOPOS servo drive, 3x 400-480 V, 34 A, 16 kW, line filter, braking resistor, DC bus power supply and electronic secure restart inhibit integrated | 79 |
| 8V1320.001-2 | ACOPOS servo drive, 3x 400-480 V, 34 A, 16 kW, coated, line filter, integrated braking resistor, DC bus power supply and electronic secure restart inhibit | 79 |

### ACOPOS 1640, 128M

| Model number | Short description | Page |
|---|---|---|
| | **Servo drives** | |
| 8V128M.00-2 | ACOPOS servo drive, 3x 400-480 V, 128 A, 64 kW, line filter, integrated braking resistor, DC bus power supply and electronic secure restart inhibit | 94 |
| 8V128M.001-2 | ACOPOS servo drive, 3x 400-480 V, 128 A, 64 kW, coated, line filter, integrated braking resistor, DC bus power supply and electronic secure restart inhibit | 94 |
| 8V1640.00-2 | ACOPOS servo drive, 3x 400-480 V, 64 A, 32 kW, line filter, integrated braking resistor, DC bus power supply and electronic secure restart inhibit | 90 |
| 8V1640.001-2 | ACOPOS servo drive, 3x 400-480 V, 64 A, 32 kW, coated, line filter, integrated braking resistor, DC bus power supply and electronic secure restart inhibit | 90 |

## ACOPOS plug-in modules

| Model number | Short description | Page |
|---|---|---|
| | **Plug-in modules** | |
| 8AC110.60-3 | ACOPOS plug-in module, CAN interface | 105 |
| 8AC114.60-2 | ACOPOS plug-in module, POWERLINK V2 interface | 107 |
| 8AC120.60-1 | ACOPOS plug-in module, EnDat encoder and sine incremental encoder interface | 110 |
| 8AC121.60-1 | ACOPOS plug-in module, HIPERFACE interface | 114 |
| 8AC122.60-3 | ACOPOS plug-in module, resolver interface 10 kHz | 118 |
| 8AC123.60-1 | ACOPOS plug-in module, incremental encoder and SSI absolute encoder interface | 121 |
| 8AC125.60-1 | ACOPOS plug-in module, BiSS/SSI SinCos/SSI interface | 125 |
| 8AC125.60-2 | ACOPOS plug-in module, BiSS encoder interface 5 V, baud rate 6.25 Mbit/s | 128 |
| 8AC125.61-2 | ACOPOS plug-in module, BiSS encoder interface 12 V, baud rate 6.25 Mbit/s | 131 |
| 8AC126.60-1 | ACOPOS plug-in module, EnDat 2.2 encoder interface | 134 |
| 8AC130.60-1 | ACOPOS plug-in module, 8 digital I/O configurable in pairs as 24 V input or as output 400/100 mA, 2 digital outputs 2 A, order TB712 terminal block separately | 137 |
| 8AC131.60-1 | ACOPOS plug-in module, 2 analog inputs ±10 V, 2 digital I/Os configurable as 24 V input or output 45 mA, order terminal block TB712 separately! | 141 |

## 8AXB battery module

| Model number | Short description | Page |
|---|---|---|
| 8AXB000.0000-00 | 8AC126.60-1 accessory set for encoder buffering consisting of: Battery module with 3.6 V lithium battery | 145 |

## External 8B0W braking resistors

| Model number | Short description | Page |
|---|---|---|
| | **Braking resistors** | |
| 8B0W0045H000.000-1 | Braking resistor, 450 W, 50 R, IP20, terminals | 148 |
| 8B0W0045H000.001-1 | Braking resistor, 450 W, 50 R, IP65, terminals | 148 |
| 8B0W0079H000.000-1 | Braking resistor, 790 W, 33 R, IP20, terminals | 148 |
| 8B0W0079H000.001-1 | Braking resistor, 790 W, 33 R, IP65, terminals | 148 |



Provided by Industrial Automation Co. • www.industrialautomationco.com • Parts & Repair: 877-727-8757

# 2 ACOPOS servo drives

Controlling your power transmission system with B&R ACOPOS servo drives allows you to fully use the advantages of an optimized system architecture. Applications that require additional positioning tasks such as torque limitation or torque control can be created quickly and elegantly. The flexible system concept for B&R servo drives is made possible by coordinated hardware and software components. You can select the optimal system configuration for your application and increase your competitiveness.

- Perfect integration in all B&R product families
- Object-oriented axis programming minimizes development time and increases reusability
- Integrated technology functions for industry-specific tasks
- Operation of synchronous and induction motors possible
- Current controller scan time up to 50 µs
- Reduced commissioning and service times using "embedded motor parameter chip"
- CAN bus and POWERLINK network connection
- Input voltage range from 400 - 480 VAC (±10%) for many areas of use
- Connection possibilities for all standard encoder systems
- Up to two free slots for optional technology modules
- Electronic secure restart inhibit integrated
- Optionally available as version with partially-coated circuit boards – more robust with regard to environmental influences

## 2.1 Overview

The ACOPOS servo drive series covers a current range from 1.0 - 128 A and a power range from 0.5 - 64 kW with 11 devices in 4 groups. The devices in a group are designed using the same basic concept. They offer connection possibilities for all standard encoder systems and modular fieldbus interfaces.

| Group | 8V1010.xxx-2<br>8V1010.5xx-2<br>8V1016.xxx-2<br>8V1016.5xx-2 | 8V1022.0xx-2<br>8V1045.0xx-2<br>8V1090.0xx-2 | 8V1180.0xx-2<br>8V1320.0xx-2 | 8V1640.0xx-2<br>8V128M.0xx-2 |
|---|---|---|---|---|
| Power connections | Plug connection | Plug connection | Plug connection | Fixed |
| Integrated line filter | Yes | Yes | Yes | Yes |
| Power failure monitoring | Yes | Yes | Yes | Yes |
| DC bus connection | Yes | Yes | Yes | Yes |
| 24 VDC supply | External [1] | External [1] | External or internal via DC bus | External or internal via DC bus |
| 24 VDC output | No | No | 24 V / 0.5 A | 24 V / 0.5 A |
| Integrated brake chopper | Yes | Yes | Yes | Yes |
| Internal braking resistor | Yes | Yes | Yes | Yes [2] |
| Connection of external braking resistor possible | No | No | Yes | Yes |
| Monitored output for motor holding brake | Yes | Yes | Yes | Yes |
| Monitored input for motor temperature sensor | Yes | Yes | Yes | Yes |
| Max. number of plug-in modules | 3 | 4 | 4 | 4 |

Table 3: Overview of the ACOPOS servo drive series

1) An external DC bus power supply can be used.
2) The braking resistors integrated in 1640 and 128M ACOPOS servo drives are dimensioned so that it is possible to brake to a complete stop (in a typical drive situation).

ACOPOS servo drives are suitable for both synchronous and induction servo motors and have built-in line filters to meet the limit values from CISPR11, Group 2, Class A.

### Warning!

**ACOPOS drive systems are suitable for power mains that can provide a maximum short circuit current (SCCR) of 65 kA at a maximum of 482 V and that are protected with class J fuses.**

### 2.1.1 24 VDC supply during power failures

In order to be able to provide the stop function for Category 1 in accordance with IEC 60204-1 during a power failure, the 24 VDC supply voltage for the servo drives as well as encoders, sensors and the safety circuit must remain active during the entire stopping procedure.

ACOPOS servo drives detect a power failure and can immediately initiate active braking of the motor. The braking energy generated is returned to the DC bus and can be used for 24 VDC power supply via DC bus power supplies.

### Danger!

**In some applications, the DC bus is not ready for operation or there is not enough brake energy provided to guarantee that the 24 VDC supply voltage remains active until the system is stopped.**

**Internal DC bus power supplies are not ready for operation during the ACOPOS servo drive switch-on interval; external DC bus power supplies are not ready for operation while booting.**

For ACOPOS servo drives 8V1010 to 8V1090, an external DC bus power supply must be used. For ACOPOS servo drives 8V1180 to 8V128M, a DC bus power supply is integrated.

ACOPOS servo drives with an integrated DC bus power supply not only provide a 24 VDC power supply for the servo drive, but also a 24 VDC output for supplying encoders, sensors and the safety circuit. In many cases, this eliminates the need for the uninterruptible power supply (UPS) that would be otherwise necessary.

## 2.2 Status indicators

ACOPOS servo drives are equipped with three LEDs for direct diagnostics:




Figure 12: ACOPOS servo drive indicators

### LED status indicators

| Label | Color | Function | Description | |
|---|---|---|---|---|
| READY | Green | Ready | Solid green | The module is operational and the power stage can be enabled (operating system present and booted, no permanent or temporary errors). |
| | | | Blinking green [1)] | The module is not ready for operation.<br>Examples:<br>• No signal on one or both enable inputs<br>• DC bus voltage outside the tolerance range<br>• Overtemperature on the motor (temperature sensor)<br>• Motor feedback not connected or defective<br>• Motor temperature sensor not connected or defective<br>• Overtemperature on the module (IGBT junction, heat sink, etc.)<br>• Disturbance on network |
| RUN | Orange | Run | Solid orange | The module's power stage is enabled. |
| ERROR | Red | Error | Solid red [1)] | There is a permanent error on the module.<br>Examples:<br>• Permanent overcurrent<br>• Invalid data in EPROM |

Table 4: ACOPOS servo drive - LED status indicators

1) Firmware V2.130 and later.

If no LED is lit up, the ACOPOS servo drive is not supplied with 24 VDC mains voltage.

> **Danger!**
>
> **After switching off the device, wait for the DC bus to discharge for at least five minutes. To avoid a hazard, the current voltage on the DC bus must be measured with a suitable measuring instrument and less than 42 VDC before starting work. An unlit operating LED does not indicate that the device is de-energized!**

### 2.2.1 Status changes when starting up the operating system loader

The following intervals are used for the LED status indicators:

Width of box: 125 ms
Repeats after: 3000 ms

| Status | LED | Display |
|---|---|---|
| 1. Boot procedure for base hardware active | Green | |
| | Orange | |
| | Red | |
| 2. Network plug-in module configuration active | Green | |
| | Orange | |
| | Red | |
| 3. Waiting for network telegram | Green | |
| | Orange | |
| | Red | |
| 4. Network communication active | Green | |
| | Orange | |
| | Red | |

Table 5: Status changes when starting up the operating system loader

## Error status with reference to CAN plug-in module AC110

| Status | LED | Display |
|---|---|---|
| Invalid hardware ID [1] | Green | 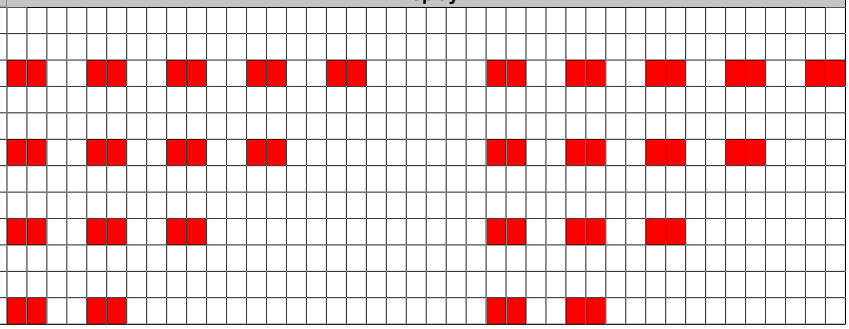 |
| | Orange | |
| | Red | |
| Boot error in CAN base hardware | Green | |
| | Orange | |
| | Red | |
| Bus off | Green | |
| | Orange | |
| | Red | |
| The CAN station number is 0. | Green | |
| | Orange | |
| | Red | |

Table 6: Error status with reference to CAN plug-in module AC110

1) Possible errors:
- The ACOPOS servo drive is defective.
- The plug-in module is defective
- The plug-in module is not connected properly in the slot.

## Error status with reference to POWERLINK V2 plug-in module AC114

| Status | LED | Display |
|---|---|---|
| Invalid hardware ID [1] | Green | 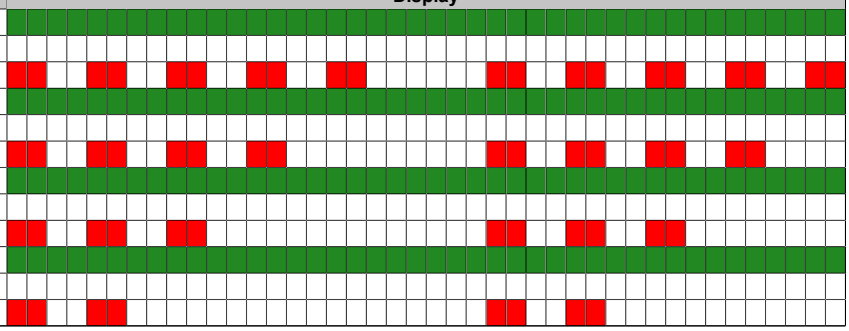 |
| | Orange | |
| | Red | |
| Boot error in POWERLINK base hardware | Green | |
| | Orange | |
| | Red | |
| Error booting the AC114-ARM | Green | |
| | Orange | |
| | Red | |
| The POWERLINK station number is 0. | Green | |
| | Orange | |
| | Red | |

Table 7: Error status with reference to POWERLINK V2 plug-in module AC114

1) Possible errors:
- The ACOPOS servo drive is defective (plug-in module not detected).
- The plug-in module is defective
- The plug-in module is not connected properly in the slot.
- The plug-in module works but is not automatically detected by the ACOPOS servo drive (old bootstrap loader).



Provided by Industrial Automation Co. • www.industrialautomationco.com • Parts & Repair: 877-727-8757

## 2.3 ACOPOS 1010, 1016

### 2.3.1 ACOPOS 8V1010.0xx-2

#### 2.3.1.1 Order data

| Model number | Short description | Figure |
|---|---|---|
| | **Servo drives** |  |
| 8V1010.00-2 | ACOPOS servo drive, 3x 400-480 V, 1.0 A, 0.45 kW, line filter, braking resistor and electronic secure restart inhibit integrated | |
| 8V1010.001-2 | ACOPOS servo drive, 3x 400-480 V, 1.0 A, 0.45 kW, coated, line filter, integrated braking resistor and electronic secure restart inhibit | |
| | **Optional accessories** | |
| | **Plug-in modules** | |
| 8AC110.60-2 | ACOPOS plug-in module, CAN interface | |
| 8AC110.60-3 | ACOPOS plug-in module, CAN interface | |
| 8AC114.60-2 | ACOPOS plug-in module, POWERLINK V2 interface | |
| 8AC120.60-1 | ACOPOS plug-in module, EnDat encoder and sine incremental encoder interface | |
| 8AC121.60-1 | ACOPOS plug-in module, HIPERFACE interface | |
| 8AC122.60-3 | ACOPOS plug-in module, resolver interface 10 kHz | |
| 8AC122.60-4 | ACOPOS plug-in module, resolver interface 10 kHz, no open line detection | |
| 8AC123.60-1 | ACOPOS plug-in module, incremental encoder and SSI absolute encoder interface | |
| 8AC125.60-1 | ACOPOS plug-in module, BiSS/SSI SinCos/SSI interface | |
| 8AC125.60-2 | ACOPOS plug-in module, BiSS encoder interface 5 V, baud rate 6.25 Mbit/s | |
| 8AC125.61-2 | ACOPOS plug-in module, BiSS encoder interface 12 V, baud rate 6.25 Mbit/s | |
| 8AC126.60-1 | ACOPOS plug-in module, EnDat 2.2 encoder interface | |
| 8AC130.60-1 | ACOPOS plug-in module, 8 digital I/O configurable in pairs as 24 V input or as output 400/100 mA, 2 digital outputs 2 A, order TB712 terminal block separately | |
| 8AC131.60-1 | ACOPOS plug-in module, 2 analog inputs ±10 V, 2 digital I/Os configurable as 24 V input or output 45 mA, order terminal block TB712 separately! | |
| 8AC132.60-1 | ACOPOS plug-in module, 2 analog inputs ±10 V | |
| 8AC140.60-3 | ACOPOS plug-in module, CPU, x86 100 MHz Intel compatible, 32 MB DRAM, 32 kB SRAM, removable application memory: CompactFlash, 1 CAN interface, 1 Ethernet interface 100 Base-T, 1 PROFIBUS DP slave interface, 1 RS232 interface, 3 digital I/O points configurable as 24 VDC input or 500 mA output, 1 analog input ±10 V, order program memory and 0TB708 terminal block separately | |
| 8AC140.61-3 | ACOPOS plug-in module, CPU, ARNC0, x86 100 MHz Intel compatible, 32 MB DRAM, 32 kB SRAM, removable application memory: CompactFlash, 1 CAN interface, 1 Ethernet interface 100 Base-T, 1 PROFIBUS DP slave interface, 1 RS232 interface, 3 digital I/O points configurable as 24 VDC input or 500 mA output, 1 analog input ±10 V, order program memory and 0TB708 terminal block separately | |
| 8AC141.60-2 | ACOPOS plug-in module, CPU, x86 100 MHz Intel compatible, 16 MB DRAM, 32 kB SRAM, removable application memory: CompactFlash, 2 CAN interfaces, 1 Ethernet interface 100 Base-T, 1 RS232 interface, 1 X2X Link Master interface, 3 digital I/O points configurable as 24 VDC input or 500 mA output, 1 analog input ±10 V, order program memory and 0TB704 and 0TB708 terminal blocks separately | |
| 8AC141.61-3 | ACOPOS plug-in module, CPU, ARNC0, x86 100 MHz Intel compatible, 32 MB DRAM, 32 kB SRAM, removable application memory: CompactFlash, 2 CAN interfaces, 1 Ethernet interface 100 Base-T, 1 RS232 interface, 1 X2X Link Master interface, 3 digital I/O points configurable as 24 VDC input or 500 mA output, 1 analog input ±10 V, order program memory and 0TB704 and 0TB708 terminal blocks separately | |
| | **Shielding component sets** | |
| 8X0040.00-1 | ACOPOS shielding components set for 8V1010.xxx-x and 8V1016.xxx-x | |
| | **Terminal sets** | |
| 8X0001.00-1 | ACOPOS accessories, plug set for 8V1010.00 and 8V1090.00 (3 phase) | |

Table 8: 8V1010.00-2, 8V1010.001-2 - Order data

### 2.3.1.2 Technical data

| Model number | 8V1010.00-2 | 8V1010.001-2 |
|---|---|---|
| **General information** | | |
| Note | - | Variant with partially coated circuit boards |
| B&R ID code | 0x18D6 | 0xA6D4 |
| Slots for plug-in modules | 3 | |
| Certification | | |
| CE | Yes | |
| cULus | Yes | |
| KC | Yes | |
| FSC | Yes | |
| **Power mains connection** | | |
| Permissible power mains forms | TT, TN [1] | TT, TN [2] |
| Mains input voltage | 3x 400 VAC to 480 VAC ±10% | |
| Frequency | 50 / 60 Hz ±4% | |
| Installed load | Max. 1.35 kVA | |
| Starting current | 2 A (at 400 VAC) | |
| Switch-on interval | >10 s | |
| Integrated line filter in accordance with EN 61800-3, Category C3 [3] | Yes | |
| Power loss at max. device power without braking resistor | 80 W | |
| **DC bus connection** | | |
| DC bus capacitance | 165 µF | |
| **24 VDC supply** | | |
| Input voltage [4] | 24 VDC +25% / -20% | |
| Input capacitance | 5600 µF | |
| Power consumption [5] | Max. 1.47 A + current for motor holding brake | |
| **Motor connection** | | |
| Quantity | 1 | |
| Continuous current [6] | 1 $A_{eff}$ | |
| Reduction of continuous current depending on the ambient temperature | | |
| Mains input voltage: 400 VAC | | |
| Switching frequency 5 kHz | No reduction | |
| Switching frequency 10 kHz | No reduction [7] | |
| Switching frequency 20 kHz | No reduction | |
| Mains input voltage: 480 VAC | | |
| Switching frequency 5 kHz | No reduction | |
| Switching frequency 10 kHz | No reduction [7] | |
| Switching frequency 20 kHz | 0.13 $A_{eff}$ per °C (starting at 45°C) | |
| Reduction of continuous current depending on the installation elevation | | |
| Starting at 500 m above sea level | 0.1 $A_{eff}$ per 1000 m | |
| Peak current | 2.8 $A_{eff}$ | |
| Nominal switching frequency | 10 kHz | |
| Possible switching frequencies | 5 / 10 / 20 kHz | |
| Electrical stress of the connected motor in accordance with IEC TS 60034-25 [8] | Limit value curve A | |
| Max. motor line length | 15 m | |
| Protective measures | | |
| Overload protection | Yes | |
| Short circuit and ground fault protection | Yes | |
| Max. output frequency | 598 Hz [9] | 598 Hz [10] |
| **Motor holding brake connection** | | |
| Response threshold for open line monitoring | Approx. 245 mA | |
| Max. output current | 1.3 A | |
| Max. number of switching cycles | Unlimited since done electronically | Unlimited since handled electronically |
| **Braking resistors** | | |
| Peak power output | 2 kW | |
| Continuous power | 130 W | |
| **Limit switch and reference inputs** | | |
| Quantity | 3 | |
| Wiring | Sink | |
| Electrical isolation | | |
| Input - ACOPOS | Yes | |
| Input - Input | No | |
| Input voltage | | |
| Nominal | 24 VDC | |
| Maximum | 30 VDC | |
| Switching threshold | | |
| Low | <5 V | |
| High | >15 V | |

Table 9: 8V1010.00-2, 8V1010.001-2 - Technical data



Provided by Industrial Automation Co. • www.industrialautomationco.com • Parts & Repair: 877-727-8757

| Model number | 8V1010.00-2 | 8V1010.001-2 |
|---|---|---|
| Input current at nominal voltage | Approx. 4 mA | |
| Switching delay | Max. 2.0 ms | |
| Modulation compared to ground potential | Max. ±38 V | |
| **Enable inputs** | | |
| Quantity | 1 | |
| Wiring | Sink | |
| Electrical isolation | | |
| Input - ACOPOS | Yes | |
| Input voltage | | |
| Nominal | 24 VDC | |
| Maximum | 30 VDC | |
| Input current at nominal voltage | Approx. 30 mA | |
| Switching threshold | | |
| Low | <5 V | |
| High | >15 V | |
| Switching delay | | |
| Enable 0 -> 1, ready for PWM | Max. 100 µs | |
| Enable 1 -> 0, PWM off | Max. 2.0 ms | |
| Modulation compared to ground potential | Max. ±38 V | |
| OSSD signal connections [11)] | Not permitted | |
| **Trigger inputs** | | |
| Quantity | 2 | |
| Wiring | Sink | |
| Electrical isolation | | |
| Input - ACOPOS | Yes | |
| Input - Input | No | |
| Input voltage | | |
| Nominal | 24 VDC | |
| Maximum | 30 VDC | |
| Switching threshold | | |
| Low | <5 V | |
| High | >15 V | |
| Input current at nominal voltage | Approx. 10 mA | |
| Switching delay | | |
| Positive edge | 52 µs ±0.5 µs (digitally filtered) | |
| Negative edge | 53 µs ±0.5 µs (digitally filtered) | |
| Modulation compared to ground potential | Max. ±38 V | |
| **Electrical characteristics** | | |
| Discharge capacitance | 550 nF | |
| **Operating conditions** | | |
| Permitted mounting orientations | | |
| Hanging vertically | Yes | |
| Lying horizontally | Yes | |
| Standing horizontally | No | |
| Installation at elevations above sea level | | |
| Nominal | 0 to 500 m | |
| Maximum [12)] | 2000 m | |
| Degree of pollution in accordance with EN 60664-1 | 2 (non-conductive pollution) | |
| Overvoltage category in accordance with IEC 60364-4-443:1999 | II | |
| EN 60529 protection | IP20 | |
| **Environmental conditions** | | |
| Temperature | | |
| Operation | | |
| Nominal | 5 to 40°C | |
| Maximum [13)] | 55°C | |
| Storage | -25 to 55°C | |
| Transport | -25 to 70°C | |
| Relative humidity | | |
| Operation | 5 to 85% | |
| Storage | 5 to 95% | |
| Transport | Max. 95% at 40°C | |
| **Mechanical characteristics** | | |
| Dimensions | | |
| Width | 58.5 mm | |
| Height | 257 mm | |
| Depth | 220 mm | |
| Weight | 2.5 kg | |

Table 9: 8V1010.00-2, 8V1010.001-2 - Technical data

1) In the USA, the terms "Delta / Wye with Grounded Wye neutral" are common for TT and TN power mains.
2) In the USA, TT and TN power mains are commonly referred to as "Delta/Wye with grounded Wye neutral".
3) Limit values from EN 61800-3 C3 (second environment).
4) When using motor holding brakes, the valid input voltage range is reduced. The input voltage range should be selected so that the proper supply voltage for the motor holding brake can be maintained.



Provided by Industrial Automation Co. • www.industrialautomationco.com • Parts & Repair: 877-727-8757

5) The current requirements depend on the configuration of the ACOPOS servo drive.
6) Valid in the following conditions: Mains input voltage 400 VAC, nominal switching frequency, 40°C ambient temperature, installation altitudes <500 m above sea level.
7) Value for the nominal switching frequency.
8) If necessary, the stress of the motor isolation system be reduced by an additional externally-wired dU/dt choke. For example, the RWK 305 three-phase dU/dt choke from Schaffner (www.schaffner.com) can be used. IMPORTANT: Even when using a dU/dt choke, it is necessary to ensure that an EMC-compatible, low inductance shield connection is used!
9) The module's electrical output frequency (SCTRL_SPEED_ACT * MOTOR_POLEPAIRS) is monitored to protect against dual-use in accordance with EC 428/2009 | 3A225. If the electrical output frequency of the module exceeds the limit value of 598 Hz uninterrupted for more than 0.5 s, then the current motion is aborted and error 6060 is output (Power element: Limit speed exceeded).
10) The module's electrical output frequency (SCTRL_SPEED_ACT * MOTOR_POLEPAIRS) is monitored to protect against dual use in accordance with EC 428/2009 | 3A225. If the electrical output frequency of the module exceeds the limit value of 598 Hz uninterrupted for more than 0.5 s, then the current movement is aborted and error 6060 is output (power unit: limit speed exceeded).
11) OSSD (Open Signal Switching Device) signals are used to monitor signal lines for short circuits and cross faults.
12) Continuous operation of ACOPOS servo drives at altitudes ranging from 500 m to 2000 m above sea level is possible (taking the continuous current reductions listed into consideration). Requirements that go above and beyond this need to be arranged with B&R.
13) Continuous operation of ACOPOS servo drives at ambient temperatures ranging from 40°C to max. 55°C is possible (taking the specified continuous current reductions into consideration), but this will result in a shorter service life.



Provided by Industrial Automation Co. • www.industrialautomationco.com • Parts & Repair: 877-727-8757

## 2.3.2 ACOPOS 8V1010.5xx-2

### 2.3.2.1 Order data

| Model number | Short description | Figure |
|---|---|---|
| | **Servo drives** |  |
| 8V1010.50-2 | ACOPOS servo drive, 3x 110-230 V / 1x 110-230 V, 2.0 A, 0.45 kW, line filter, braking resistor and electronic secure restart inhibit integrated | |
| 8V1010.501-2 | ACOPOS servo drive, 3x 110-230 V / 1x 110-230 V, 2.3 A, 0.45 kW, coated, line filter, integrated braking resistor and electronic secure restart inhibit | |
| | **Optional accessories** | |
| | **Plug-in modules** | |
| 8AC110.60-2 | ACOPOS plug-in module, CAN interface | |
| 8AC110.60-3 | ACOPOS plug-in module, CAN interface | |
| 8AC114.60-2 | ACOPOS plug-in module, POWERLINK V2 interface | |
| 8AC120.60-1 | ACOPOS plug-in module, EnDat encoder and sine incremental encoder interface | |
| 8AC121.60-1 | ACOPOS plug-in module, HIPERFACE interface | |
| 8AC122.60-3 | ACOPOS plug-in module, resolver interface 10 kHz | |
| 8AC122.60-4 | ACOPOS plug-in module, resolver interface 10 kHz, no open line detection | |
| 8AC123.60-1 | ACOPOS plug-in module, incremental encoder and SSI absolute encoder interface | |
| 8AC125.60-1 | ACOPOS plug-in module, BiSS/SSI SinCos/SSI interface | |
| 8AC125.60-2 | ACOPOS plug-in module, BiSS encoder interface 5 V, baud rate 6.25 Mbit/s | |
| 8AC125.61-2 | ACOPOS plug-in module, BiSS encoder interface 12 V, baud rate 6.25 Mbit/s | |
| 8AC126.60-1 | ACOPOS plug-in module, EnDat 2.2 encoder interface | |
| 8AC130.60-1 | ACOPOS plug-in module, 8 digital I/O configurable in pairs as 24 V input or as output 400/100 mA, 2 digital outputs 2 A, order TB712 terminal block separately | |
| 8AC131.60-1 | ACOPOS plug-in module, 2 analog inputs ±10 V, 2 digital I/Os configurable as 24 V input or output 45 mA, order terminal block TB712 separately! | |
| 8AC132.60-1 | ACOPOS plug-in module, 2 analog inputs ±10 V | |
| 8AC140.60-3 | ACOPOS plug-in module, CPU, x86 100 MHz Intel compatible, 32 MB DRAM, 32 kB SRAM, removable application memory: CompactFlash, 1 CAN interface, 1 Ethernet interface 100 Base-T, 1 PROFIBUS DP slave interface, 1 RS232 interface, 3 digital I/O points configurable as 24 VDC input or 500 mA output, 1 analog input ±10 V, order program memory and 0TB708 terminal block separately | |
| 8AC140.61-3 | ACOPOS plug-in module, CPU, ARNC0, x86 100 MHz Intel compatible, 32 MB DRAM, 32 kB SRAM, removable application memory: CompactFlash, 1 CAN interface, 1 Ethernet interface 100 Base-T, 1 PROFIBUS DP slave interface, 1 RS232 interface, 3 digital I/O points configurable as 24 VDC input or 500 mA output, 1 analog input ±10 V, order program memory and 0TB708 terminal block separately | |
| 8AC141.60-2 | ACOPOS plug-in module, CPU, x86 100 MHz Intel compatible, 16 MB DRAM, 32 kB SRAM, removable application memory: CompactFlash, 2 CAN interfaces, 1 Ethernet interface 100 Base-T, 1 RS232 interface, 1 X2X Link Master interface, 3 digital I/O points configurable as 24 VDC input or 500 mA output, 1 analog input ±10 V, order program memory and 0TB704 and 0TB708 terminal blocks separately | |
| 8AC141.61-3 | ACOPOS plug-in module, CPU, ARNC0, x86 100 MHz Intel compatible, 32 MB DRAM, 32 kB SRAM, removable application memory: CompactFlash, 2 CAN interfaces, 1 Ethernet interface 100 Base-T, 1 RS232 interface, 1 X2X Link Master interface, 3 digital I/O points configurable as 24 VDC input or 500 mA output, 1 analog input ±10 V, order program memory and 0TB704 and 0TB708 terminal blocks separately | |
| | **Shielding component sets** | |
| 8X0040.00-1 | ACOPOS shielding components set for 8V1010.xxx-x and 8V1016.xxx-x | |
| | **Terminal sets** | |
| 8X0006.00-1 | ACOPOS accessories, plug set for 8V1010.50 and 8V1016.50 (1 phase) | |

Table 10: 8V1010.50-2, 8V1010.501-2 - Order data

### 2.3.2.2 Technical data

| Model number | 8V1010.50-2 | 8V1010.501-2 |
|---|---|---|
| **General information** | | |
| Note | - | Variant with partially coated circuit boards |
| B&R ID code | 0x18D4 | 0xA6D5 |
| Slots for plug-in modules | 3 | |
| Certification | | |
| CE | Yes | |
| cULus | Yes | |
| KC | Yes | |
| FSC | Yes | |
| **Power mains connection** | | |
| Permissible power mains forms | TT, TN [1] | TT, TN [2] |
| Mains input voltage | 3x 110 VAC to 230 VAC ±10% or 1x 110 VAC to 230 VAC ±10% | |
| Frequency | 50 / 60 Hz ±4% | |
| Installed load | Max. 1.35 kVA | |
| Starting current | 5 A (at 230 VAC) | |
| Switch-on interval | >10 s | |
| Integrated line filter in accordance with EN 61800-3, Category C3 [3] | Yes | |
| Power loss at max. device power without braking resistor | 80 W | |
| **DC bus connection** | | |
| DC bus capacitance | 2040 µF | |
| **24 VDC supply** | | |
| Input voltage [4] | 24 VDC +25% / -20% | |
| Input capacitance | 5600 µF | |
| Power consumption [5] | Max. 1.47 A + current for motor holding brake | |
| **Motor connection** | | |
| Quantity | 1 | |
| Continuous current [6] | 2.3 $A_{eff}$ | |
| Reduction of continuous current depending on the ambient temperature | | |
| Mains input voltage: 110 VAC | | |
| Switching frequency 5 kHz | No reduction | |
| Switching frequency 10 kHz | No reduction | No reduction [7] |
| Switching frequency 20 kHz | No reduction | |
| Mains input voltage: 230 VAC | | |
| Switching frequency 5 kHz | No reduction | |
| Switching frequency 10 kHz | No reduction | No reduction [7] |
| Switching frequency 20 kHz | No reduction | |
| Reduction of continuous current depending on the installation elevation | | |
| Starting at 500 m above sea level | 0.23 $A_{eff}$ per 1000 m | |
| Peak current | 7.8 $A_{eff}$ | |
| Nominal switching frequency | 10 kHz | |
| Possible switching frequencies | 5 / 10 / 20 kHz | |
| Electrical stress of the connected motor in accordance with IEC TS 60034-25 [8] | Limit value curve A | |
| Max. motor line length | 15 m | |
| Protective measures | | |
| Overload protection | Yes | |
| Short circuit and ground fault protection | Yes | |
| Max. output frequency | 598 Hz [9] | 598 Hz [10] |
| **Motor holding brake connection** | | |
| Response threshold for open line monitoring | Approx. 245 mA | |
| Max. output current | 1.3 A | |
| Max. number of switching cycles | Unlimited since done electronically | Unlimited since handled electronically |
| **Braking resistors** | | |
| Peak power output | 1.9 kW | |
| Continuous power | 130 W | |
| **Limit switch and reference inputs** | | |
| Quantity | 3 | |
| Wiring | Sink | |
| Electrical isolation | | |
| Input - ACOPOS | Yes | |
| Input - Input | No | |
| Input voltage | | |
| Nominal | 24 VDC | |
| Maximum | 30 VDC | |
| Switching threshold | | |
| Low | <5 V | |
| High | >15 V | |

Table 11: 8V1010.50-2, 8V1010.501-2 - Technical data



Provided by Industrial Automation Co. • www.industrialautomationco.com • Parts & Repair: 877-727-8757

| Model number | 8V1010.50-2 | 8V1010.501-2 |
|---|---|---|
| Input current at nominal voltage | Approx. 4 mA | |
| Switching delay | Max. 2.0 ms | |
| Modulation compared to ground potential | Max. ±38 V | |
| **Enable inputs** | | |
| Quantity | 1 | |
| Wiring | Sink | |
| Electrical isolation | | |
| Input - ACOPOS | Yes | |
| Input voltage | | |
| Nominal | 24 VDC | |
| Maximum | 30 VDC | |
| Input current at nominal voltage | Approx. 30 mA | |
| Switching threshold | | |
| Low | <5 V | |
| High | >15 V | |
| Switching delay | | |
| Enable 0 -> 1, ready for PWM | Max. 100 µs | |
| Enable 1 -> 0, PWM off | Max. 2.0 ms | |
| Modulation compared to ground potential | Max. ±38 V | |
| OSSD signal connections [11)] | Not permitted | |
| **Trigger inputs** | | |
| Quantity | 2 | |
| Wiring | Sink | |
| Electrical isolation | | |
| Input - ACOPOS | Yes | |
| Input - Input | No | |
| Input voltage | | |
| Nominal | 24 VDC | |
| Maximum | 30 VDC | |
| Switching threshold | | |
| Low | <5 V | |
| High | >15 V | |
| Input current at nominal voltage | Approx. 10 mA | |
| Switching delay | | |
| Positive edge | 52 µs ±0.5 µs (digitally filtered) | |
| Negative edge | 53 µs ±0.5 µs (digitally filtered) | |
| Modulation compared to ground potential | Max. ±38 V | |
| **Electrical characteristics** | | |
| Discharge capacitance | 330 nF | |
| **Operating conditions** | | |
| Permitted mounting orientations | | |
| Hanging vertically | Yes | |
| Lying horizontally | Yes | |
| Standing horizontally | No | |
| Installation at elevations above sea level | | |
| Nominal | 0 to 500 m | |
| Maximum [12)] | 2000 m | |
| Degree of pollution in accordance with EN 60664-1 | 2 (non-conductive pollution) | |
| Overvoltage category in accordance with IEC 60364-4-443:1999 | II | |
| EN 60529 protection | IP20 | |
| **Environmental conditions** | | |
| Temperature | | |
| Operation | | |
| Nominal | 5 to 40°C | |
| Maximum [13)] | 55°C | |
| Storage | -25 to 55°C | |
| Transport | -25 to 70°C | |
| Relative humidity | | |
| Operation | 5 to 85% | |
| Storage | 5 to 95% | |
| Transport | Max. 95% at 40°C | |
| **Mechanical characteristics** | | |
| Dimensions | | |
| Width | 58.5 mm | |
| Height | 257 mm | |
| Depth | 220 mm | |
| Weight | 2.5 kg | |

Table 11: 8V1010.50-2, 8V1010.501-2 - Technical data

1) In the USA, the terms "Delta / Wye with Grounded Wye neutral" are common for TT and TN power mains.
2) In the USA, TT and TN power mains are commonly referred to as "Delta/Wye with grounded Wye neutral".
3) Limit values from EN 61800-3 C3 (second environment).
4) When using motor holding brakes, the valid input voltage range is reduced. The input voltage range should be selected so that the proper supply voltage for the motor holding brake can be maintained.



Provided by Industrial Automation Co. • www.industrialautomationco.com • Parts & Repair: 877-727-8757

5) The current requirements depend on the configuration of the ACOPOS servo drive.
6) Valid in the following conditions: Mains input voltage 230 VAC, nominal switching frequency, 40 °C ambient temperature, installation altitudes <500 m above sea level.
7) Value for the nominal switching frequency.
8) If necessary, the stress of the motor isolation system be reduced by an additional externally-wired dU/dt choke. For example, the RWK 305 three-phase dU/dt choke from Schaffner (www.schaffner.com) can be used. IMPORTANT: Even when using a dU/dt choke, it is necessary to ensure that an EMC-compatible, low inductance shield connection is used!
9) The module's electrical output frequency (SCTRL_SPEED_ACT * MOTOR_POLEPAIRS) is monitored to protect against dual-use in accordance with EC 428/2009 | 3A225. If the electrical output frequency of the module exceeds the limit value of 598 Hz uninterrupted for more than 0.5 s, then the current motion is aborted and error 6060 is output (Power element: Limit speed exceeded).
10) The module's electrical output frequency (SCTRL_SPEED_ACT * MOTOR_POLEPAIRS) is monitored to protect against dual use in accordance with EC 428/2009 | 3A225. If the electrical output frequency of the module exceeds the limit value of 598 Hz uninterrupted for more than 0.5 s, then the current movement is aborted and error 6060 is output (power unit: limit speed exceeded).
11) OSSD (Open Signal Switching Device) signals are used to monitor signal lines for short circuits and cross faults.
12) Continuous operation of ACOPOS servo drives at altitudes ranging from 500 m to 2000 m above sea level is possible (taking the continuous current reductions listed into consideration). Requirements that go above and beyond this need to be arranged with B&R.
13) Continuous operation of ACOPOS servo drives at ambient temperatures ranging from 40°C to max. 55°C is possible (taking the specified continuous current reductions into consideration), but this will result in a shorter service life.



Provided by Industrial Automation Co. • www.industrialautomationco.com • Parts & Repair: 877-727-8757

## 2.3.3 ACOPOS 8V1016.0xx-2

### 2.3.3.1 Order data

| Model number | Short description | Figure |
|---|---|---|
| | **Servo drives** |  |
| 8V1016.00-2 | ACOPOS servo drive, 3x 400-480 V, 1.6 A, 0.7 kW, line filter, braking resistor and electronic secure restart inhibit integrated | |
| 8V1016.001-2 | ACOPOS servo drive, 3x 400-480 V, 1.6 A, 0.7 kW, coated, line filter, integrated braking resistor and electronic secure restart inhibit | |
| | **Optional accessories** | |
| | **Plug-in modules** | |
| 8AC110.60-2 | ACOPOS plug-in module, CAN interface | |
| 8AC110.60-3 | ACOPOS plug-in module, CAN interface | |
| 8AC114.60-2 | ACOPOS plug-in module, POWERLINK V2 interface | |
| 8AC120.60-1 | ACOPOS plug-in module, EnDat encoder and sine incremental encoder interface | |
| 8AC121.60-1 | ACOPOS plug-in module, HIPERFACE interface | |
| 8AC122.60-3 | ACOPOS plug-in module, resolver interface 10 kHz | |
| 8AC122.60-4 | ACOPOS plug-in module, resolver interface 10 kHz, no open line detection | |
| 8AC123.60-1 | ACOPOS plug-in module, incremental encoder and SSI absolute encoder interface | |
| 8AC125.60-1 | ACOPOS plug-in module, BiSS/SSI SinCos/SSI interface | |
| 8AC125.60-2 | ACOPOS plug-in module, BiSS encoder interface 5 V, baud rate 6.25 Mbit/s | |
| 8AC125.61-2 | ACOPOS plug-in module, BiSS encoder interface 12 V, baud rate 6.25 Mbit/s | |
| 8AC126.60-1 | ACOPOS plug-in module, EnDat 2.2 encoder interface | |
| 8AC130.60-1 | ACOPOS plug-in module, 8 digital I/O configurable in pairs as 24 V input or as output 400/100 mA, 2 digital outputs 2 A, order TB712 terminal block separately | |
| 8AC131.60-1 | ACOPOS plug-in module, 2 analog inputs ±10 V, 2 digital I/Os configurable as 24 V input or output 45 mA, order terminal block TB712 separately! | |
| 8AC132.60-1 | ACOPOS plug-in module, 2 analog inputs ±10 V | |
| 8AC140.60-3 | ACOPOS plug-in module, CPU, x86 100 MHz Intel compatible, 32 MB DRAM, 32 kB SRAM, removable application memory: CompactFlash, 1 CAN interface, 1 Ethernet interface 100 Base-T, 1 PROFIBUS DP slave interface, 1 RS232 interface, 3 digital I/O points configurable as 24 VDC input or 500 mA output, 1 analog input ±10 V, order program memory and 0TB708 terminal block separately | |
| 8AC140.61-3 | ACOPOS plug-in module, CPU, ARNC0, x86 100 MHz Intel compatible, 32 MB DRAM, 32 kB SRAM, removable application memory: CompactFlash, 1 CAN interface, 1 Ethernet interface 100 Base-T, 1 PROFIBUS DP slave interface, 1 RS232 interface, 3 digital I/O points configurable as 24 VDC input or 500 mA output, 1 analog input ±10 V, order program memory and 0TB708 terminal block separately | |
| 8AC141.60-2 | ACOPOS plug-in module, CPU, x86 100 MHz Intel compatible, 16 MB DRAM, 32 kB SRAM, removable application memory: CompactFlash, 2 CAN interfaces, 1 Ethernet interface 100 Base-T, 1 RS232 interface, 1 X2X Link Master interface, 3 digital I/O points configurable as 24 VDC input or 500 mA output, 1 analog input ±10 V, order program memory and 0TB704 and 0TB708 terminal blocks separately | |
| 8AC141.61-3 | ACOPOS plug-in module, CPU, ARNC0, x86 100 MHz Intel compatible, 32 MB DRAM, 32 kB SRAM, removable application memory: CompactFlash, 2 CAN interfaces, 1 Ethernet interface 100 Base-T, 1 RS232 interface, 1 X2X Link Master interface, 3 digital I/O points configurable as 24 VDC input or 500 mA output, 1 analog input ±10 V, order program memory and 0TB704 and 0TB708 terminal blocks separately | |
| | **Shielding component sets** | |
| 8X0040.00-1 | ACOPOS shielding components set for 8V1010.xxx-x and 8V1016.xxx-x | |
| | **Terminal sets** | |
| 8X0001.00-1 | ACOPOS accessories, plug set for 8V1010.00 and 8V1090.00 (3 phase) | |

Table 12: 8V1016.00-2, 8V1016.001-2 - Order data

### 2.3.3.2 Technical data

| Model number | 8V1016.00-2 | 8V1016.001-2 |
|---|---|---|
| **General information** | | |
| Note | - | Variant with partially coated circuit boards |
| B&R ID code | 0x18D5 | 0xA6D6 |
| Slots for plug-in modules | 3 | |
| Certification | | |
| CE | Yes | |
| cULus | Yes | |
| KC | Yes | |
| FSC | Yes | |
| **Power mains connection** | | |
| Permissible power mains forms | TT, TN [1] | TT, TN [2] |
| Mains input voltage | 3x 400 VAC to 480 VAC ±10% | |
| Frequency | 50 / 60 Hz ±4% | |
| Installed load | Max. 2.1 kVA | |
| Starting current | 2 A (at 400 VAC) | |
| Switch-on interval | >10 s | |
| Integrated line filter in accordance with EN 61800-3, Category C3 [3] | Yes | |
| Power loss at max. device power without braking resistor | 110 W | |
| **DC bus connection** | | |
| DC bus capacitance | 165 µF | |
| **24 VDC supply** | | |
| Input voltage [4] | 24 VDC +25% / -20% | |
| Input capacitance | 5600 µF | |
| Power consumption [5] | Max. 1.47 A + current for motor holding brake | |
| **Motor connection** | | |
| Quantity | 1 | |
| Continuous current [6] | 1.6 $A_{eff}$ | |
| Reduction of continuous current depending on the ambient temperature | | |
| Mains input voltage: 400 VAC | | |
| Switching frequency 5 kHz | No reduction | |
| Switching frequency 10 kHz | No reduction [7] | |
| Switching frequency 20 kHz | No reduction | |
| Mains input voltage: 480 VAC | | |
| Switching frequency 5 kHz | No reduction | |
| Switching frequency 10 kHz | No reduction [7] | |
| Switching frequency 20 kHz | 0.13 $A_{eff}$ per °C (starting at 40°C) | |
| Reduction of continuous current depending on the installation elevation | | |
| Starting at 500 m above sea level | 0.16 $A_{eff}$ per 1000 m | |
| Peak current | 5 $A_{eff}$ | |
| Nominal switching frequency | 10 kHz | |
| Possible switching frequencies | 5 / 10 / 20 kHz | |
| Electrical stress of the connected motor in accordance with IEC TS 60034-25 [8] | Limit value curve A | |
| Max. motor line length | 15 m | |
| Protective measures | | |
| Overload protection | Yes | |
| Short circuit and ground fault protection | Yes | |
| Max. output frequency | 598 Hz [9] | 598 Hz [10] |
| **Motor holding brake connection** | | |
| Response threshold for open line monitoring | Approx. 245 mA | |
| Max. output current | 1.3 A | |
| Max. number of switching cycles | Unlimited since done electronically | Unlimited since handled electronically |
| **Braking resistors** | | |
| Peak power output | 2 kW | |
| Continuous power | 130 W | |
| **Limit switch and reference inputs** | | |
| Quantity | 3 | |
| Wiring | Sink | |
| Electrical isolation | | |
| Input - ACOPOS | Yes | |
| Input - Input | No | |
| Input voltage | | |
| Nominal | 24 VDC | |
| Maximum | 30 VDC | |
| Switching threshold | | |
| Low | <5 V | |
| High | >15 V | |

Table 13: 8V1016.00-2, 8V1016.001-2 - Technical data



Provided by Industrial Automation Co. • www.industrialautomationco.com • Parts & Repair: 877-727-8757

| Model number | 8V1016.00-2 | 8V1016.001-2 |
|---|---|---|
| Input current at nominal voltage | Approx. 4 mA | |
| Switching delay | Max. 2.0 ms | |
| Modulation compared to ground potential | Max. ±38 V | |
| **Enable inputs** | | |
| Quantity | 1 | |
| Wiring | Sink | |
| Electrical isolation | | |
| Input - ACOPOS | Yes | |
| Input voltage | | |
| Nominal | 24 VDC | |
| Maximum | 30 VDC | |
| Input current at nominal voltage | Approx. 30 mA | |
| Switching threshold | | |
| Low | <5 V | |
| High | >15 V | |
| Switching delay | | |
| Enable 0 -> 1, ready for PWM | Max. 100 µs | |
| Enable 1 -> 0, PWM off | Max. 2.0 ms | |
| Modulation compared to ground potential | Max. ±38 V | |
| OSSD signal connections [11)] | Not permitted | |
| **Trigger inputs** | | |
| Quantity | 2 | |
| Wiring | Sink | |
| Electrical isolation | | |
| Input - ACOPOS | Yes | |
| Input - Input | No | |
| Input voltage | | |
| Nominal | 24 VDC | |
| Maximum | 30 VDC | |
| Switching threshold | | |
| Low | <5 V | |
| High | >15 V | |
| Input current at nominal voltage | Approx. 10 mA | |
| Switching delay | | |
| Positive edge | 52 µs ±0.5 µs (digitally filtered) | |
| Negative edge | 53 µs ±0.5 µs (digitally filtered) | |
| Modulation compared to ground potential | Max. ±38 V | |
| **Electrical characteristics** | | |
| Discharge capacitance | 550 nF | |
| **Operating conditions** | | |
| Permitted mounting orientations | | |
| Hanging vertically | Yes | |
| Lying horizontally | Yes | |
| Standing horizontally | No | |
| Installation at elevations above sea level | | |
| Nominal | 0 to 500 m | |
| Maximum [12)] | 2000 m | |
| Degree of pollution in accordance with EN 60664-1 | 2 (non-conductive pollution) | |
| Overvoltage category in accordance with IEC 60364-4-443:1999 | II | |
| EN 60529 protection | IP20 | |
| **Environmental conditions** | | |
| Temperature | | |
| Operation | | |
| Nominal | 5 to 40°C | |
| Maximum [13)] | 55°C | |
| Storage | -25 to 55°C | |
| Transport | -25 to 70°C | |
| Relative humidity | | |
| Operation | 5 to 85% | |
| Storage | 5 to 95% | |
| Transport | Max. 95% at 40°C | |
| **Mechanical characteristics** | | |
| Dimensions | | |
| Width | 58.5 mm | |
| Height | 257 mm | |
| Depth | 220 mm | |
| Weight | 2.5 kg | |

Table 13: 8V1016.00-2, 8V1016.001-2 - Technical data

1) In the USA, the terms "Delta / Wye with Grounded Wye neutral" are common for TT and TN power mains.
2) In the USA, TT and TN power mains are commonly referred to as "Delta/Wye with grounded Wye neutral".
3) Limit values from EN 61800-3 C3 (second environment).
4) When using motor holding brakes, the valid input voltage range is reduced. The input voltage range should be selected so that the proper supply voltage for the motor holding brake can be maintained.



Provided by Industrial Automation Co. • www.industrialautomationco.com • Parts & Repair: 877-727-8757

5) The current requirements depend on the configuration of the ACOPOS servo drive.
6) Valid in the following conditions: Mains input voltage 400 VAC, nominal switching frequency, 40°C ambient temperature, installation altitudes <500 m above sea level.
7) Value for the nominal switching frequency.
8) If necessary, the stress of the motor isolation system be reduced by an additional externally-wired dU/dt choke. For example, the RWK 305 three-phase dU/dt choke from Schaffner (www.schaffner.com) can be used. IMPORTANT: Even when using a dU/dt choke, it is necessary to ensure that an EMC-compatible, low inductance shield connection is used!
9) The module's electrical output frequency (SCTRL_SPEED_ACT * MOTOR_POLEPAIRS) is monitored to protect against dual-use in accordance with EC 428/2009 | 3A225. If the electrical output frequency of the module exceeds the limit value of 598 Hz uninterrupted for more than 0.5 s, then the current motion is aborted and error 6060 is output (Power element: Limit speed exceeded).
10) The module's electrical output frequency (SCTRL_SPEED_ACT * MOTOR_POLEPAIRS) is monitored to protect against dual use in accordance with EC 428/2009 | 3A225. If the electrical output frequency of the module exceeds the limit value of 598 Hz uninterrupted for more than 0.5 s, then the current movement is aborted and error 6060 is output (power unit: limit speed exceeded).
11) OSSD (Open Signal Switching Device) signals are used to monitor signal lines for short circuits and cross faults.
12) Continuous operation of ACOPOS servo drives at altitudes ranging from 500 m to 2000 m above sea level is possible (taking the continuous current reductions listed into consideration). Requirements that go above and beyond this need to be arranged with B&R.
13) Continuous operation of ACOPOS servo drives at ambient temperatures ranging from 40°C to max. 55°C is possible (taking the specified continuous current reductions into consideration), but this will result in a shorter service life.



Provided by Industrial Automation Co. • www.industrialautomationco.com • Parts & Repair: 877-727-8757

## 2.3.4 ACOPOS 8V1016.5xx-2

### 2.3.4.1 Order data

| Model number | Short description | Figure |
|---|---|---|
| | **Servo drives** |  |
| 8V1016.50-2 | ACOPOS servo drive, 3x 110-230 V / 1x 110-230 V, 3.6 A, 0.7 kW, line filter, integrated braking resistor and electronic secure restart inhibit | |
| 8V1016.501-2 | ACOPOS servo drive, 3x 110-230 V / 1x 110-230 V, 3.6 A, 0.7 kW, coated, line filter, integrated braking resistor and electronic secure restart inhibit | |
| | **Optional accessories** | |
| | **Plug-in modules** | |
| 8AC110.60-2 | ACOPOS plug-in module, CAN interface | |
| 8AC110.60-3 | ACOPOS plug-in module, CAN interface | |
| 8AC114.60-2 | ACOPOS plug-in module, POWERLINK V2 interface | |
| 8AC120.60-1 | ACOPOS plug-in module, EnDat encoder and sine incremental encoder interface | |
| 8AC121.60-1 | ACOPOS plug-in module, HIPERFACE interface | |
| 8AC122.60-3 | ACOPOS plug-in module, resolver interface 10 kHz | |
| 8AC122.60-4 | ACOPOS plug-in module, resolver interface 10 kHz, no open line detection | |
| 8AC123.60-1 | ACOPOS plug-in module, incremental encoder and SSI absolute encoder interface | |
| 8AC125.60-1 | ACOPOS plug-in module, BiSS/SSI SinCos/SSI interface | |
| 8AC125.60-2 | ACOPOS plug-in module, BiSS encoder interface 5 V, baud rate 6.25 Mbit/s | |
| 8AC125.61-2 | ACOPOS plug-in module, BiSS encoder interface 12 V, baud rate 6.25 Mbit/s | |
| 8AC126.60-1 | ACOPOS plug-in module, EnDat 2.2 encoder interface | |
| 8AC130.60-1 | ACOPOS plug-in module, 8 digital I/O configurable in pairs as 24 V input or as output 400/100 mA, 2 digital outputs 2 A, order TB712 terminal block separately | |
| 8AC131.60-1 | ACOPOS plug-in module, 2 analog inputs ±10 V, 2 digital I/Os configurable as 24 V input or output 45 mA, order terminal block TB712 separately! | |
| 8AC132.60-1 | ACOPOS plug-in module, 2 analog inputs ±10 V | |
| 8AC140.60-3 | ACOPOS plug-in module, CPU, x86 100 MHz Intel compatible, 32 MB DRAM, 32 kB SRAM, removable application memory: CompactFlash, 1 CAN interface, 1 Ethernet interface 100 Base-T, 1 PROFIBUS DP slave interface, 1 RS232 interface, 3 digital I/O points configurable as 24 VDC input or 500 mA output, 1 analog input ±10 V, order program memory and 0TB708 terminal block separately | |
| 8AC140.61-3 | ACOPOS plug-in module, CPU, ARNC0, x86 100 MHz Intel compatible, 32 MB DRAM, 32 kB SRAM, removable application memory: CompactFlash, 1 CAN interface, 1 Ethernet interface 100 Base-T, 1 PROFIBUS DP slave interface, 1 RS232 interface, 3 digital I/O points configurable as 24 VDC input or 500 mA output, 1 analog input ±10 V, order program memory and 0TB708 terminal block separately | |
| 8AC141.60-2 | ACOPOS plug-in module, CPU, x86 100 MHz Intel compatible, 16 MB DRAM, 32 kB SRAM, removable application memory: CompactFlash, 2 CAN interfaces, 1 Ethernet interface 100 Base-T, 1 RS232 interface, 1 X2X Link Master interface, 3 digital I/O points configurable as 24 VDC input or 500 mA output, 1 analog input ±10 V, order program memory and 0TB704 and 0TB708 terminal blocks separately | |
| 8AC141.61-3 | ACOPOS plug-in module, CPU, ARNC0, x86 100 MHz Intel compatible, 32 MB DRAM, 32 kB SRAM, removable application memory: CompactFlash, 2 CAN interfaces, 1 Ethernet interface 100 Base-T, 1 RS232 interface, 1 X2X Link Master interface, 3 digital I/O points configurable as 24 VDC input or 500 mA output, 1 analog input ±10 V, order program memory and 0TB704 and 0TB708 terminal blocks separately | |
| | **Shielding component sets** | |
| 8X0040.00-1 | ACOPOS shielding components set for 8V1010.xxx-x and 8V1016.xxx-x | |
| | **Terminal sets** | |
| 8X0006.00-1 | ACOPOS accessories, plug set for 8V1010.50 and 8V1016.50 (1 phase) | |

Table 14: 8V1016.50-2, 8V1016.501-2 - Order data

### 2.3.4.2 Technical data

| Model number | 8V1016.50-2 | 8V1016.501-2 |
|---|---|---|
| **General information** | | |
| Note | - | Variant with partially coated circuit boards |
| B&R ID code | 0x18D7 | 0xA6D7 |
| Slots for plug-in modules | 3 | |
| Certification | | |
| CE | Yes | |
| cULus | Yes | |
| KC | Yes | |
| FSC | Yes | |
| **Power mains connection** | | |
| Permissible power mains forms | TT, TN [1] | |
| Mains input voltage | 3x 110 VAC to 230 VAC ±10% or 1x 110 VAC to 230 VAC ±10% | |
| Frequency | 50 / 60 Hz ±4% | |
| Installed load | Max. 2.1 kVA | |
| Starting current | 5 A (at 230 VAC) | |
| Switch-on interval | >10 s | |
| Integrated line filter in accordance with EN 61800-3, Category C3 [2] | Yes | |
| Power loss at max. device power without braking resistor | 110 W | |
| **DC bus connection** | | |
| DC bus capacitance | 2040 µF | |
| **24 VDC supply** | | |
| Input voltage [3] | 24 VDC +25% / -20% | |
| Input capacitance | 5600 µF | |
| Power consumption [4] | Max. 1.47 A + current for motor holding brake | |
| **Motor connection** | | |
| Quantity | 1 | |
| Continuous current [5] | 3.6 $A_{eff}$ | |
| Reduction of continuous current depending on the ambient temperature | | |
| Mains input voltage: 110 VAC | | |
| Switching frequency 5 kHz | No reduction | |
| Switching frequency 10 kHz | No reduction [6] | |
| Switching frequency 20 kHz | No reduction | |
| Mains input voltage: 230 VAC | | |
| Switching frequency 5 kHz | No reduction | |
| Switching frequency 10 kHz | No reduction [6] | |
| Switching frequency 20 kHz | No reduction | |
| Reduction of continuous current depending on the installation elevation | | |
| Starting at 500 m above sea level | 0.36 $A_{eff}$ per 1000 m | |
| Peak current | 12 $A_{eff}$ | |
| Nominal switching frequency | 10 kHz | |
| Possible switching frequencies | 5 / 10 / 20 kHz | |
| Electrical stress of the connected motor in accordance with IEC TS 60034-25 [7] | Limit value curve A | |
| Max. motor line length | 15 m | |
| Protective measures | | |
| Overload protection | Yes | |
| Short circuit and ground fault protection | Yes | |
| Max. output frequency | 598 Hz [8] | |
| **Motor holding brake connection** | | |
| Response threshold for open line monitoring | Approx. 245 mA | |
| Max. output current | 1.3 A | |
| Max. number of switching cycles | Unlimited since handled electronically | |
| **Braking resistors** | | |
| Peak power output | 1.9 kW | |
| Continuous power | 130 W | |
| **Limit switch and reference inputs** | | |
| Quantity | 3 | |
| Wiring | Sink | |
| Electrical isolation | | |
| Input - ACOPOS | Yes | |
| Input - Input | No | |
| Input voltage | | |
| Nominal | 24 VDC | |
| Maximum | 30 VDC | |
| Switching threshold | | |
| Low | <5 V | |
| High | >15 V | |

Table 15: 8V1016.50-2, 8V1016.501-2 - Technical data



Provided by Industrial Automation Co. • www.industrialautomationco.com • Parts & Repair: 877-727-8757

| Model number | 8V1016.50-2 | 8V1016.501-2 |
|---|---|---|
| Input current at nominal voltage | Approx. 4 mA | |
| Switching delay | Max. 2.0 ms | |
| Modulation compared to ground potential | Max. ±38 V | |
| **Enable inputs** | | |
| Quantity | 1 | |
| Wiring | Sink | |
| Electrical isolation | | |
| Input - ACOPOS | Yes | |
| Input voltage | | |
| Nominal | 24 VDC | |
| Maximum | 30 VDC | |
| Input current at nominal voltage | Approx. 30 mA | |
| Switching threshold | | |
| Low | <5 V | |
| High | >15 V | |
| Switching delay | | |
| Enable 0 -> 1, ready for PWM | Max. 100 µs | |
| Enable 1 -> 0, PWM off | Max. 2.0 ms | |
| Modulation compared to ground potential | Max. ±38 V | |
| OSSD signal connections [9)] | Not permitted | |
| **Trigger inputs** | | |
| Quantity | 2 | |
| Wiring | Sink | |
| Electrical isolation | | |
| Input - ACOPOS | Yes | |
| Input - Input | No | |
| Input voltage | | |
| Nominal | 24 VDC | |
| Maximum | 30 VDC | |
| Switching threshold | | |
| Low | <5 V | |
| High | >15 V | |
| Input current at nominal voltage | Approx. 10 mA | |
| Switching delay | | |
| Positive edge | 52 µs ±0.5 µs (digitally filtered) | |
| Negative edge | 53 µs ±0.5 µs (digitally filtered) | |
| Modulation compared to ground potential | Max. ±38 V | |
| **Operating conditions** | | |
| Permitted mounting orientations | | |
| Hanging vertically | Yes | |
| Lying horizontally | Yes | |
| Standing horizontally | No | |
| Installation at elevations above sea level | | |
| Nominal | 0 to 500 m | |
| Maximum [10)] | 2000 m | |
| Degree of pollution in accordance with EN 60664-1 | 2 (non-conductive pollution) | |
| Overvoltage category in accordance with IEC 60364-4-443:1999 | II | |
| EN 60529 protection | IP20 | |
| **Environmental conditions** | | |
| Temperature | | |
| Operation | | |
| Nominal | 5 to 40°C | |
| Maximum [11)] | 55°C | |
| Storage | -25 to 55°C | |
| Transport | -25 to 70°C | |
| Relative humidity | | |
| Operation | 5 to 85% | |
| Storage | 5 to 95% | |
| Transport | Max. 95% at 40°C | |
| **Mechanical characteristics** | | |
| Dimensions | | |
| Width | 58.5 mm | |
| Height | 257 mm | |
| Depth | 220 mm | |
| Weight | 2.5 kg | |

Table 15: 8V1016.50-2, 8V1016.501-2 - Technical data

1) In the USA, TT and TN power mains are commonly referred to as "Delta/Wye with grounded Wye neutral".
2) Limit values from EN 61800-3 C3 (second environment).
3) The permissible input voltage range is reduced when using motor holding brakes. The input voltage range should be selected so that the proper supply voltage for the motor holding brake can be maintained.
4) The current requirements depend on the configuration of the ACOPOS servo drive.
5) Valid in the following conditions: 230 VAC mains input voltage, nominal switching frequency, 40°C ambient temperature, installation altitude <500 m above sea level.



Provided by Industrial Automation Co. • www.industrialautomationco.com • Parts & Repair: 877-727-8757

6) Value for the nominal switching frequency.
7) If necessary, the stress of the motor isolation system be reduced by an additional externally-wired dU/dt choke. For example, the RWK 305 three-phase dU/dt choke from Schaffner (www.schaffner.com) can be used. IMPORTANT: Even when using a dU/dt choke, it is necessary to ensure that an EMC-compatible, low inductance shield connection is used!
8) The module's electrical output frequency (SCTRL_SPEED_ACT * MOTOR_POLEPAIRS) is monitored to protect against dual use in accordance with EC 428/2009 | 3A225. If the electrical output frequency of the module exceeds the limit value of 598 Hz uninterrupted for more than 0.5 s, then the current movement is aborted and error 6060 is output (power unit: limit speed exceeded).
9) OSSD (open signal switching device) signals are used to monitor signal lines for short circuits and cross faults.
10) Continuous operation of ACOPOS servo drives at altitudes ranging from 500 m to 2000 m above sea level is possible (taking the specified continuous current reductions into consideration). Requirements that go above and beyond this need to be arranged with B&R.
11) Continuous operation of ACOPOS servo drives at ambient temperatures ranging from 40°C to max. 55°C is possible (taking the specified continuous current reductions into consideration), but this will result in a shorter service life.



Provided by Industrial Automation Co. • www.industrialautomationco.com • Parts & Repair: 877-727-8757

### 2.3.5 Wiring

#### Pinout overview

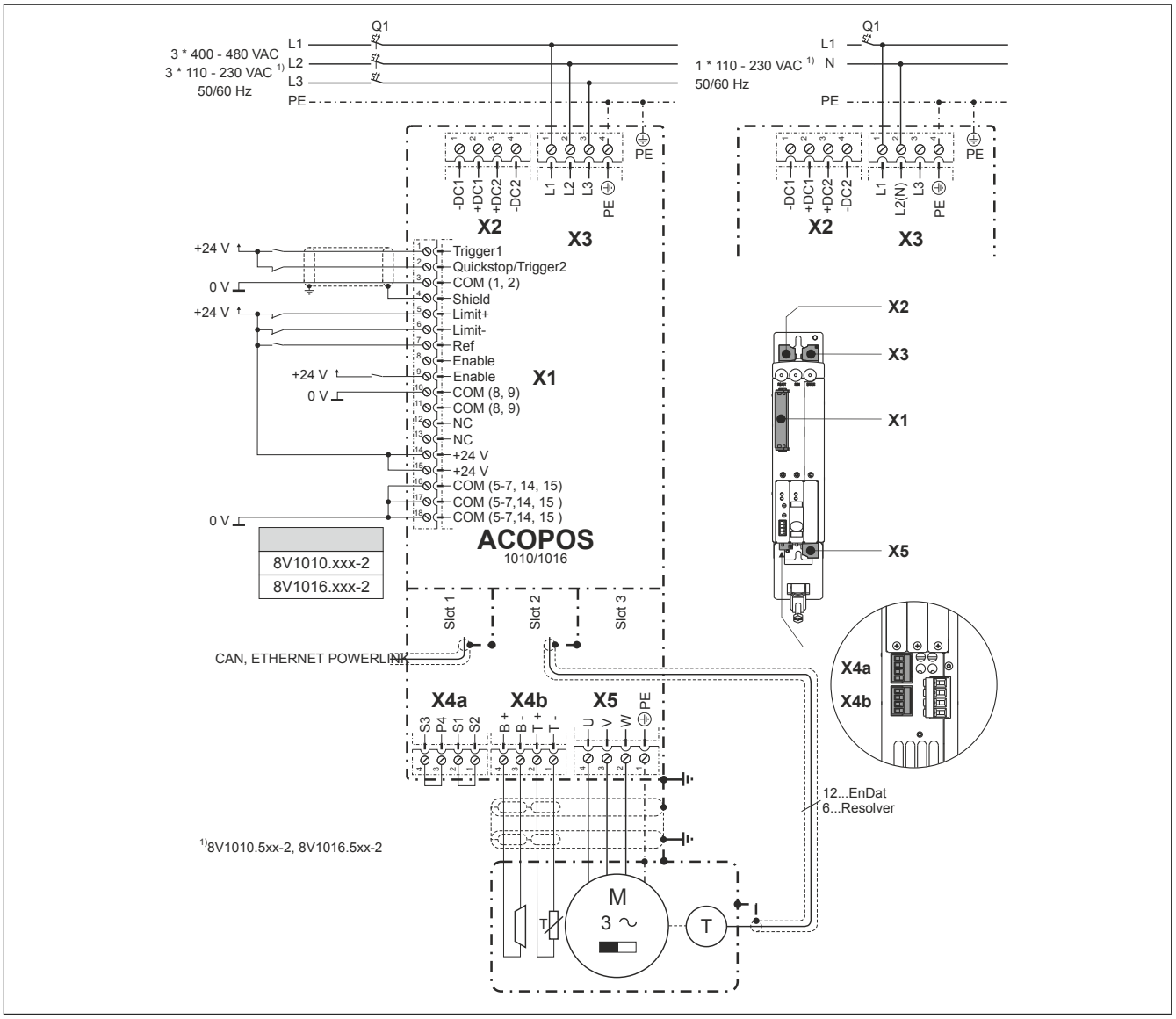


Figure 13: ACOPOS 1010, 1016 - Pinout overview

### 2.3.5.1 X1 - Pinout

| X1 | Pin | Name | Function |
|---|---|---|---|
| 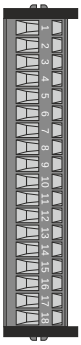 | 1 | Trigger1 | Trigger 1 |
| | 2 | Quickstop/Trigger2 | Quickstop/Trigger2 |
| | 3 | COM (1, 2) | Trigger 1, Quickstop/Trigger 2 0 V |
| | 4 | Shield | Shield |
| | 5 | Limit+ | Positive HW limit |
| | 6 | Limit- | Negative HW limit |
| | 7 | Ref | Reference switch |
| | 8 | Enable [1)] | Enable |
| | 9 | Enable [1)] | Enable |
| | 10 | COM (8, 9) | Enable 0 V |
| | 11 | COM (8, 9) | Enable 0 V |
| | 12 | --- | --- |
| | 13 | --- | --- |
| | 14 | +24 V | +24 V supply |
| | 15 | +24 V | +24 V supply |
| | 16 | COM (5-7, 14, 15) | 0 V supply |
| | 17 | COM (5-7, 14, 15) | 0 V supply |
| | 18 | COM (5-7, 14, 15) | 0 V supply |
| | The following connections are linked with each other internally in the device:<br>• Pin 8 --> Pin 9 (Enable)<br>• Pin 10 --> Pin 11 (Enable 0 V)<br>• Pin 14 --> Pin 15 (Supply +24 V)<br>• Pin 16 --> Pin 17 --> Pin 18 (Supply 0 V)<br><br>Terminal cross sections see "Overview of clampable cross sections" on page 266 | | |

Table 16: X1 - Pinout

1) The wiring is not permitted to exceed a total length of 30 m.

## Information:

**To obtain a defined reference of ground to ground potential, B&R recommends grounding the COM connections (5-7, 14, 15) on connector X1.**

### 2.3.5.2 X2 - Pinout

#### 2.3.5.2.1 8V1010.0xx-2, 8V1016.0xx-2

| X2 | Pin | Name | Function |
|---|---|---|---|
| 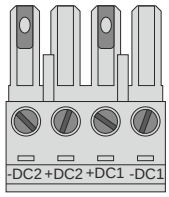 | 1 | -DC1 | U DC bus - |
| | 2 | +DC1 | U DC bus + |
| | 3 | +DC2 | U DC bus + |
| | 4 | -DC2 | U DC bus - |
| | Terminal cross sections see "Overview of clampable cross sections" on page 266 | | |

Table 17: X2 - Pinout

#### 2.3.5.2.2 8V1010.5xx-2, 8V1016.5xx-2

| X2 | Pin | Name | Function |
|---|---|---|---|
| 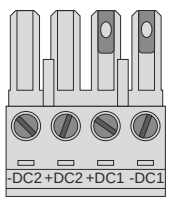 | 1 | -DC1 | U DC bus - |
| | 2 | +DC1 | U DC bus + |
| | 3 | +DC2 | U DC bus + |
| | 4 | -DC2 | U DC bus - |
| | Terminal cross sections see "Overview of clampable cross sections" on page 266 | | |

Table 18: X2 - Pinout



Provided by Industrial Automation Co. • www.industrialautomationco.com • Parts & Repair: 877-727-8757

## Warning!

**Only DC bus circuits of ACOPOS servo drives with the same supply voltage range are permitted to be connected in a group.**

**See "Supply voltage range for ACOPOS servo drives" on page 222.**

**Therefore, the DC bus circuits of ACOPOS servo drives 8Vxxxx.5xx-2 and 8Vxxxx.0xx-2 are not allowed to be linked! For this reason, the X2 plugs for ACOPOS servo drives 8Vxxxx.5xx-2 and 8Vxxxx.0xx-2 are keyed differently.**

**All ACOPOS servo drives 8Vxxxx.5xx-2 with a single-phase supply that should have their DC buses connected together must be connected to the same phase! If this is not done, the DC bus voltage increases to a level that is not permitted, causing the devices to be destroyed!**

### 2.3.5.3 X3 - Pinout

## Danger!

**Servo drives are not permitted to be operated directly on IT power systems and corner-grounded TN-S power systems with protective ground conductor!**

#### 2.3.5.3.1 8V1010.0xx-2, 8V1016.0xx-2

| X3 | Pin | Name | Function |
|---|---|---|---|
| 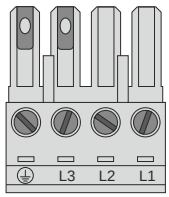 | 1 | L1 | Power mains connection L1 |
| | 2 | L2 | Power mains connection L2 |
| | 3 | L3 | Power mains connection L3 |
| | 4 | PE | Protective ground conductor |
| | Terminal cross sections see "Overview of clampable cross sections" on page 266 | | |

Table 19: X3 - Pinout

#### 2.3.5.3.2 8V1010.5xx-2, 8V1016.5xx-2

| X3 | Pin | Name | Function |
|---|---|---|---|
| 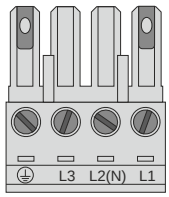 | 1 | L1 | Power mains connection L1 |
| | 2 | L2(N) | Power mains connection N |
| | 3 | L3 | --- |
| | 4 | PE | Protective ground conductor |
| | Terminal cross sections see "Overview of clampable cross sections" on page 266 | | |

Table 20: X3 - Pinout



Provided by Industrial Automation Co. • www.industrialautomationco.com • Parts & Repair: 877-727-8757

### 2.3.5.4 X4a, X4b - Pinout

| X4a | Pin | Description | Function |
|---|---|---|---|
| 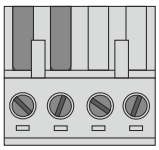 S3 S4 S1 S2 | 1 | S2 1) | Enabling, power supply of external holding brake (+) |
| | 2 | S1 1) | Enabling of external holding brake (+) |
| | 3 | S4 | Enabling, power supply of external holding brake (-) |
| | 4 | S3 | Enabling of external holding brake (-) |
| | Terminal cross section see "Overview of clampable cross sections" on page 266 | | |

Table 21: X4a - Pinout

1) If the holding brake is connected via an additional external relay contact (ground-in e.g. via connections S1/S2) instead of only via the internal transistor, then the internal quenching circuit has no effect! In this case, the customer must make sure that neither the relay contact nor the braking coil are damaged when switching off the brake. This can be done by interconnecting the coil or - better still - interconnecting the contact with a quenching circuit.

| X4b | Pin | Description | Function |
|---|---|---|---|
| 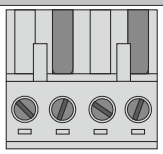 B+ B- T+ T- | 1 | T- | Temperature sensor - |
| | 2 | T+ | Temperature sensor + |
| | 3 | B- 1) | Brake - |
| | 4 | B+ 1) | Brake + |
| | Terminal cross section see "Overview of clampable cross sections" on page 266 | | |

Table 22: X4b - Pinout

1) If the holding brake is connected via an additional external relay contact (ground-in e.g. via connections S1/S2) instead of only via the internal transistor, then the internal quenching circuit has no effect! In this case, the customer must make sure that neither the relay contact nor the braking coil are damaged when switching off the brake. This can be done by interconnecting the coil or - better still - interconnecting the contact with a quenching circuit.

## Danger!

**The connections for the motor temperature sensors and the motor holding brake are safely isolated circuits. These connections are therefore only permitted to be connected to devices or components that have sufficient isolation per IEC 60364-4-41 or EN 61800-5-1.**

## Caution!

**If B+ and B- are swapped when connecting the permanent magnet holding brakes, then the brakes cannot be opened! ACOPOS servo drives cannot determine if a holding brake is connected with reverse polarity!**



Provided by Industrial Automation Co. • www.industrialautomationco.com • Parts & Repair: 877-727-8757

### 2.3.5.4.1 Wiring the connections for the motor holding brake

The power supply, enabling and monitoring of the output for the motor holding brake can be carried out in three different ways via the wiring of connector X4a:

| | Figure | Description |
|---|---|---|
| 1 | 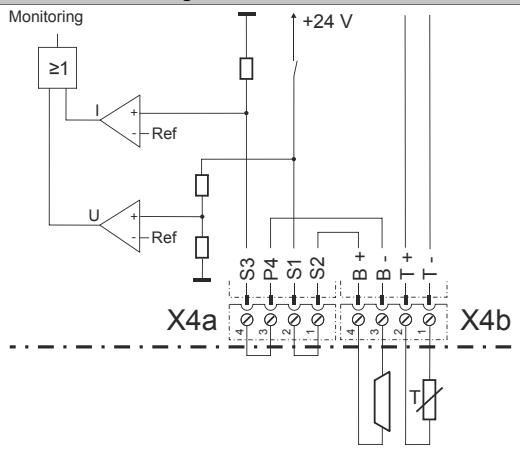 | • **Power supply:** Internal via the ACOPOS servo drive<br>• **Enabling:** Internal via the ACOPOS servo drive<br>• **Monitoring:** Internal via the ACOPOS servo drive<br>Jumpers must be placed between connections S1 and S2 as well as S3 and S4 on connector X4a. [1] |
| 2 | 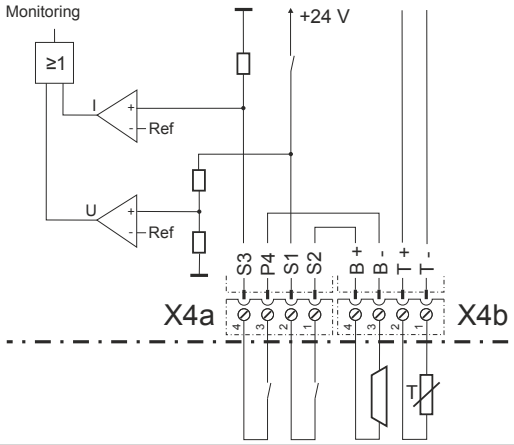 | • **Power supply:** Internal via the ACOPOS servo drive<br>• **Enabling:** Possible internally by the ACOPOS servo drive and externally by dry contacts [2]<br>• **Monitoring:** Internal via the ACOPOS servo drive<br>**Information:**<br>**ACOPOS-internal monitoring must be configured according to the requirements of the application.** [3] |
| 3 | 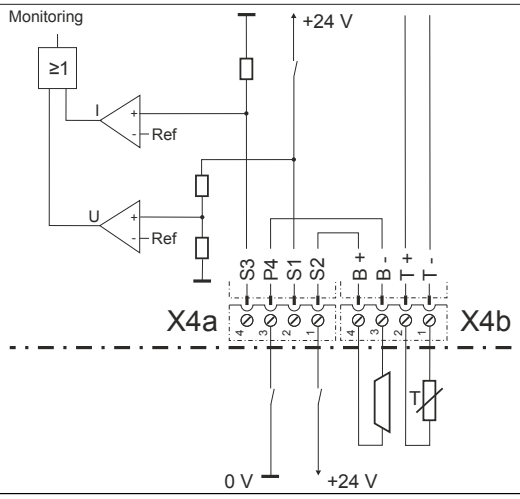 | • **Power supply:** External<br>• **Enabling:** External<br>• **Monitoring:** External<br>**Information:**<br>**ACOPOS-internal monitoring cannot be used here; it must therefore be disabled using software.** [4] |

Table 23: Enabling the external holding brake

1) The two jumpers are already wired on connector X4a supplied with ACOPOS servo drives.
2) External dry contacts can be connected between S1 and S2 and between S3 and S4. This makes it possible to enable the holding brake via external safety circuits independently of the control integrated in the ACOPOS servo drive.
3) Configuration takes place using ParID 90 (1 ... Internal monitoring active, 5 ... Internal monitoring not active).
4) Disabling takes place using ParID 90 (5 ... Internal monitoring not active).



Provided by Industrial Automation Co. • www.industrialautomationco.com • Parts & Repair: 877-727-8757

### 2.3.5.5 X5 - Pinout

| X5 | Pin | Name | Function |
|---|---|---|---|
| 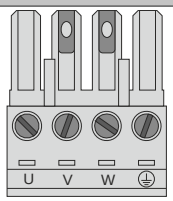 | 1 | PE | Protective ground conductor |
| | 2 | W | Motor connection W |
| | 3 | V | Motor connection V |
| | 4 | U | Motor connection U |
| | Terminal cross sections see "Overview of clampable cross sections" on page 266 | | |

Table 24: X5 - Pinout

### 2.3.5.6 Additional protective ground connection (PE)

The protective ground conductor is connected to the M5 threaded bolt provided using a cable lug.

For information about dimensioning, see "Protective ground connection (PE)" on page 222.

| Figure | Pin | Name | Function |
|---|---|---|---|
| 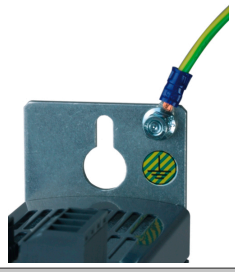 | --- | PE | Protective ground conductor |
| **Terminal cross sections** | **[mm²]** | | **AWG** |
| Cable lug for M5 threaded bolt | 0.25 - 16 | | 23 - 5 |

Table 25: Protective ground connection (PE) - ACOPOS

## Danger!

**Before turning on the servo drive, make sure that the housing is properly connected to ground (PE rail). The ground connection must be established even when testing the drive or operating it for a short time!**

### 2.3.5.7 Input/output circuit diagram

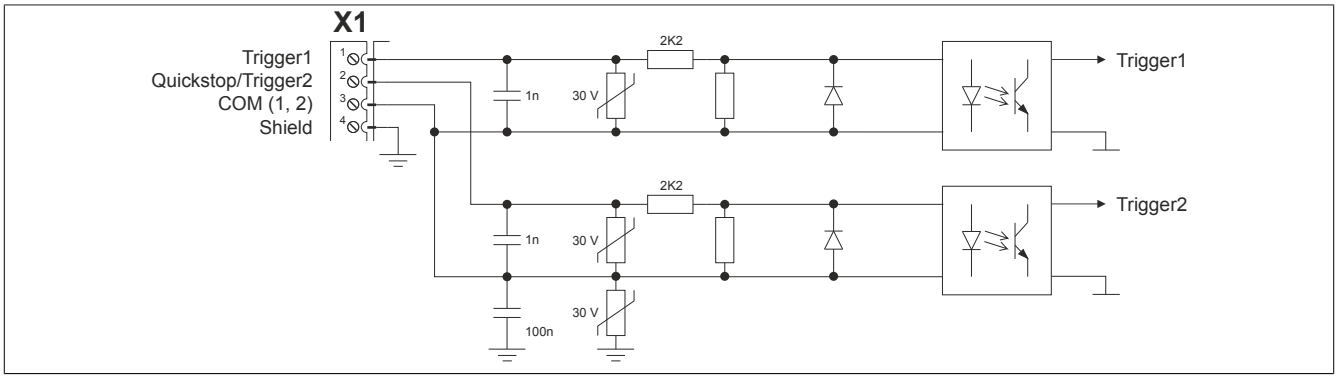


Figure 14: Trigger



Provided by Industrial Automation Co. • www.industrialautomationco.com • Parts & Repair: 877-727-8757

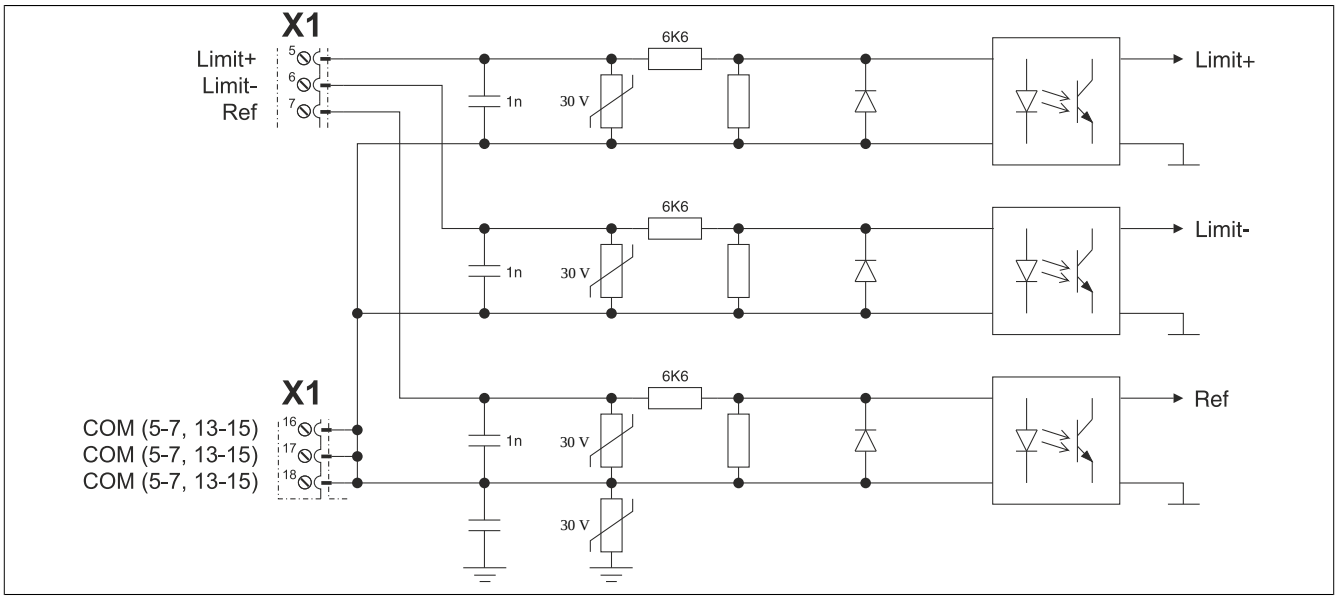


Figure 15: Limit

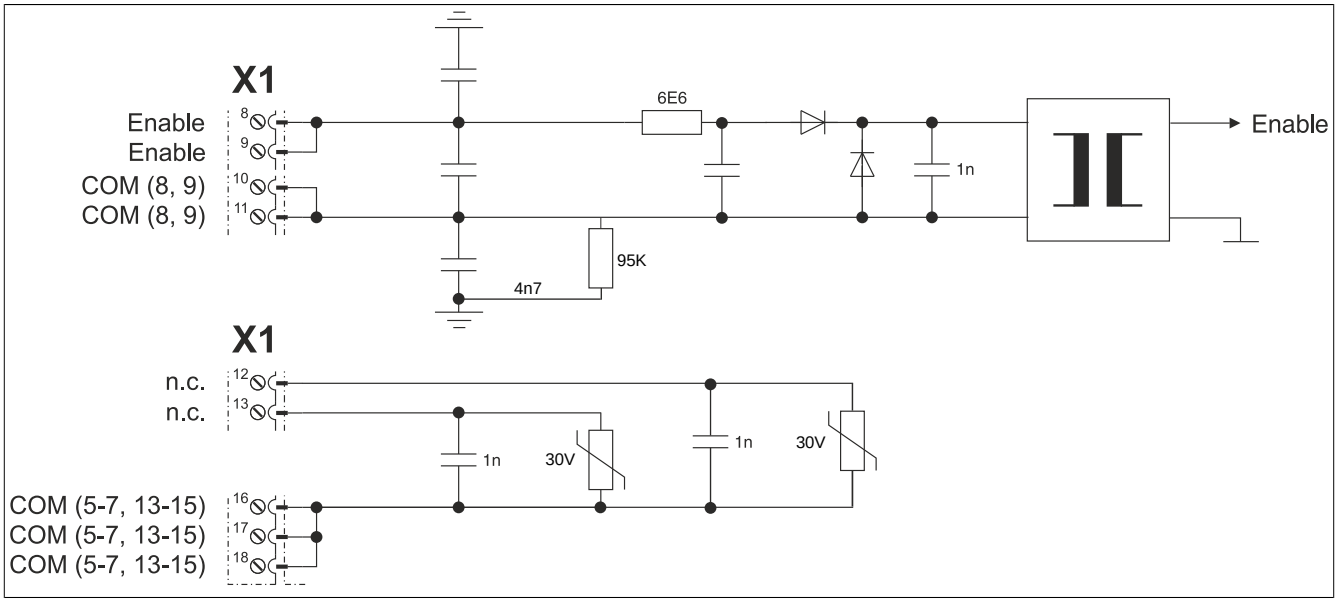


Figure 16: Enable



Provided by Industrial Automation Co. • www.industrialautomationco.com • Parts & Repair: 877-727-8757

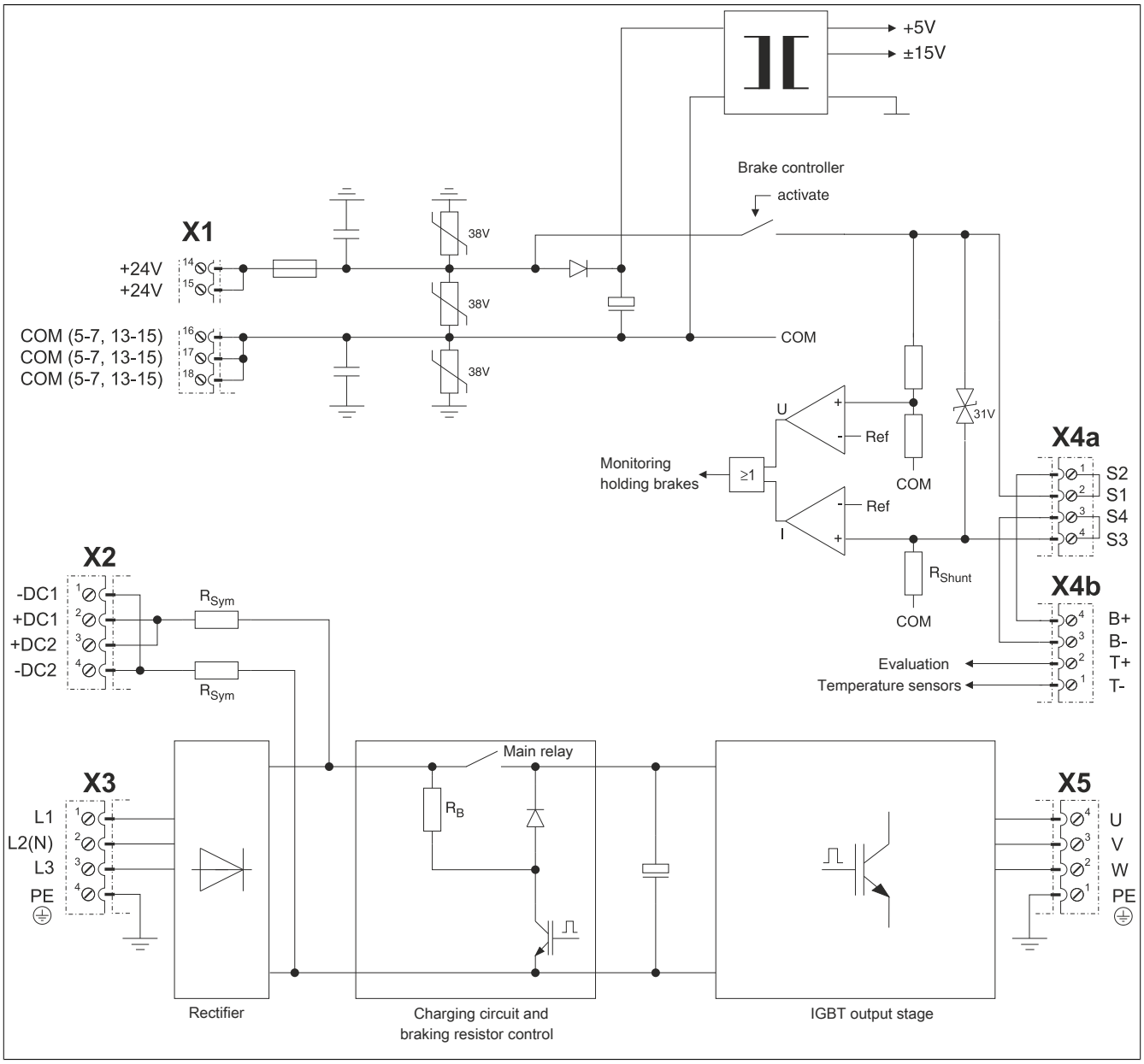


Figure 17: Input/output circuit diagram - ACOPOS 1010, 1016



Provided by Industrial Automation Co. • www.industrialautomationco.com • Parts & Repair: 877-727-8757

# 2.4 ACOPOS 1022, 1045, 1090

## 2.4.1 ACOPOS 1022

### 2.4.1.1 Order data

| Model number | Short description | Figure |
|---|---|---|
| | **Servo drives** |  |
| 8V1022.00-2 | ACOPOS servo drive, 3x 400-480 V, 2.2 A, 1 kW, line filter, integrated braking resistor and electronic secure restart inhibit | |
| 8V1022.001-2 | ACOPOS servo drive, 3x 400-480 V, 2.2 A, 1 kW, coated, line filter, integrated braking resistor and electronic secure restart inhibit | |
| | **Optional accessories** | |
| | **Plug-in modules** | |
| 8AC110.60-2 | ACOPOS plug-in module, CAN interface | |
| 8AC110.60-3 | ACOPOS plug-in module, CAN interface | |
| 8AC114.60-2 | ACOPOS plug-in module, POWERLINK V2 interface | |
| 8AC120.60-1 | ACOPOS plug-in module, EnDat encoder and sine incremental encoder interface | |
| 8AC121.60-1 | ACOPOS plug-in module, HIPERFACE interface | |
| 8AC122.60-3 | ACOPOS plug-in module, resolver interface 10 kHz | |
| 8AC122.60-4 | ACOPOS plug-in module, resolver interface 10 kHz, no open line detection | |
| 8AC123.60-1 | ACOPOS plug-in module, incremental encoder and SSI absolute encoder interface | |
| 8AC125.60-1 | ACOPOS plug-in module, BiSS/SSI SinCos/SSI interface | |
| 8AC125.60-2 | ACOPOS plug-in module, BiSS encoder interface 5 V, baud rate 6.25 Mbit/s | |
| 8AC125.61-2 | ACOPOS plug-in module, BiSS encoder interface 12 V, baud rate 6.25 Mbit/s | |
| 8AC126.60-1 | ACOPOS plug-in module, EnDat 2.2 encoder interface | |
| 8AC130.60-1 | ACOPOS plug-in module, 8 digital I/O configurable in pairs as 24 V input or as output 400/100 mA, 2 digital outputs 2 A, order TB712 terminal block separately | |
| 8AC131.60-1 | ACOPOS plug-in module, 2 analog inputs ±10 V, 2 digital I/Os configurable as 24 V input or output 45 mA, order terminal block TB712 separately! | |
| 8AC132.60-1 | ACOPOS plug-in module, 2 analog inputs ±10 V | |
| 8AC140.60-3 | ACOPOS plug-in module, CPU, x86 100 MHz Intel compatible, 32 MB DRAM, 32 kB SRAM, removable application memory: CompactFlash, 1 CAN interface, 1 Ethernet interface 100 Base-T, 1 PROFIBUS DP slave interface, 1 RS232 interface, 3 digital I/O points configurable as 24 VDC input or 500 mA output, 1 analog input ±10 V, order program memory and 0TB708 terminal block separately | |
| 8AC140.61-3 | ACOPOS plug-in module, CPU, ARNC0, x86 100 MHz Intel compatible, 32 MB DRAM, 32 kB SRAM, removable application memory: CompactFlash, 1 CAN interface, 1 Ethernet interface 100 Base-T, 1 PROFIBUS DP slave interface, 1 RS232 interface, 3 digital I/O points configurable as 24 VDC input or 500 mA output, 1 analog input ±10 V, order program memory and 0TB708 terminal block separately | |
| 8AC141.60-2 | ACOPOS plug-in module, CPU, x86 100 MHz Intel compatible, 16 MB DRAM, 32 kB SRAM, removable application memory: CompactFlash, 2 CAN interfaces, 1 Ethernet interface 100 Base-T, 1 RS232 interface, 1 X2X Link Master interface, 3 digital I/O points configurable as 24 VDC input or 500 mA output, 1 analog input ±10 V, order program memory and 0TB704 and 0TB708 terminal blocks separately | |
| 8AC141.61-3 | ACOPOS plug-in module, CPU, ARNC0, x86 100 MHz Intel compatible, 32 MB DRAM, 32 kB SRAM, removable application memory: CompactFlash, 2 CAN interfaces, 1 Ethernet interface 100 Base-T, 1 RS232 interface, 1 X2X Link Master interface, 3 digital I/O points configurable as 24 VDC input or 500 mA output, 1 analog input ±10 V, order program memory and 0TB704 and 0TB708 terminal blocks separately | |
| | **Shielding component sets** | |
| 8X0010.00-1 | ACOPOS shielding components set for 8V1022.xxx-x up to 8V1090.xxx-x | |
| | **Terminal sets** | |
| 8X0001.00-1 | ACOPOS accessories, plug set for 8V1010.00 and 8V1090.00 (3 phase) | |

Table 26: 8V1022.00-2, 8V1022.001-2 - Order data

### 2.4.1.2 Technical data

| Model number | 8V1022.00-2 | 8V1022.001-2 |
|---|---|---|
| **General information** | | |
| Note | - | Variant with partially coated circuit boards |
| B&R ID code | 0x1284 | 0xA099 |
| Slots for plug-in modules | 4 | |
| Certification | | |
| CE | Yes | |
| cULus | Yes | |
| KC | Yes | |
| FSC | Yes | |
| **Power mains connection** | | |
| Permissible power mains forms | TT, TN [1] | |
| Mains input voltage | 3x 400 VAC to 480 VAC ±10% | |
| Frequency | 50 / 60 Hz ±4% | |
| Installed load | Max. 3 kVA | |
| Starting current at 400 VAC | 4 A | |
| Switch-on interval | >10 s | |
| Integrated line filter in accordance with EN 61800-3, Category C3 [2] | Yes | |
| Power loss at max. device power without braking resistor | Approx. 120 W | |
| **DC bus connection** | | |
| DC bus capacitance | 235 µF | |
| **24 VDC supply** | | |
| Input voltage [3] | 24 VDC ±25% | |
| Input capacitance | 8200 µF | |
| Power consumption [4] | Max. 2.5 A + current for motor holding brake | |
| **Motor connection** | | |
| Quantity | 1 | |
| Continuous current [5] | 2.2 $A_{eff}$ | |
| Reduction of continuous current depending on the ambient temperature | | |
| Mains input voltage: 400 VAC | | |
| Switching frequency 5 kHz | No reduction | |
| Switching frequency 10 kHz | No reduction | |
| Switching frequency 20 kHz | No reduction [6] | |
| Mains input voltage: 480 VAC | | |
| Switching frequency 5 kHz | No reduction | |
| Switching frequency 10 kHz | No reduction | |
| Switching frequency 20 kHz | 0.13 $A_{eff}$ per °C (starting at 51°C) [6] | |
| Reduction of continuous current depending on the installation elevation | | |
| Starting at 500 m above sea level | 0.22 $A_{eff}$ per 1000 m | |
| Peak current | 14 $A_{eff}$ | |
| Nominal switching frequency | 20 kHz | |
| Possible switching frequencies | 5 / 10 / 20 kHz | |
| Electrical stress of the connected motor in accordance with IEC TS 60034-25 [7] | Limit value curve A | |
| Max. motor line length | 25 m | |
| Protective measures | | |
| Overload protection | Yes | |
| Short circuit and ground fault protection | Yes | |
| Max. output frequency | 598 Hz [8] | |
| **Motor holding brake connection** | | |
| Response threshold for open line monitoring | Approx. 385 mA | |
| Max. output current | 1 A | |
| Max. number of switching cycles | Unlimited since handled electronically | |
| **Braking resistors** | | |
| Peak power output | 3.5 kW | |
| Continuous power | 130 W | |
| **Limit switch and reference inputs** | | |
| Quantity | 3 | |
| Wiring | Sink | |
| Electrical isolation | | |
| Input - ACOPOS | Yes | |
| Input - Input | No | |
| Input voltage | | |
| Nominal | 24 VDC | |
| Maximum | 30 VDC | |
| Switching threshold | | |
| Low | <5 V | |
| High | >15 V | |

Table 27: 8V1022.00-2, 8V1022.001-2 - Technical data



Provided by Industrial Automation Co. • www.industrialautomationco.com • Parts & Repair: 877-727-8757

| Model number | 8V1022.00-2 | 8V1022.001-2 |
|---|---|---|
| Input current at nominal voltage | Approx. 4 mA | |
| Switching delay | Max. 2.0 ms | |
| Modulation compared to ground potential | Max. ±38 V | |
| **Enable inputs** | | |
| Quantity | 1 | |
| Wiring | Sink | |
| Electrical isolation | | |
| Input - ACOPOS | Yes | |
| Input voltage | | |
| Nominal | 24 VDC | |
| Maximum | 30 VDC | |
| Input current at nominal voltage | Approx. 30 mA | |
| Switching threshold | | |
| Low | <5 V | |
| High | >15 V | |
| Switching delay | | |
| Enable 0 -> 1, ready for PWM | Max. 100 µs | |
| Enable 1 -> 0, PWM off | Max. 2.0 ms | |
| Modulation compared to ground potential | Max. ±38 V | |
| OSSD signal connections [9)] | Not permitted | |
| **Trigger inputs** | | |
| Quantity | 2 | |
| Wiring | Sink | |
| Electrical isolation | | |
| Input - ACOPOS | Yes | |
| Input - Input | No | |
| Input voltage | | |
| Nominal | 24 VDC | |
| Maximum | 30 VDC | |
| Switching threshold | | |
| Low | <5 V | |
| High | >15 V | |
| Input current at nominal voltage | Approx. 10 mA | |
| Switching delay | | |
| Positive edge | 52 µs ±0.5 µs (digitally filtered) | |
| Negative edge | 53 µs ±0.5 µs (digitally filtered) | |
| Modulation compared to ground potential | Max. ±38 V | |
| **Electrical characteristics** | | |
| Discharge capacitance | 660 nF | |
| **Operating conditions** | | |
| Permitted mounting orientations | | |
| Hanging vertically | Yes | |
| Lying horizontally | Yes | |
| Standing horizontally | No | |
| Installation at elevations above sea level | | |
| Nominal | 0 to 500 m | |
| Maximum [10)] | 2000 m | |
| Degree of pollution in accordance with EN 60664-1 | 2 (non-conductive pollution) | |
| Overvoltage category in accordance with IEC 60364-4-443:1999 | II | |
| EN 60529 protection | IP20 | |
| **Environmental conditions** | | |
| Temperature | | |
| Operation | | |
| Nominal | 5 to 40°C | |
| Maximum [11)] | 55°C | |
| Storage | -25 to 55°C | |
| Transport | -25 to 70°C | |
| Relative humidity | | |
| Operation | 5 to 85% | |
| Storage | 5 to 95% | |
| Transport | Max. 95% at 40°C | |
| **Mechanical characteristics** | | |
| Dimensions | | |
| Width | 70.5 mm | |
| Height | 375 mm | |
| Depth | 235.5 mm | |
| Weight | 4.0 kg | |

Table 27: 8V1022.00-2, 8V1022.001-2 - Technical data

1) In the USA, TT and TN power mains are commonly referred to as "Delta/Wye with grounded Wye neutral".
2) Limit values from EN 61800-3 C3 (second environment).
3) The permissible input voltage range is reduced when using motor holding brakes. The input voltage range should be selected so that the proper supply voltage for the motor holding brake can be maintained.
4) The current requirements depend on the configuration of the ACOPOS servo drive.



Provided by Industrial Automation Co. • www.industrialautomationco.com • Parts & Repair: 877-727-8757

5) Valid in the following conditions: 400 VAC mains input voltage, nominal switching frequency, 40°C ambient temperature, installation altitude <500 m above sea level.
6) Value for the nominal switching frequency.
7) If necessary, the stress of the motor isolation system be reduced by an additional externally-wired dU/dt choke. For example, the RWK 305 three-phase dU/dt choke from Schaffner (www.schaffner.com) can be used. IMPORTANT: Even when using a dU/dt choke, it is necessary to ensure that an EMC-compatible, low inductance shield connection is used!
8) The module's electrical output frequency (SCTRL_SPEED_ACT * MOTOR_POLEPAIRS) is monitored to protect against dual use in accordance with EC 428/2009 | 3A225. If the electrical output frequency of the module exceeds the limit value of 598 Hz uninterrupted for more than 0.5 s, then the current movement is aborted and error 6060 is output (power unit: limit speed exceeded).
9) OSSD (open signal switching device) signals are used to monitor signal lines for short circuits and cross faults.
10) Continuous operation of ACOPOS servo drives at altitudes ranging from 500 m to 2000 m above sea level is possible (taking the specified continuous current reductions into consideration). Requirements that go above and beyond this need to be arranged with B&R.
11) Continuous operation of ACOPOS servo drives at ambient temperatures ranging from 40°C to max. 55°C is possible (taking the specified continuous current reductions into consideration), but this will result in a shorter service life.



Provided by Industrial Automation Co. • www.industrialautomationco.com • Parts & Repair: 877-727-8757

## 2.4.2 ACOPOS 1045

### 2.4.2.1 Order data

| Model number | Short description | Figure |
|---|---|---|
| | **Servo drives** |  |
| 8V1045.00-2 | ACOPOS servo drive, 3x 400-480 V, 4.4 A, 2 kW, line filter, braking resistor and electronic secure restart inhibit integrated | |
| 8V1045.001-2 | ACOPOS servo drive, 3x 400-480 V, 4.4 A, 2 kW, coated, line filter, integrated braking resistor and electronic secure restart inhibit | |
| | **Optional accessories** | |
| | **Plug-in modules** | |
| 8AC110.60-2 | ACOPOS plug-in module, CAN interface | |
| 8AC110.60-3 | ACOPOS plug-in module, CAN interface | |
| 8AC114.60-2 | ACOPOS plug-in module, POWERLINK V2 interface | |
| 8AC120.60-1 | ACOPOS plug-in module, EnDat encoder and sine incremental encoder interface | |
| 8AC121.60-1 | ACOPOS plug-in module, HIPERFACE interface | |
| 8AC122.60-3 | ACOPOS plug-in module, resolver interface 10 kHz | |
| 8AC122.60-4 | ACOPOS plug-in module, resolver interface 10 kHz, no open line detection | |
| 8AC123.60-1 | ACOPOS plug-in module, incremental encoder and SSI absolute encoder interface | |
| 8AC125.60-1 | ACOPOS plug-in module, BiSS/SSI SinCos/SSI interface | |
| 8AC125.60-2 | ACOPOS plug-in module, BiSS encoder interface 5 V, baud rate 6.25 Mbit/s | |
| 8AC125.61-2 | ACOPOS plug-in module, BiSS encoder interface 12 V, baud rate 6.25 Mbit/s | |
| 8AC126.60-1 | ACOPOS plug-in module, EnDat 2.2 encoder interface | |
| 8AC130.60-1 | ACOPOS plug-in module, 8 digital I/O configurable in pairs as 24 V input or as output 400/100 mA, 2 digital outputs 2 A, order TB712 terminal block separately | |
| 8AC131.60-1 | ACOPOS plug-in module, 2 analog inputs ±10 V, 2 digital I/Os configurable as 24 V input or output 45 mA, order terminal block TB712 separately! | |
| 8AC132.60-1 | ACOPOS plug-in module, 2 analog inputs ±10 V | |
| 8AC140.60-3 | ACOPOS plug-in module, CPU, x86 100 MHz Intel compatible, 32 MB DRAM, 32 kB SRAM, removable application memory: CompactFlash, 1 CAN interface, 1 Ethernet interface 100 Base-T, 1 PROFIBUS DP slave interface, 1 RS232 interface, 3 digital I/O points configurable as 24 VDC input or 500 mA output, 1 analog input ±10 V, order program memory and 0TB708 terminal block separately | |
| 8AC140.61-3 | ACOPOS plug-in module, CPU, ARNC0, x86 100 MHz Intel compatible, 32 MB DRAM, 32 kB SRAM, removable application memory: CompactFlash, 1 CAN interface, 1 Ethernet interface 100 Base-T, 1 PROFIBUS DP slave interface, 1 RS232 interface, 3 digital I/O points configurable as 24 VDC input or 500 mA output, 1 analog input ±10 V, order program memory and 0TB708 terminal block separately | |
| 8AC141.60-2 | ACOPOS plug-in module, CPU, x86 100 MHz Intel compatible, 16 MB DRAM, 32 kB SRAM, removable application memory: CompactFlash, 2 CAN interfaces, 1 Ethernet interface 100 Base-T, 1 RS232 interface, 1 X2X Link Master interface, 3 digital I/O points configurable as 24 VDC input or 500 mA output, 1 analog input ±10 V, order program memory and 0TB704 and 0TB708 terminal blocks separately | |
| 8AC141.61-3 | ACOPOS plug-in module, CPU, ARNC0, x86 100 MHz Intel compatible, 32 MB DRAM, 32 kB SRAM, removable application memory: CompactFlash, 2 CAN interfaces, 1 Ethernet interface 100 Base-T, 1 RS232 interface, 1 X2X Link Master interface, 3 digital I/O points configurable as 24 VDC input or 500 mA output, 1 analog input ±10 V, order program memory and 0TB704 and 0TB708 terminal blocks separately | |
| | **Shielding component sets** | |
| 8X0010.00-1 | ACOPOS shielding components set for 8V1022.xxx-x up to 8V1090.xxx-x | |
| | **Terminal sets** | |
| 8X0001.00-1 | ACOPOS accessories, plug set for 8V1010.00 and 8V1090.00 (3 phase) | |

Table 28: 8V1045.00-2, 8V1045.001-2 - Order data

### 2.4.2.2 Technical data

| Model number | 8V1045.00-2 | 8V1045.001-2 |
|---|---|---|
| **General information** | | |
| Note | - | Variant with partially coated circuit boards |
| B&R ID code | 0x12C7 | 0xA09A |
| Slots for plug-in modules | 4 | |
| Certification | | |
| CE | Yes | |
| cULus | Yes | |
| KC | Yes | |
| FSC | Yes | |
| **Power mains connection** | | |
| Permissible power mains forms | TT, TN [1] | TT, TN [2] |
| Mains input voltage | 3x 400 VAC to 480 VAC ±10% | |
| Frequency | 50 / 60 Hz ±4% | |
| Installed load | Max. 5 kVA | |
| Starting current at 400 VAC | 7 A | |
| Switch-on interval | >10 s | |
| Integrated line filter in accordance with EN 61800-3, Category C3 [3] | Yes | |
| Power loss at max. device power without braking resistor | Approx. 180 W | |
| **DC bus connection** | | |
| DC bus capacitance | 235 µF | |
| **24 VDC supply** | | |
| Input voltage [4] | 24 VDC ±25% | |
| Input capacitance | 8200 µF | |
| Power consumption [5] | Max. 2.5 A + current for motor holding brake | |
| **Motor connection** | | |
| Quantity | 1 | |
| Continuous current [6] | 4.4 $A_{eff}$ | 4.4 $A_{eff}$ |
| Reduction of continuous current depending on the ambient temperature | | |
| Mains input voltage: 400 VAC | | |
| Switching frequency 5 kHz | No reduction | |
| Switching frequency 10 kHz | No reduction | |
| Switching frequency 20 kHz | 0.13 $A_{eff}$ per °C (starting at 45°C) [7] | |
| Mains input voltage: 480 VAC | | |
| Switching frequency 5 kHz | No reduction | |
| Switching frequency 10 kHz | No reduction | |
| Switching frequency 20 kHz | 0.13 $A_{eff}$ per °C (starting at 35°C) [7] | |
| Reduction of continuous current depending on the installation elevation | | |
| Starting at 500 m above sea level | 0.44 $A_{eff}$ per 1000 m | |
| Peak current | 24 $A_{eff}$ | 24 $A_{eff}$ |
| Nominal switching frequency | 20 kHz | |
| Possible switching frequencies | 5 / 10 / 20 kHz | |
| Electrical stress of the connected motor in accordance with IEC TS 60034-25 [8] | Limit value curve A | |
| Max. motor line length | 25 m | |
| Protective measures | | |
| Overload protection | Yes | |
| Short circuit and ground fault protection | Yes | |
| Max. output frequency | 598 Hz [9] | 598 Hz [10] |
| **Motor holding brake connection** | | |
| Response threshold for open line monitoring | Approx. 385 mA | |
| Max. output current | 1 A | |
| Max. number of switching cycles | Unlimited since done electronically | Unlimited since handled electronically |
| **Braking resistors** | | |
| Peak power output | 7 kW | |
| Continuous power | 200 W | |
| **Limit switch and reference inputs** | | |
| Quantity | 3 | |
| Wiring | Sink | |
| Electrical isolation | | |
| Input - ACOPOS | Yes | |
| Input - Input | No | |
| Input voltage | | |
| Nominal | 24 VDC | |
| Maximum | 30 VDC | |
| Switching threshold | | |
| Low | <5 V | |
| High | >15 V | |

Table 29: 8V1045.00-2, 8V1045.001-2 - Technical data



Provided by Industrial Automation Co. • www.industrialautomationco.com • Parts & Repair: 877-727-8757

| Model number | 8V1045.00-2 | 8V1045.001-2 |
|---|---|---|
| Input current at nominal voltage | Approx. 4 mA | |
| Switching delay | Max. 2.0 ms | |
| Modulation compared to ground potential | Max. ±38 V | |
| **Enable inputs** | | |
| Quantity | 1 | |
| Wiring | Sink | |
| Electrical isolation | | |
| Input - ACOPOS | Yes | |
| Input voltage | | |
| Nominal | 24 VDC | |
| Maximum | 30 VDC | |
| Input current at nominal voltage | Approx. 30 mA | |
| Switching threshold | | |
| Low | <5 V | |
| High | >15 V | |
| Switching delay | | |
| Enable 0 -> 1, ready for PWM | Max. 100 µs | |
| Enable 1 -> 0, PWM off | Max. 2.0 ms | |
| Modulation compared to ground potential | Max. ±38 V | |
| OSSD signal connections [11)] | Not permitted | |
| **Trigger inputs** | | |
| Quantity | 2 | |
| Wiring | Sink | |
| Electrical isolation | | |
| Input - ACOPOS | Yes | |
| Input - Input | No | |
| Input voltage | | |
| Nominal | 24 VDC | |
| Maximum | 30 VDC | |
| Switching threshold | | |
| Low | <5 V | |
| High | >15 V | |
| Input current at nominal voltage | Approx. 10 mA | |
| Switching delay | | |
| Positive edge | 52 µs ±0.5 µs (digitally filtered) | |
| Negative edge | 53 µs ±0.5 µs (digitally filtered) | |
| Modulation compared to ground potential | Max. ±38 V | |
| **Electrical characteristics** | | |
| Discharge capacitance | 660 nF | |
| **Operating conditions** | | |
| Permitted mounting orientations | | |
| Hanging vertically | Yes | |
| Lying horizontally | Yes | |
| Standing horizontally | No | |
| Installation at elevations above sea level | | |
| Nominal | 0 to 500 m | |
| Maximum [12)] | 2000 m | |
| Degree of pollution in accordance with EN 60664-1 | 2 (non-conductive pollution) | |
| Overvoltage category in accordance with IEC 60364-4-443:1999 | II | |
| EN 60529 protection | IP20 | |
| **Environmental conditions** | | |
| Temperature | | |
| Operation | | |
| Nominal | 5 to 40°C | |
| Maximum [13)] | 55°C | |
| Storage | -25 to 55°C | |
| Transport | -25 to 70°C | |
| Relative humidity | | |
| Operation | 5 to 85% | |
| Storage | 5 to 95% | |
| Transport | Max. 95% at 40°C | |
| **Mechanical characteristics** | | |
| Dimensions | | |
| Width | 70.5 mm | |
| Height | 375 mm | |
| Depth | 235.5 mm | |
| Weight | 4.1 kg | |

Table 29: 8V1045.00-2, 8V1045.001-2 - Technical data

1) In the USA, the terms "Delta / Wye with Grounded Wye neutral" are common for TT and TN power mains.
2) In the USA, TT and TN power mains are commonly referred to as "Delta/Wye with grounded Wye neutral".
3) Limit values from EN 61800-3 C3 (second environment).
4) When using motor holding brakes, the valid input voltage range is reduced. The input voltage range should be selected so that the proper supply voltage for the motor holding brake can be maintained.



Provided by Industrial Automation Co. • www.industrialautomationco.com • Parts & Repair: 877-727-8757

5) The current requirements depend on the configuration of the ACOPOS servo drive.
6) Valid in the following conditions: Mains input voltage 400 VAC, nominal switching frequency, 40 °C ambient temperature, installation altitudes <500 m above sea level.
7) Value for the nominal switching frequency.
8) If necessary, the stress of the motor isolation system be reduced by an additional externally-wired dU/dt choke. For example, the RWK 305 three-phase dU/dt choke from Schaffner (www.schaffner.com) can be used. IMPORTANT: Even when using a dU/dt choke, it is necessary to ensure that an EMC-compatible, low inductance shield connection is used!
9) The module's electrical output frequency (SCTRL_SPEED_ACT * MOTOR_POLEPAIRS) is monitored to protect against dual-use in accordance with EC 428/2009 | 3A225. If the electrical output frequency of the module exceeds the limit value of 598 Hz uninterrupted for more than 0.5 s, then the current motion is aborted and error 6060 is output (Power element: Limit speed exceeded).
10) The module's electrical output frequency (SCTRL_SPEED_ACT * MOTOR_POLEPAIRS) is monitored to protect against dual use in accordance with EC 428/2009 | 3A225. If the electrical output frequency of the module exceeds the limit value of 598 Hz uninterrupted for more than 0.5 s, then the current movement is aborted and error 6060 is output (power unit: limit speed exceeded).
11) OSSD (Open Signal Switching Device) signals are used to monitor signal lines for short circuits and cross faults.
12) Continuous operation of ACOPOS servo drives at altitudes ranging from 500 m to 2000 m above sea level is possible (taking the continuous current reductions listed into consideration). Requirements that go above and beyond this need to be arranged with B&R.
13) Continuous operation of ACOPOS servo drives at ambient temperatures ranging from 40 °C to max. 55 °C is possible (taking the continuous current reductions listed into consideration), but results in a shorter lifespan.



Provided by Industrial Automation Co. • www.industrialautomationco.com • Parts & Repair: 877-727-8757

## 2.4.3 ACOPOS 1090

### 2.4.3.1 Order data

| Model number | Short description | Figure |
|---|---|---|
| | **Servo drives** |  |
| 8V1090.00-2 | ACOPOS servo drive, 3x 400-480 V, 8.8 A, 4 kW, line filter, integrated braking resistor and electronic secure restart inhibit | |
| 8V1090.001-2 | ACOPOS servo drive, 3x 400-480 V, 8.8 A, 4 kW, coated, line filter, integrated braking resistor and electronic secure restart inhibit | |
| | **Optional accessories** | |
| | **Plug-in modules** | |
| 8AC110.60-2 | ACOPOS plug-in module, CAN interface | |
| 8AC110.60-3 | ACOPOS plug-in module, CAN interface | |
| 8AC114.60-2 | ACOPOS plug-in module, POWERLINK V2 interface | |
| 8AC120.60-1 | ACOPOS plug-in module, EnDat encoder and sine incremental encoder interface | |
| 8AC121.60-1 | ACOPOS plug-in module, HIPERFACE interface | |
| 8AC122.60-3 | ACOPOS plug-in module, resolver interface 10 kHz | |
| 8AC122.60-4 | ACOPOS plug-in module, resolver interface 10 kHz, no open line detection | |
| 8AC123.60-1 | ACOPOS plug-in module, incremental encoder and SSI absolute encoder interface | |
| 8AC125.60-1 | ACOPOS plug-in module, BiSS/SSI SinCos/SSI interface | |
| 8AC125.60-2 | ACOPOS plug-in module, BiSS encoder interface 5 V, baud rate 6.25 Mbit/s | |
| 8AC125.61-2 | ACOPOS plug-in module, BiSS encoder interface 12 V, baud rate 6.25 Mbit/s | |
| 8AC126.60-1 | ACOPOS plug-in module, EnDat 2.2 encoder interface | |
| 8AC130.60-1 | ACOPOS plug-in module, 8 digital I/O configurable in pairs as 24 V input or as output 400/100 mA, 2 digital outputs 2 A, order TB712 terminal block separately | |
| 8AC131.60-1 | ACOPOS plug-in module, 2 analog inputs ±10 V, 2 digital I/Os configurable as 24 V input or output 45 mA, order terminal block TB712 separately! | |
| 8AC132.60-1 | ACOPOS plug-in module, 2 analog inputs ±10 V | |
| 8AC140.60-3 | ACOPOS plug-in module, CPU, x86 100 MHz Intel compatible, 32 MB DRAM, 32 kB SRAM, removable application memory: CompactFlash, 1 CAN interface, 1 Ethernet interface 100 Base-T, 1 PROFIBUS DP slave interface, 1 RS232 interface, 3 digital I/O points configurable as 24 VDC input or 500 mA output, 1 analog input ±10 V, order program memory and 0TB708 terminal block separately | |
| 8AC140.61-3 | ACOPOS plug-in module, CPU, ARNC0, x86 100 MHz Intel compatible, 32 MB DRAM, 32 kB SRAM, removable application memory: CompactFlash, 1 CAN interface, 1 Ethernet interface 100 Base-T, 1 PROFIBUS DP slave interface, 1 RS232 interface, 3 digital I/O points configurable as 24 VDC input or 500 mA output, 1 analog input ±10 V, order program memory and 0TB708 terminal block separately | |
| 8AC141.60-2 | ACOPOS plug-in module, CPU, x86 100 MHz Intel compatible, 16 MB DRAM, 32 kB SRAM, removable application memory: CompactFlash, 2 CAN interfaces, 1 Ethernet interface 100 Base-T, 1 RS232 interface, 1 X2X Link Master interface, 3 digital I/O points configurable as 24 VDC input or 500 mA output, 1 analog input ±10 V, order program memory and 0TB704 and 0TB708 terminal blocks separately | |
| 8AC141.61-3 | ACOPOS plug-in module, CPU, ARNC0, x86 100 MHz Intel compatible, 32 MB DRAM, 32 kB SRAM, removable application memory: CompactFlash, 2 CAN interfaces, 1 Ethernet interface 100 Base-T, 1 RS232 interface, 1 X2X Link Master interface, 3 digital I/O points configurable as 24 VDC input or 500 mA output, 1 analog input ±10 V, order program memory and 0TB704 and 0TB708 terminal blocks separately | |
| | **Shielding component sets** | |
| 8X0010.00-1 | ACOPOS shielding components set for 8V1022.xxx-x up to 8V1090.xxx-x | |
| | **Terminal sets** | |
| 8X0001.00-1 | ACOPOS accessories, plug set for 8V1010.00 and 8V1090.00 (3 phase) | |

Table 30: 8V1090.00-2, 8V1090.001-2 - Order data

### 2.4.3.2 Technical data

| Model number | 8V1090.00-2 | 8V1090.001-2 |
|---|---|---|
| **General information** | | |
| Note | - | Variant with partially coated circuit boards |
| B&R ID code | 0x12C8 | 0xA09B |
| Slots for plug-in modules | 4 | |
| Certification | | |
| CE | Yes | |
| cULus | Yes | |
| KC | Yes | |
| FSC | Yes | |
| **Power mains connection** | | |
| Permissible power mains forms | TT, TN [1] | |
| Mains input voltage | 3x 400 VAC to 480 VAC ±10% | |
| Frequency | 50 / 60 Hz ±4% | |
| Installed load | Max. 10 kVA | |
| Starting current at 400 VAC | 7 A | |
| Switch-on interval | >10 s | |
| Integrated line filter in accordance with EN 61800-3, Category C3 [2] | Yes | |
| Power loss at max. device power without braking resistor | Approx. 200 W | |
| **DC bus connection** | | |
| DC bus capacitance | 470 µF | |
| **24 VDC supply** | | |
| Input voltage [3] | 24 VDC ±25% | |
| Input capacitance | 8200 µF | |
| Power consumption [4] | Max. 2.5 A + current for motor holding brake | |
| **Motor connection** | | |
| Quantity | 1 | |
| Continuous current [5] | 8.8 $A_{eff}$ | |
| Reduction of continuous current depending on the ambient temperature | | |
| Mains input voltage: 400 VAC | | |
| Switching frequency 5 kHz | No reduction | |
| Switching frequency 10 kHz | 0.18 $A_{eff}$ per °C (starting at 54°C) [6] | |
| Switching frequency 20 kHz | 0.18 $A_{eff}$ per °C (starting at 30°C) | |
| Mains input voltage: 480 VAC | | |
| Switching frequency 5 kHz | No reduction | |
| Switching frequency 10 kHz | 0.18 $A_{eff}$ per °C (starting at 48°C) [6] | |
| Switching frequency 20 kHz | 0.18 $A_{eff}$ per °C (starting at 18°C) | |
| Reduction of continuous current depending on the installation elevation | | |
| Starting at 500 m above sea level | 0.88 $A_{eff}$ per 1000 m | |
| Peak current | 24 $A_{eff}$ | |
| Nominal switching frequency | 10 kHz | |
| Possible switching frequencies | 5 / 10 / 20 kHz | |
| Electrical stress of the connected motor in accordance with IEC TS 60034-25 [7] | Limit value curve A | |
| Max. motor line length | 25 m | |
| Protective measures | | |
| Overload protection | Yes | |
| Short circuit and ground fault protection | Yes | |
| Max. output frequency | 598 Hz [8] | 598 Hz [9] |
| **Motor holding brake connection** | | |
| Response threshold for open line monitoring | Approx. 385 mA | |
| Max. output current | 1 A | |
| Max. number of switching cycles | Unlimited since handled electronically | |
| **Braking resistors** | | |
| Peak power output | 7 kW | |
| Continuous power | 200 W | |
| **Limit switch and reference inputs** | | |
| Quantity | 3 | |
| Wiring | Sink | |
| Electrical isolation | | |
| Input - ACOPOS | Yes | |
| Input - Input | No | |
| Input voltage | | |
| Nominal | 24 VDC | |
| Maximum | 30 VDC | |
| Switching threshold | | |
| Low | <5 V | <5 V |
| High | >15 V | >15 V |

Table 31: 8V1090.00-2, 8V1090.001-2 - Technical data



Provided by Industrial Automation Co. • www.industrialautomationco.com • Parts & Repair: 877-727-8757

| Model number | 8V1090.00-2 | 8V1090.001-2 |
|---|---|---|
| Input current at nominal voltage | Approx. 4 mA | |
| Switching delay | Max. 2.0 ms | |
| Modulation compared to ground potential | Max. ±38 V | |
| **Enable inputs** | | |
| Quantity | 1 | |
| Wiring | Sink | |
| Electrical isolation | | |
| Input - ACOPOS | Yes | |
| Input voltage | | |
| Nominal | 24 VDC | |
| Maximum | 30 VDC | |
| Input current at nominal voltage | Approx. 30 mA | |
| Switching threshold | | |
| Low | <5 V | <5 V |
| High | >15 V | >15 V |
| Switching delay | | |
| Enable 0 -> 1, ready for PWM | Max. 100 µs | |
| Enable 1 -> 0, PWM off | Max. 2.0 ms | |
| Modulation compared to ground potential | Max. ±38 V | |
| OSSD signal connections [10)] | Not permitted | |
| **Trigger inputs** | | |
| Quantity | 2 | |
| Wiring | Sink | |
| Electrical isolation | | |
| Input - ACOPOS | Yes | |
| Input - Input | No | |
| Input voltage | | |
| Nominal | 24 VDC | |
| Maximum | 30 VDC | |
| Switching threshold | | |
| Low | <5 V | <5 V |
| High | >15 V | >15 V |
| Input current at nominal voltage | Approx. 10 mA | |
| Switching delay | | |
| Positive edge | 52 µs ±0.5 µs (digitally filtered) | |
| Negative edge | 53 µs ±0.5 µs (digitally filtered) | |
| Modulation compared to ground potential | Max. ±38 V | |
| **Electrical characteristics** | | |
| Discharge capacitance | 660 nF | |
| **Operating conditions** | | |
| Permitted mounting orientations | | |
| Hanging vertically | Yes | |
| Lying horizontally | Yes | |
| Standing horizontally | No | |
| Installation at elevations above sea level | | |
| Nominal | 0 to 500 m | |
| Maximum [11)] | 2000 m | |
| Degree of pollution in accordance with EN 60664-1 | 2 (non-conductive pollution) | |
| Overvoltage category in accordance with IEC 60364-4-443:1999 | II | |
| EN 60529 protection | IP20 | |
| **Environmental conditions** | | |
| Temperature | | |
| Operation | | |
| Nominal | 5 to 40°C | |
| Maximum [12)] | 55°C | |
| Storage | -25 to 55°C | |
| Transport | -25 to 70°C | |
| Relative humidity | | |
| Operation | 5 to 85% | |
| Storage | 5 to 95% | |
| Transport | Max. 95% at 40°C | |
| **Mechanical characteristics** | | |
| Dimensions | | |
| Width | 70.5 mm | |
| Height | 375 mm | |
| Depth | 235.5 mm | |
| Weight | 4.4 kg | |

Table 31: 8V1090.00-2, 8V1090.001-2 - Technical data

1) In the USA, TT and TN power mains are commonly referred to as "Delta/Wye with grounded Wye neutral".
2) Limit values from EN 61800-3 C3 (second environment).
3) The permissible input voltage range is reduced when using motor holding brakes. The input voltage range should be selected so that the proper supply voltage for the motor holding brake can be maintained.
4) The current requirements depend on the configuration of the ACOPOS servo drive.



Provided by Industrial Automation Co. • www.industrialautomationco.com • Parts & Repair: 877-727-8757

5) Valid in the following conditions: 400 VAC mains input voltage, nominal switching frequency, 40°C ambient temperature, installation altitude <500 m above sea level.
6) Value for the nominal switching frequency.
7) If necessary, the stress of the motor isolation system be reduced by an additional externally-wired dU/dt choke. For example, the RWK 305 three-phase dU/dt choke from Schaffner (www.schaffner.com) can be used. IMPORTANT: Even when using a dU/dt choke, it is necessary to ensure that an EMC-compatible, low inductance shield connection is used!
8) The module's electrical output frequency (SCTRL_SPEED_ACT * MOTOR_POLEPAIRS) is monitored to protect against dual use in accordance with EC 428/2009 | 3A225. If the electrical output frequency of the module exceeds the limit value of 598 Hz uninterrupted for more than 0.5 s, then the current movement is aborted and error 6060 is output (Power element: Limit speed exceeded).
9) The module's electrical output frequency (SCTRL_SPEED_ACT * MOTOR_POLEPAIRS) is monitored to protect against dual use in accordance with EC 428/2009 | 3A225. If the electrical output frequency of the module exceeds the limit value of 598 Hz uninterrupted for more than 0.5 s, then the current movement is aborted and error 6060 is output (power unit: limit speed exceeded).
10) OSSD (open signal switching device) signals are used to monitor signal lines for short circuits and cross faults.
11) Continuous operation of ACOPOS servo drives at altitudes ranging from 500 m to 2000 m above sea level is possible (taking the specified continuous current reductions into consideration). Requirements that go above and beyond this need to be arranged with B&R.
12) Continuous operation of ACOPOS servo drives at ambient temperatures ranging from 40°C to max. 55°C is possible (taking the specified continuous current reductions into consideration), but this will result in a shorter service life.

## 2.4.4 Wiring

### Pinout overview

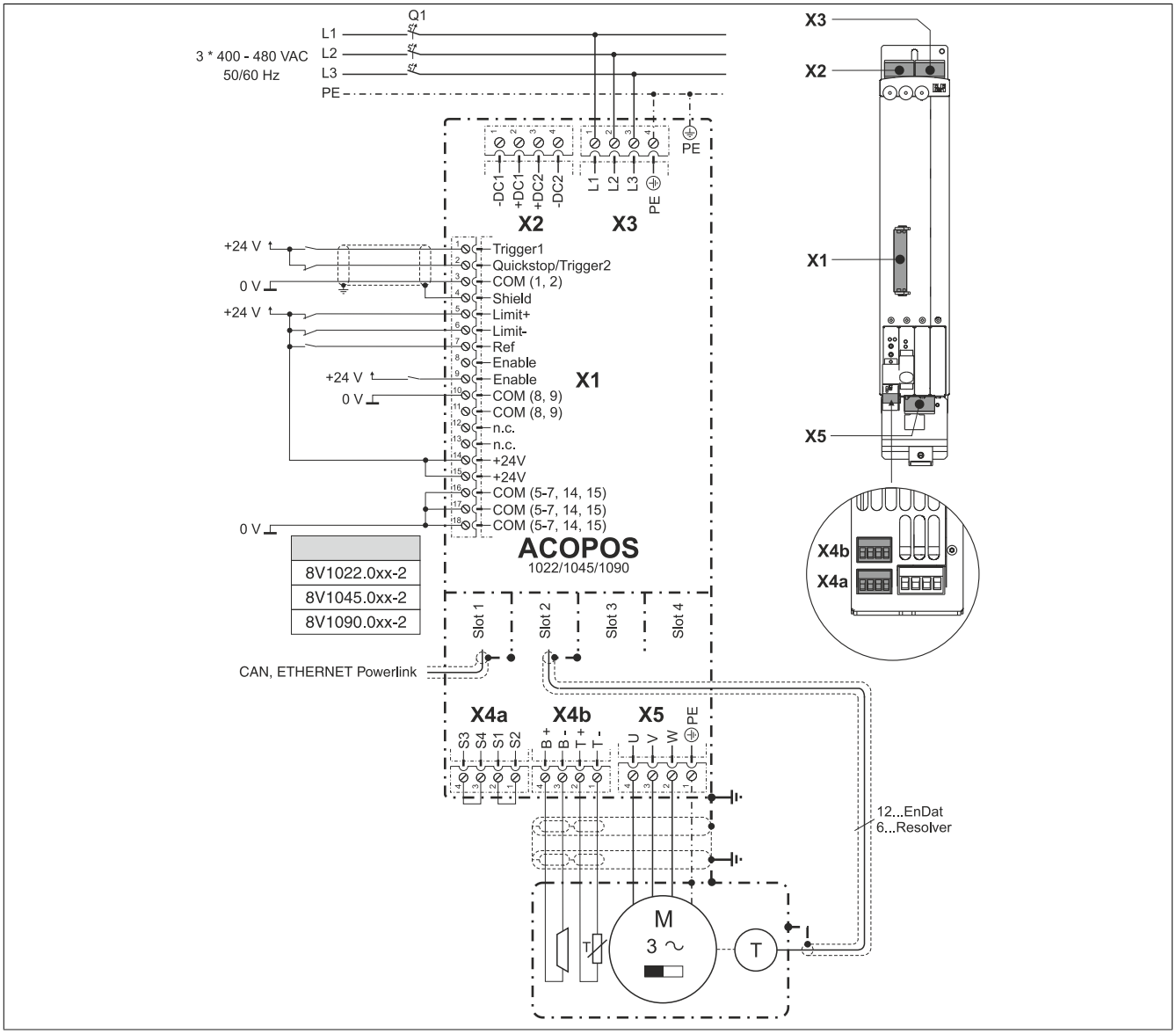


Figure 18: ACOPOS 1022, 1045, 1090 - Pinout overview

### 2.4.4.1 X1 - Pinout

| X1 | Pin | Name | Function |
|---|---|---|---|
| 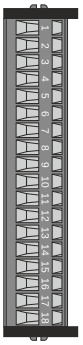 | 1 | Trigger1 | Trigger 1 |
| | 2 | Quickstop/Trigger2 | Quickstop/Trigger2 |
| | 3 | COM (1, 2) | Trigger 1, Quickstop/Trigger 2 0 V |
| | 4 | Shield | Shield |
| | 5 | Limit+ | Positive HW limit |
| | 6 | Limit- | Negative HW limit |
| | 7 | Ref | Reference switch |
| | 8 | Enable [1)] | Enable |
| | 9 | Enable [1)] | Enable |
| | 10 | COM (8, 9) | Enable 0 V |
| | 11 | COM (8, 9) | Enable 0 V |
| | 12 | --- | --- |
| | 13 | --- | --- |
| | 14 | +24 V | +24 V supply |
| | 15 | +24 V | +24 V supply |
| | 16 | COM (5-7, 14, 15) | 0 V supply |
| | 17 | COM (5-7, 14, 15) | 0 V supply |
| | 18 | COM (5-7, 14, 15) | 0 V supply |
| | The following connections are linked with each other internally in the device:<br>• Pin 8 --> Pin 9 (Enable)<br>• Pin 10 --> Pin 11 (Enable 0 V)<br>• Pin 14 --> Pin 15 (Supply +24 V)<br>• Pin 16 --> Pin 17 --> Pin 18 (Supply 0 V)<br><br>Terminal cross sections see "Overview of clampable cross sections" on page 266 | | |

Table 32: X1 - Pinout

1) The wiring is not permitted to exceed a total length of 30 m.

## Information:

**To obtain a defined reference of ground to ground potential, B&R recommends grounding the COM connections (5-7, 14, 15) on connector X1.**

### 2.4.4.2 X2 - Pinout

| X2 | Pin | Name | Function |
|---|---|---|---|
| 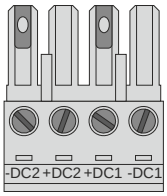 | 1 | -DC1 | U DC bus - |
| | 2 | +DC1 | U DC bus + |
| | 3 | +DC2 | U DC bus + |
| | 4 | -DC2 | U DC bus - |
| | Terminal cross sections see "Overview of clampable cross sections" on page 266 | | |

Table 33: X2 - Pinout



Provided by Industrial Automation Co. • www.industrialautomationco.com • Parts & Repair: 877-727-8757

### 2.4.4.3 X3 - Pinout

## Danger!

**Servo drives are not permitted to be operated directly on IT power systems and corner-grounded TN-S power systems with protective ground conductor!**

| X3 | Pin | Name | Function |
|---|---|---|---|
| 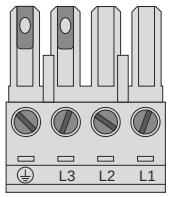 | 1 | L1 | Power mains connection L1 |
| | 2 | L2 | Power mains connection L2 |
| | 3 | L3 | Power mains connection L3 |
| | 4 | PE | Protective ground conductor |
| | Terminal cross sections see "Overview of clampable cross sections" on page 266 | | |

Table 34: X3 - Pinout

### 2.4.4.4 X4a, X4b - Pinout

| X4a | Pin | Description | Function |
|---|---|---|---|
| 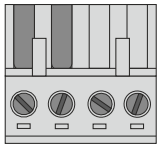 | 1 | S2 [1] | Enabling, power supply of external holding brake (+) |
| | 2 | S1 [1] | Enabling of external holding brake (+) |
| | 3 | S4 | Enabling, power supply of external holding brake (-) |
| | 4 | S3 | Enabling of external holding brake (-) |
| | Terminal cross section see "Overview of clampable cross sections" on page 266 | | |

Table 35: X4a - Pinout

1) If the holding brake is connected via an additional external relay contact (ground-in e.g. via connections S1/S2) instead of only via the internal transistor, then the internal quenching circuit has no effect! In this case, the customer must make sure that neither the relay contact nor the braking coil are damaged when switching off the brake. This can be done by interconnecting the coil or - better still - interconnecting the contact with a quenching circuit.

| X4b | Pin | Description | Function |
|---|---|---|---|
| 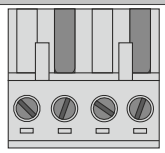 | 1 | T- | Temperature sensor - |
| | 2 | T+ | Temperature sensor + |
| | 3 | B- [1] | Brake - |
| | 4 | B+ [1] | Brake + |
| | Terminal cross section see "Overview of clampable cross sections" on page 266 | | |

Table 36: X4b - Pinout

1) If the holding brake is connected via an additional external relay contact (ground-in e.g. via connections S1/S2) instead of only via the internal transistor, then the internal quenching circuit has no effect! In this case, the customer must make sure that neither the relay contact nor the braking coil are damaged when switching off the brake. This can be done by interconnecting the coil or - better still - interconnecting the contact with a quenching circuit.

## Danger!

**The connections for the motor temperature sensors and the motor holding brake are safely isolated circuits. These connections are therefore only permitted to be connected to devices or components that have sufficient isolation per IEC 60364-4-41 or EN 61800-5-1.**

## Caution!

**If B+ and B- are swapped when connecting the permanent magnet holding brakes, then the brakes cannot be opened! ACOPOS servo drives cannot determine if a holding brake is connected with reverse polarity!**



Provided by Industrial Automation Co. • www.industrialautomationco.com • Parts & Repair: 877-727-8757

### 2.4.4.4.1 Wiring the connections for the motor holding brake

The power supply, enabling and monitoring of the output for the motor holding brake can be carried out in three different ways via the wiring of connector X4a:

| | Figure | Description |
|---|---|---|
| 1 | 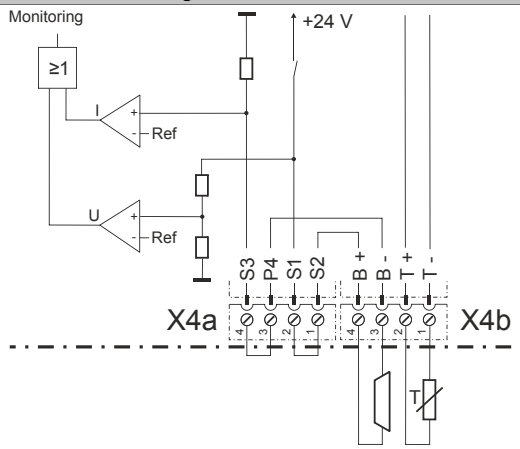 | • **Power supply:** Internal via the ACOPOS servo drive<br>• **Enabling:** Internal via the ACOPOS servo drive<br>• **Monitoring:** Internal via the ACOPOS servo drive<br>Jumpers must be placed between connections S1 and S2 as well as S3 and S4 on connector X4a. [1] |
| 2 | 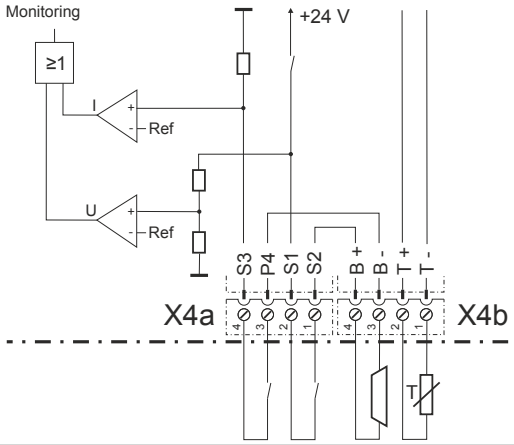 | • **Power supply:** Internal via the ACOPOS servo drive<br>• **Enabling:** Possible internally by the ACOPOS servo drive and externally by dry contacts [2]<br>• **Monitoring:** Internal via the ACOPOS servo drive<br>**Information:**<br>**ACOPOS-internal monitoring must be configured according to the requirements of the application.** [3] |
| 3 | 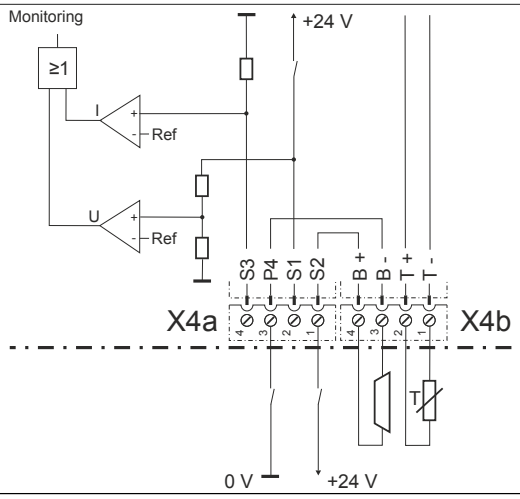 | • **Power supply:** External<br>• **Enabling:** External<br>• **Monitoring:** External<br>**Information:**<br>**ACOPOS-internal monitoring cannot be used here; it must therefore be disabled using software.** [4] |

Table 37: Enabling the external holding brake

1) The two jumpers are already wired on connector X4a supplied with ACOPOS servo drives.
2) External dry contacts can be connected between S1 and S2 and between S3 and S4. This makes it possible to enable the holding brake via external safety circuits independently of the control integrated in the ACOPOS servo drive.
3) Configuration takes place using ParID 90 (1 ... Internal monitoring active, 5 ... Internal monitoring not active).
4) Disabling takes place using ParID 90 (5 ... Internal monitoring not active).



Provided by Industrial Automation Co. • www.industrialautomationco.com • Parts & Repair: 877-727-8757

### 2.4.4.5 X5 - Pinout

| X5 | Pin | Name | Function |
|---|---|---|---|
| 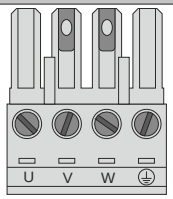 | 1 | PE | Protective ground conductor |
| | 2 | W | Motor connection W |
| | 3 | V | Motor connection V |
| | 4 | U | Motor connection U |
| | Terminal cross sections see "Overview of clampable cross sections" on page 266 | | |

Table 38: X5 - Pinout

### 2.4.4.6 Additional protective ground connection (PE)

The protective ground conductor is connected to the M5 threaded bolt provided using a cable lug.

For information about dimensioning, see "Protective ground connection (PE)" on page 222.

| Figure | Pin | Name | Function |
|---|---|---|---|
| 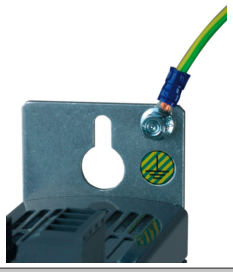 | --- | PE | Protective ground conductor |
| **Terminal cross sections** | **[mm²]** | | **AWG** |
| Cable lug for M5 threaded bolt | 0.25 - 16 | | 23 - 5 |

Table 39: Protective ground connection (PE) - ACOPOS

## Danger!

**Before turning on the servo drive, make sure that the housing is properly connected to ground (PE rail). The ground connection must be established even when testing the drive or operating it for a short time!**



Provided by Industrial Automation Co. • www.industrialautomationco.com • Parts & Repair: 877-727-8757

### 2.4.4.7 Input/Output circuit diagram

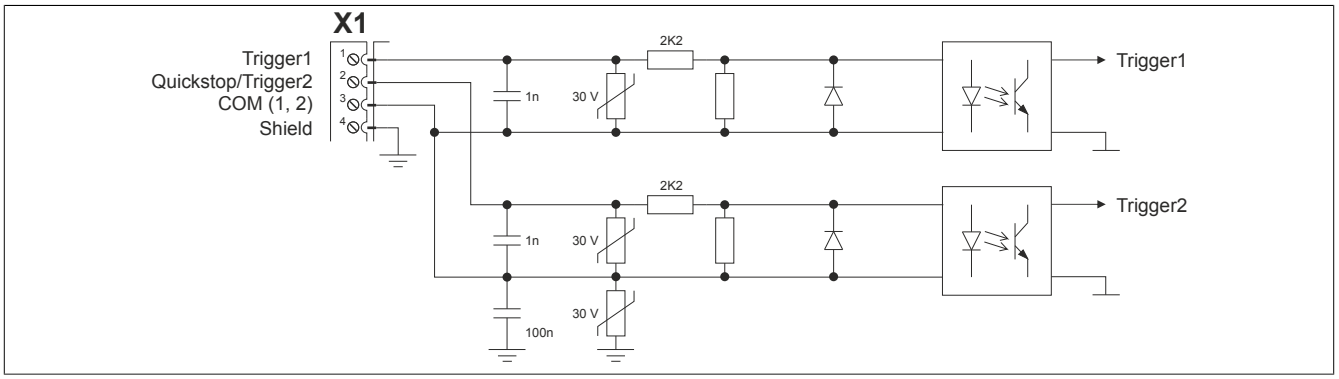


Figure 19: Trigger

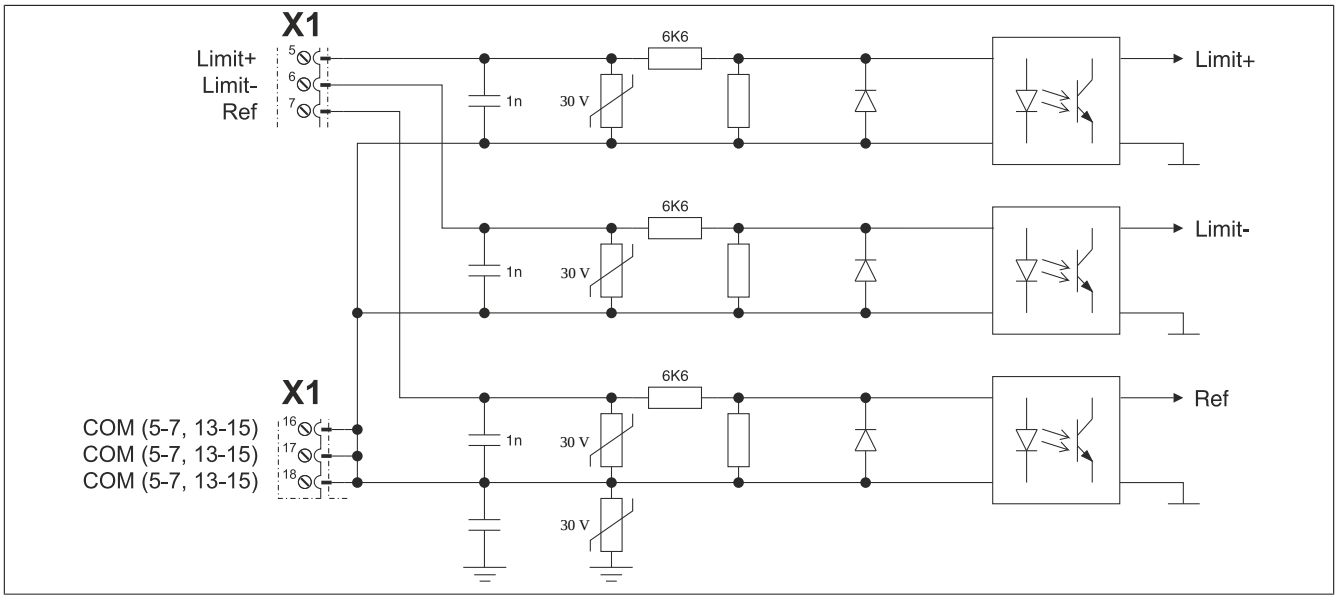


Figure 20: Limit

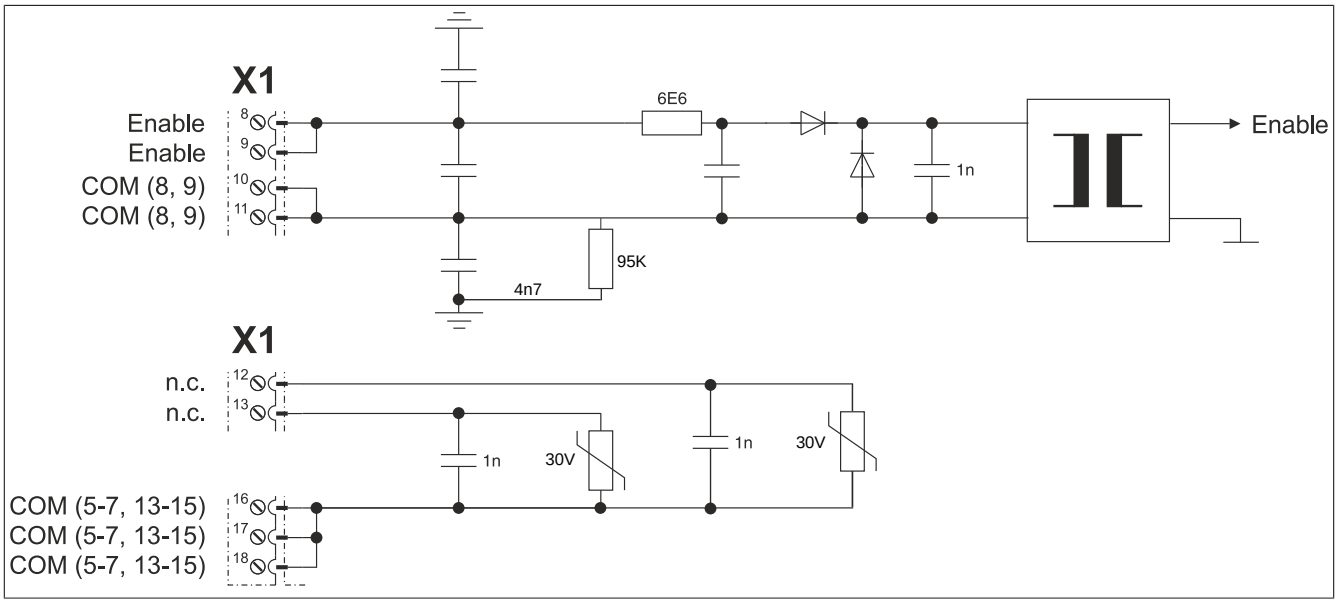


Figure 21: Enable



Provided by Industrial Automation Co. • www.industrialautomationco.com • Parts & Repair: 877-727-8757

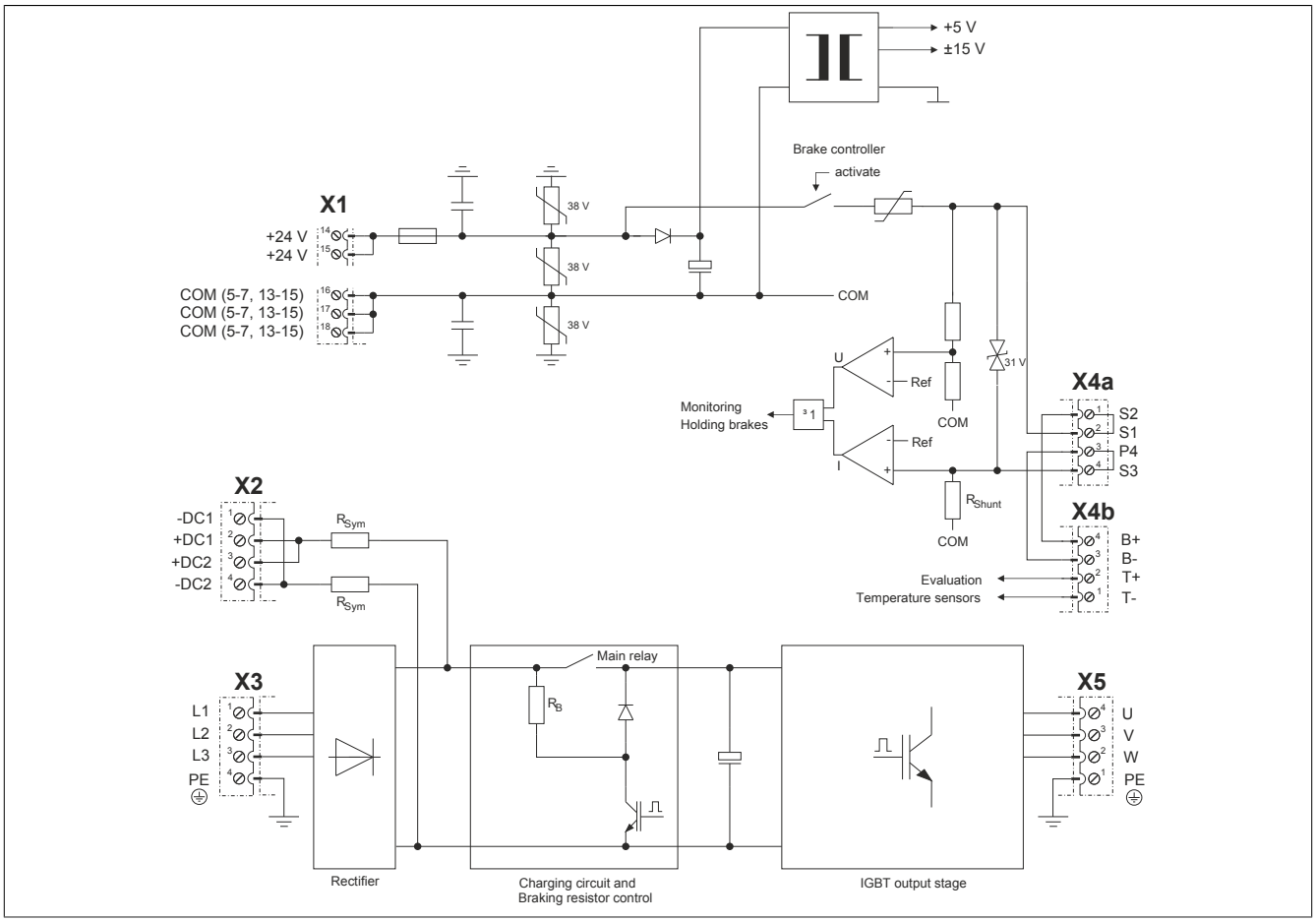


Figure 22: ACOPOS 1022, 1045, 1090 - Input/Output circuit diagram



Provided by Industrial Automation Co. • www.industrialautomationco.com • Parts & Repair: 877-727-8757

## 2.5 ACOPOS 1180, 1320

### 2.5.1 ACOPOS 1180

#### 2.5.1.1 Order data

| Model number | Short description | Figure |
|---|---|---|
| | **Servo drives** |  |
| 8V1180.00-2 | ACOPOS servo drive, 3x 400-480 V, 19 A, 9 kW, line filter, braking resistor, DC bus power supply and electronic secure restart inhibit integrated | |
| 8V1180.001-2 | ACOPOS servo drive, 3x 400-480 V, 19 A, 9 kW, coated, line filter, integrated braking resistor, DC bus power supply and electronic secure restart inhibit | |
| | **Optional accessories** | |
| | **Braking resistors** | |
| 8B0W0045H000.000-1 | Braking resistor, 450 W, 50 R, IP20, terminals | |
| 8B0W0045H000.001-1 | Braking resistor, 450 W, 50 R, IP65, terminals | |
| 8B0W0079H000.000-1 | Braking resistor, 790 W, 33 R, IP20, terminals | |
| 8B0W0079H000.001-1 | Braking resistor, 790 W, 33 R, IP65, terminals | |
| | **Plug-in modules** | |
| 8AC110.60-2 | ACOPOS plug-in module, CAN interface | |
| 8AC110.60-3 | ACOPOS plug-in module, CAN interface | |
| 8AC114.60-2 | ACOPOS plug-in module, POWERLINK V2 interface | |
| 8AC120.60-1 | ACOPOS plug-in module, EnDat encoder and sine incremental encoder interface | |
| 8AC121.60-1 | ACOPOS plug-in module, HIPERFACE interface | |
| 8AC122.60-3 | ACOPOS plug-in module, resolver interface 10 kHz | |
| 8AC122.60-4 | ACOPOS plug-in module, resolver interface 10 kHz, no open line detection | |
| 8AC123.60-1 | ACOPOS plug-in module, incremental encoder and SSI absolute encoder interface | |
| 8AC125.60-1 | ACOPOS plug-in module, BiSS/SSI SinCos/SSI interface | |
| 8AC125.60-2 | ACOPOS plug-in module, BiSS encoder interface 5 V, baud rate 6.25 Mbit/s | |
| 8AC125.61-2 | ACOPOS plug-in module, BiSS encoder interface 12 V, baud rate 6.25 Mbit/s | |
| 8AC126.60-1 | ACOPOS plug-in module, EnDat 2.2 encoder interface | |
| 8AC130.60-1 | ACOPOS plug-in module, 8 digital I/O configurable in pairs as 24 V input or as output 400/100 mA, 2 digital outputs 2 A, order TB712 terminal block separately | |
| 8AC131.60-1 | ACOPOS plug-in module, 2 analog inputs ±10 V, 2 digital I/Os configurable as 24 V input or output 45 mA, order terminal block TB712 separately! | |
| 8AC132.60-1 | ACOPOS plug-in module, 2 analog inputs ±10 V | |
| 8AC140.60-3 | ACOPOS plug-in module, CPU, x86 100 MHz Intel compatible, 32 MB DRAM, 32 kB SRAM, removable application memory: CompactFlash, 1 CAN interface, 1 Ethernet interface 100 Base-T, 1 PROFIBUS DP slave interface, 1 RS232 interface, 3 digital I/O points configurable as 24 VDC input or 500 mA output, 1 analog input ±10 V, order program memory and 0TB708 terminal block separately | |
| 8AC140.61-3 | ACOPOS plug-in module, CPU, ARNC0, x86 100 MHz Intel compatible, 32 MB DRAM, 32 kB SRAM, removable application memory: CompactFlash, 1 CAN interface, 1 Ethernet interface 100 Base-T, 1 PROFIBUS DP slave interface, 1 RS232 interface, 3 digital I/O points configurable as 24 VDC input or 500 mA output, 1 analog input ±10 V, order program memory and 0TB708 terminal block separately | |
| 8AC141.60-2 | ACOPOS plug-in module, CPU, x86 100 MHz Intel compatible, 16 MB DRAM, 32 kB SRAM, removable application memory: CompactFlash, 2 CAN interfaces, 1 Ethernet interface 100 Base-T, 1 RS232 interface, 1 X2X Link Master interface, 3 digital I/O points configurable as 24 VDC input or 500 mA output, 1 analog input ±10 V, order program memory and 0TB704 and 0TB708 terminal blocks separately | |
| 8AC141.61-3 | ACOPOS plug-in module, CPU, ARNC0, x86 100 MHz Intel compatible, 32 MB DRAM, 32 kB SRAM, removable application memory: CompactFlash, 2 CAN interfaces, 1 Ethernet interface 100 Base-T, 1 RS232 interface, 1 X2X Link Master interface, 3 digital I/O points configurable as 24 VDC input or 500 mA output, 1 analog input ±10 V, order program memory and 0TB704 and 0TB708 terminal blocks separately | |
| | **Shielding component sets** | |
| 8X0020.00-1 | ACOPOS shielding components set for 8V1180.xxx-x and 8V1320.xxx-x | |
| | **Terminal sets** | |
| 8X0002.00-1 | ACOPOS accessories, plug set for 8V1180.00 and 8V1320.00 (3 phase) | |

Table 40: 8V1180.00-2, 8V1180.001-2 - Order data

### 2.5.1.2 Technical data

| Model number | 8V1180.00-2 | 8V1180.001-2 |
|---|---|---|
| **General information** | | |
| Note | - | Variant with partially coated circuit boards |
| B&R ID code | 0x1282 | 0xA000 |
| Slots for plug-in modules | 4 | |
| Certification | | |
| CE | Yes | |
| cULus | Yes | |
| KC | Yes | |
| FSC | Yes | |
| **Power mains connection** | | |
| Permissible power mains forms | TT, TN [1] | TT, TN [2] |
| Mains input voltage | 3x 400 VAC to 480 VAC ±10% | |
| Frequency | 50 / 60 Hz ±4% | |
| Installed load | Max. 17 kVA | |
| Starting current at 400 VAC | 13 A | |
| Switch-on interval | >10 s | |
| Integrated line filter in accordance with EN 61800-3, Category C3 [3] | Yes | |
| Power loss at max. device power without braking resistor | Approx. 500 W | |
| **DC bus connection** | | |
| DC bus capacitance | 940 µF | |
| **24 VDC supply** | | |
| Input voltage | 24 VDC +25% / -20% | |
| Input capacitance | 40,000 µF | |
| Current requirements at 24 VDC [4] | | |
| Mains input voltage applied | - [5] | - [6] |
| Mains input voltage not applied | Max. 2.8 A + current for the motor holding brake + current on the 24 VDC output | |
| DC bus power supply | | |
| Switch-on voltage | 455 VDC | |
| **24 VDC output** | | |
| Output voltage | | |
| Mains input voltage applied | 22 to 24 VDC | |
| Mains input voltage not applied | 16.7 to 30 VDC [7] | 16.7 to 30 VDC [8] |
| Output current | Max. 0.5 A | |
| **Motor connection** | | |
| Quantity | 1 | |
| Continuous current [9] | 19 $A_{eff}$ | 19 $A_{eff}$ |
| Reduction of continuous current depending on the ambient temperature | | |
| Mains input voltage: 400 VAC | | |
| Switching frequency 5 kHz | No reduction | |
| Switching frequency 10 kHz | No reduction [10] | |
| Switching frequency 20 kHz | No reduction | |
| Mains input voltage: 480 VAC | | |
| Switching frequency 5 kHz | No reduction | |
| Switching frequency 10 kHz | No reduction [10] | |
| Switching frequency 20 kHz | No reduction | |
| Reduction of continuous current depending on the installation elevation | | |
| Starting at 500 m above sea level | 1.9 $A_{eff}$ per 1000 m | |
| Peak current | 50 $A_{eff}$ | 50 $A_{eff}$ |
| Nominal switching frequency | 10 kHz | |
| Possible switching frequencies | 5 / 10 / 20 kHz | |
| Electrical stress of the connected motor in accordance with IEC TS 60034-25 [11] | Limit value curve A | |
| Max. motor line length | 25 m | |
| Protective measures | | |
| Overload protection | Yes | |
| Short circuit and ground fault protection | Yes | |
| Max. output frequency | 598 Hz [12] | 598 Hz [13] |
| **Motor holding brake connection** | | |
| Response threshold for open line monitoring | Approx. 250 mA | |
| Max. output current | 1.5 A | |
| Max. number of switching cycles | Unlimited since done electronically | Unlimited since handled electronically |
| **Braking resistors** | | |
| Peak power int. / ext. | 14 / 40 kW | |
| Continuous power int. / ext. | 0.4 / 8 kW [14] | 0.4 / 8 kW [15] |
| Minimum braking resistance (ext.) | 15 Ω | |
| Rated current of the built-in fuse | 12 A (fast-acting) | |

Table 41: 8V1180.00-2, 8V1180.001-2 - Technical data



Provided by Industrial Automation Co. • www.industrialautomationco.com • Parts & Repair: 877-727-8757

| Model number | 8V1180.00-2 | 8V1180.001-2 |
|---|---|---|
| **Limit switch and reference inputs** | | |
| Quantity | 3 | |
| Wiring | Sink | |
| Electrical isolation | | |
| Input - ACOPOS | Yes | |
| Input - Input | No | |
| Input voltage | | |
| Nominal | 24 VDC | |
| Maximum | 30 VDC | |
| Switching threshold | | |
| Low | <5 V | |
| High | >15 V | |
| Input current at nominal voltage | Approx. 4 mA | |
| Switching delay | Max. 2.0 ms | |
| Modulation compared to ground potential | Max. ±38 V | |
| **Enable inputs** | | |
| Quantity | 1 | |
| Wiring | Sink | |
| Electrical isolation | | |
| Input - ACOPOS | Yes | |
| Input voltage | | |
| Nominal | 24 VDC | |
| Maximum | 30 VDC | |
| Input current at nominal voltage | Approx. 30 mA | |
| Switching threshold | | |
| Low | <5 V | |
| High | >15 V | |
| Switching delay | | |
| Enable 0 -> 1, ready for PWM | Max. 100 µs | |
| Enable 1 -> 0, PWM off | Max. 2.0 ms | |
| Modulation compared to ground potential | Max. ±38 V | |
| OSSD signal connections [16)] | Not permitted | |
| **Trigger inputs** | | |
| Quantity | 2 | |
| Wiring | Sink | |
| Electrical isolation | | |
| Input - ACOPOS | Yes | |
| Input - Input | No | |
| Input voltage | | |
| Nominal | 24 VDC | |
| Maximum | 30 VDC | |
| Switching threshold | | |
| Low | <5 V | |
| High | >15 V | |
| Input current at nominal voltage | Approx. 10 mA | |
| Switching delay | | |
| Positive edge | 52 µs ±0.5 µs (digitally filtered) | |
| Negative edge | 53 µs ±0.5 µs (digitally filtered) | |
| Modulation compared to ground potential | Max. ±38 V | |
| **Electrical characteristics** | | |
| Discharge capacitance | 3.1 µF | |
| **Operating conditions** | | |
| Permitted mounting orientations | | |
| Hanging vertically | Yes | |
| Lying horizontally | Yes | |
| Standing horizontally | No | |
| Installation at elevations above sea level | | |
| Nominal | 0 to 500 m | |
| Maximum [17)] | 2000 m | |
| Degree of pollution in accordance with EN 60664-1 | 2 (non-conductive pollution) | |
| Overvoltage category in accordance with IEC 60364-4-443:1999 | II | |
| EN 60529 protection | IP20 | |
| **Environmental conditions** | | |
| Temperature | | |
| Operation | | |
| Nominal | 5 to 40°C | |
| Maximum [18)] | 55°C | |
| Storage | -25 to 55°C | |
| Transport | -25 to 70°C | |

Table 41: 8V1180.00-2, 8V1180.001-2 - Technical data



Provided by Industrial Automation Co. • www.industrialautomationco.com • Parts & Repair: 877-727-8757

| Model number | 8V1180.00-2 | 8V1180.001-2 |
|---|---|---|
| Relative humidity | | |
| Operation | 5 to 85% | |
| Storage | 5 to 95% | |
| Transport | Max. 95% at 40°C | |
| **Mechanical characteristics** | | |
| Dimensions | | |
| Width | 200 mm | |
| Height | 375 mm | |
| Depth | 234 mm | |
| Weight | 10.1 kg | |

Table 41: 8V1180.00-2, 8V1180.001-2 - Technical data

1) In the USA, the terms "Delta / Wye with Grounded Wye neutral" are common for TT and TN power mains.
2) In the USA, TT and TN power mains are commonly referred to as "Delta/Wye with grounded Wye neutral".
3) Limit values from EN 61800-3 C3 (second environment).
4) The current requirements depend on the configuration of the ACOPOS servo drive.
5) If the mains input voltage (3x 400 VAC to 480 VAC ±10%) is applied, the 24 VDC supply voltage for the ACOPOS servo drive is created by the internal DC bus power supply, which reduces the 24 VDC current requirements ($I_{24VDC}$) to 0.
6) If the mains input voltage (3x 400 VAC to 480 VAC ±10%) is applied, then the 24 VDC supply voltage for the ACOPOS servo drive is generated by the internal DC bus power supply, reducing the 24 VDC current consumption ($I_{24\ VDC}$) to 0.
7) If the mains input voltage (3x 400 VAC to 480 VAC ±10%) is not applied, the voltage is created at the 24 VDC output from the ACOPOS servo drive's 24 VDC supply voltage; in this case it is between the maximum allowable and the minimum allowable (reduced by max. 2.5 V) 24 VDC supply voltage of the ACOPOS servo drive.
8) If the mains input voltage (3x 400 VAC to 480 VAC ±10%) is not applied, the voltage is generated at the 24 VDC output from the ACOPOS servo drive's 24 VDC supply voltage; in this case, it is between the maximum permissible and minimum permissible (reduced by max. 2.5 V) 24 VDC supply voltage of the ACOPOS servo drive.
9) Valid in the following conditions: Mains input voltage 400 VAC, nominal switching frequency, 40 °C ambient temperature, installation altitudes <500 m above sea level.
10) Value for the nominal switching frequency.
11) If necessary, the stress of the motor isolation system be reduced by an additional externally-wired dU/dt choke. For example, the RWK 305 three-phase dU/dt choke from Schaffner (www.schaffner.com) can be used. IMPORTANT: Even when using a dU/dt choke, it is necessary to ensure that an EMC-compatible, low inductance shield connection is used!
12) The module's electrical output frequency (SCTRL_SPEED_ACT * MOTOR_POLEPAIRS) is monitored to protect against dual-use in accordance with EC 428/2009 | 3A225. If the electrical output frequency of the module exceeds the limit value of 598 Hz uninterrupted for more than 0.5 s, then the current motion is aborted and error 6060 is output (Power element: Limit speed exceeded).
13) The module's electrical output frequency (SCTRL_SPEED_ACT * MOTOR_POLEPAIRS) is monitored to protect against dual use in accordance with EC 428/2009 | 3A225. If the electrical output frequency of the module exceeds the limit value of 598 Hz uninterrupted for more than 0.5 s, then the current movement is aborted and error 6060 is output (power unit: limit speed exceeded).
14) Continuous power refers to the maximum braking power the ACOPOS servo driver can yield continuously. Depending on the application, the actual continuous power provided by the external braking resistor is limited by the rated current of fuse $I_B$ (integrated in the ACOPOS servo drive), and the value of the external braking resistance $R_{BR}$.
15) Continuous power refers to the maximum braking power the ACOPOS servo drive can exchange continuously. Depending on the application, the actual continuous power provided by the external braking resistor is limited by the rated current of fuse $I_B$ (integrated in the ACOPOS servo drive), and the value of the external braking resistance $R_{BR}$.
16) OSSD (Open Signal Switching Device) signals are used to monitor signal lines for short circuits and cross faults.
17) Continuous operation of ACOPOS servo drives at altitudes ranging from 500 m to 2000 m above sea level is possible (taking the continuous current reductions listed into consideration). Requirements that go above and beyond this need to be arranged with B&R.
18) Continuous operation of ACOPOS servo drives at ambient temperatures ranging from 40 °C to max. 55 °C is possible (taking the continuous current reductions listed into consideration), but results in a shorter lifespan.



Provided by Industrial Automation Co. • www.industrialautomationco.com • Parts & Repair: 877-727-8757

## 2.5.2 ACOPOS 1320

### 2.5.2.1 Order data

| Model number | Short description | Figure |
|---|---|---|
| | **Servo drives** |  |
| 8V1320.00-2 | ACOPOS servo drive, 3x 400-480 V, 34 A, 16 kW, line filter, braking resistor, DC bus power supply and electronic secure restart inhibit integrated | |
| 8V1320.001-2 | ACOPOS servo drive, 3x 400-480 V, 34 A, 16 kW, coated, line filter, integrated braking resistor, DC bus power supply and electronic secure restart inhibit | |
| | **Optional accessories** | |
| | **Braking resistors** | |
| 8B0W0045H000.000-1 | Braking resistor, 450 W, 50 R, IP20, terminals | |
| 8B0W0045H000.001-1 | Braking resistor, 450 W, 50 R, IP65, terminals | |
| 8B0W0079H000.000-1 | Braking resistor, 790 W, 33 R, IP20, terminals | |
| 8B0W0079H000.001-1 | Braking resistor, 790 W, 33 R, IP65, terminals | |
| | **Plug-in modules** | |
| 8AC110.60-2 | ACOPOS plug-in module, CAN interface | |
| 8AC110.60-3 | ACOPOS plug-in module, CAN interface | |
| 8AC114.60-2 | ACOPOS plug-in module, POWERLINK V2 interface | |
| 8AC120.60-1 | ACOPOS plug-in module, EnDat encoder and sine incremental encoder interface | |
| 8AC121.60-1 | ACOPOS plug-in module, HIPERFACE interface | |
| 8AC122.60-3 | ACOPOS plug-in module, resolver interface 10 kHz | |
| 8AC122.60-4 | ACOPOS plug-in module, resolver interface 10 kHz, no open line detection | |
| 8AC123.60-1 | ACOPOS plug-in module, incremental encoder and SSI absolute encoder interface | |
| 8AC125.60-1 | ACOPOS plug-in module, BiSS/SSI SinCos/SSI interface | |
| 8AC125.60-2 | ACOPOS plug-in module, BiSS encoder interface 5 V, baud rate 6.25 Mbit/s | |
| 8AC125.61-2 | ACOPOS plug-in module, BiSS encoder interface 12 V, baud rate 6.25 Mbit/s | |
| 8AC126.60-1 | ACOPOS plug-in module, EnDat 2.2 encoder interface | |
| 8AC130.60-1 | ACOPOS plug-in module, 8 digital I/O configurable in pairs as 24 V input or as output 400/100 mA, 2 digital outputs 2 A, order TB712 terminal block separately | |
| 8AC131.60-1 | ACOPOS plug-in module, 2 analog inputs ±10 V, 2 digital I/Os configurable as 24 V input or output 45 mA, order terminal block TB712 separately! | |
| 8AC132.60-1 | ACOPOS plug-in module, 2 analog inputs ±10 V | |
| 8AC140.60-3 | ACOPOS plug-in module, CPU, x86 100 MHz Intel compatible, 32 MB DRAM, 32 kB SRAM, removable application memory: CompactFlash, 1 CAN interface, 1 Ethernet interface 100 Base-T, 1 PROFIBUS DP slave interface, 1 RS232 interface, 3 digital I/O points configurable as 24 VDC input or 500 mA output, 1 analog input ±10 V, order program memory and 0TB708 terminal block separately | |
| 8AC140.61-3 | ACOPOS plug-in module, CPU, ARNC0, x86 100 MHz Intel compatible, 32 MB DRAM, 32 kB SRAM, removable application memory: CompactFlash, 1 CAN interface, 1 Ethernet interface 100 Base-T, 1 PROFIBUS DP slave interface, 1 RS232 interface, 3 digital I/O points configurable as 24 VDC input or 500 mA output, 1 analog input ±10 V, order program memory and 0TB708 terminal block separately | |
| 8AC141.60-2 | ACOPOS plug-in module, CPU, x86 100 MHz Intel compatible, 16 MB DRAM, 32 kB SRAM, removable application memory: CompactFlash, 2 CAN interfaces, 1 Ethernet interface 100 Base-T, 1 RS232 interface, 1 X2X Link Master interface, 3 digital I/O points configurable as 24 VDC input or 500 mA output, 1 analog input ±10 V, order program memory and 0TB704 and 0TB708 terminal blocks separately | |
| 8AC141.61-3 | ACOPOS plug-in module, CPU, ARNC0, x86 100 MHz Intel compatible, 32 MB DRAM, 32 kB SRAM, removable application memory: CompactFlash, 2 CAN interfaces, 1 Ethernet interface 100 Base-T, 1 RS232 interface, 1 X2X Link Master interface, 3 digital I/O points configurable as 24 VDC input or 500 mA output, 1 analog input ±10 V, order program memory and 0TB704 and 0TB708 terminal blocks separately | |
| | **Shielding component sets** | |
| 8X0020.00-1 | ACOPOS shielding components set for 8V1180.xxx-x and 8V1320.xxx-x | |
| | **Terminal sets** | |
| 8X0002.00-1 | ACOPOS accessories, plug set for 8V1180.00 and 8V1320.00 (3 phase) | |

Table 42: 8V1320.00-2, 8V1320.001-2 - Order data

### 2.5.2.2 Technical data

| Model number | 8V1320.00-2 | 8V1320.001-2 |
|---|---|---|
| **General information** | | |
| Note | - | Variant with partially coated circuit boards |
| B&R ID code | 0x1283 | 0xA001 |
| Slots for plug-in modules | 4 | |
| Certification | | |
| CE | Yes | |
| cULus | Yes | |
| KC | Yes | |
| FSC | Yes | |
| **Power mains connection** | | |
| Permissible power mains forms | TT, TN [1] | TT, TN [2] |
| Mains input voltage | 3x 400 VAC to 480 VAC ±10% | |
| Frequency | 50 / 60 Hz ±4% | |
| Installed load | Max. 30 kVA | |
| Starting current at 400 VAC | 13 A | |
| Switch-on interval | >10 s | |
| Integrated line filter in accordance with EN 61800-3, Category C3 [3] | Yes | |
| Power loss at max. device power without braking resistor | Approx. 800 W | |
| **DC bus connection** | | |
| DC bus capacitance | 1645 µF | |
| **24 VDC supply** | | |
| Input voltage | 24 VDC +25% / -20% | |
| Input capacitance | 40,000 µF | |
| Current requirements at 24 VDC [4] | | |
| Mains input voltage applied | - [5] | - [6] |
| Mains input voltage not applied | Max. 2.8 A + current for the motor holding brake + current on the 24 VDC output | |
| DC bus power supply | | |
| Switch-on voltage | 455 VDC | |
| **24 VDC output** | | |
| Output voltage | | |
| Mains input voltage applied | 22 to 24 VDC | |
| Mains input voltage not applied | 16.7 to 30 VDC [7] | 16.7 to 30 VDC [8] |
| Output current | Max. 0.5 A | |
| **Motor connection** | | |
| Quantity | 1 | |
| Continuous current [9] | 34 $A_{eff}$ | |
| Reduction of continuous current depending on the ambient temperature | | |
| Mains input voltage: 400 VAC | | |
| Switching frequency 5 kHz | No reduction | |
| Switching frequency 10 kHz | No reduction [10] | |
| Switching frequency 20 kHz | 0.61 $A_{eff}$ per °C (starting at 40°C) | |
| Mains input voltage: 480 VAC | | |
| Switching frequency 5 kHz | No reduction | |
| Switching frequency 10 kHz | No reduction [10] | |
| Switching frequency 20 kHz | 0.61 $A_{eff}$ per °C (starting at 25°C) | |
| Reduction of continuous current depending on the installation elevation | | |
| Starting at 500 m above sea level | 3.4 $A_{eff}$ per 1000 m | |
| Peak current | 80 $A_{eff}$ | |
| Nominal switching frequency | 10 kHz | |
| Possible switching frequencies | 5 / 10 / 20 kHz | |
| Electrical stress of the connected motor in accordance with IEC TS 60034-25 [11] | Limit value curve A | |
| Max. motor line length | 25 m | |
| Protective measures | | |
| Overload protection | Yes | |
| Short circuit and ground fault protection | Yes | |
| Max. output frequency | 598 Hz [12] | 598 Hz [13] |
| **Motor holding brake connection** | | |
| Response threshold for open line monitoring | Approx. 250 mA | |
| Max. output current | 1.5 A | |
| Max. number of switching cycles | Unlimited since done electronically | Unlimited since handled electronically |
| **Braking resistors** | | |
| Peak power int. / ext. | 14 / 40 kW | |
| Continuous power int. / ext. | 0.4 / 8 kW [14] | 0.4 / 8 kW [15] |
| Minimum braking resistance (ext.) | 15 Ω | |
| Rated current of the built-in fuse | 12 A (fast-acting) | |

Table 43: 8V1320.00-2, 8V1320.001-2 - Technical data



Provided by Industrial Automation Co. • www.industrialautomationco.com • Parts & Repair: 877-727-8757

| Model number | 8V1320.00-2 | 8V1320.001-2 |
|---|---|---|
| **Limit switch and reference inputs** | | |
| Quantity | 3 | |
| Wiring | Sink | |
| Electrical isolation | | |
| Input - ACOPOS | Yes | |
| Input - Input | No | |
| Input voltage | | |
| Nominal | 24 VDC | |
| Maximum | 30 VDC | |
| Switching threshold | | |
| Low | <5 V | |
| High | >15 V | |
| Input current at nominal voltage | Approx. 4 mA | |
| Switching delay | Max. 2.0 ms | |
| Modulation compared to ground potential | Max. ±38 V | |
| **Enable inputs** | | |
| Quantity | 1 | |
| Wiring | Sink | |
| Electrical isolation | | |
| Input - ACOPOS | Yes | |
| Input voltage | | |
| Nominal | 24 VDC | |
| Maximum | 30 VDC | |
| Input current at nominal voltage | Approx. 30 mA | |
| Switching threshold | | |
| Low | <5 V | |
| High | >15 V | |
| Switching delay | | |
| Enable 0 -> 1, ready for PWM | Max. 100 µs | |
| Enable 1 -> 0, PWM off | Max. 2.0 ms | |
| Modulation compared to ground potential | Max. ±38 V | |
| OSSD signal connections [16)] | Not permitted | |
| **Trigger inputs** | | |
| Quantity | 2 | |
| Wiring | Sink | |
| Electrical isolation | | |
| Input - ACOPOS | Yes | |
| Input - Input | No | |
| Input voltage | | |
| Nominal | 24 VDC | |
| Maximum | 30 VDC | |
| Switching threshold | | |
| Low | <5 V | |
| High | >15 V | |
| Input current at nominal voltage | Approx. 10 mA | |
| Switching delay | | |
| Positive edge | 52 µs ±0.5 µs (digitally filtered) | |
| Negative edge | 53 µs ±0.5 µs (digitally filtered) | |
| Modulation compared to ground potential | Max. ±38 V | |
| **Electrical characteristics** | | |
| Discharge capacitance | 3.1 µF | |
| **Operating conditions** | | |
| Permitted mounting orientations | | |
| Hanging vertically | Yes | |
| Lying horizontally | Yes | |
| Standing horizontally | No | |
| Installation at elevations above sea level | | |
| Nominal | 0 to 500 m | |
| Maximum [17)] | 2000 m | |
| Degree of pollution in accordance with EN 60664-1 | 2 (non-conductive pollution) | |
| Overvoltage category in accordance with IEC 60364-4-443:1999 | II | |
| EN 60529 protection | IP20 | |
| **Environmental conditions** | | |
| Temperature | | |
| Operation | | |
| Nominal | 5 to 40°C | |
| Maximum [18)] | 55°C | |
| Storage | -25 to 55°C | |
| Transport | -25 to 70°C | |

Table 43: 8V1320.00-2, 8V1320.001-2 - Technical data



Provided by Industrial Automation Co. • www.industrialautomationco.com • Parts & Repair: 877-727-8757

| Model number | 8V1320.00-2 | 8V1320.001-2 |
|---|---|---|
| Relative humidity | | |
| Operation | 5 to 85% | |
| Storage | 5 to 95% | |
| Transport | Max. 95% at 40°C | |
| **Mechanical characteristics** | | |
| Dimensions | | |
| Width | 200 mm | |
| Height | 375 mm | |
| Depth | 234 mm | |
| Weight | 10.6 kg | |

Table 43: 8V1320.00-2, 8V1320.001-2 - Technical data

1) In the USA, the terms "Delta / Wye with Grounded Wye neutral" are common for TT and TN power mains.
2) In the USA, TT and TN power mains are commonly referred to as "Delta/Wye with grounded Wye neutral".
3) Limit values from EN 61800-3 C3 (second environment).
4) The current requirements depend on the configuration of the ACOPOS servo drive.
5) If the mains input voltage (3x 400 VAC to 480 VAC ±10%) is applied, the 24 VDC supply voltage for the ACOPOS servo drive is created by the internal DC bus power supply, which reduces the 24 VDC current requirements ($I_{24VDC}$) to 0.
6) If the mains input voltage (3x 400 VAC to 480 VAC ±10%) is applied, then the 24 VDC supply voltage for the ACOPOS servo drive is generated by the internal DC bus power supply, reducing the 24 VDC current consumption ($I_{24\ VDC}$) to 0.
7) If the mains input voltage (3x 400 VAC to 480 VAC ±10%) is not applied, the voltage is created at the 24 VDC output from the ACOPOS servo drive's 24 VDC supply voltage; in this case it is between the maximum allowable and the minimum allowable (reduced by max. 2.5 V) 24 VDC supply voltage of the ACOPOS servo drive.
8) If the mains input voltage (3x 400 VAC to 480 VAC ±10%) is not applied, the voltage is generated at the 24 VDC output from the ACOPOS servo drive's 24 VDC supply voltage; in this case, it is between the maximum permissible and minimum permissible (reduced by max. 2.5 V) 24 VDC supply voltage of the ACOPOS servo drive.
9) Valid in the following conditions: Mains input voltage 400 VAC, nominal switching frequency, 40 °C ambient temperature, installation altitudes <500 m above sea level.
10) Value for the nominal switching frequency.
11) If necessary, the stress of the motor isolation system be reduced by an additional externally-wired dU/dt choke. For example, the RWK 305 three-phase dU/dt choke from Schaffner (www.schaffner.com) can be used. IMPORTANT: Even when using a dU/dt choke, it is necessary to ensure that an EMC-compatible, low inductance shield connection is used!
12) The module's electrical output frequency (SCTRL_SPEED_ACT * MOTOR_POLEPAIRS) is monitored to protect against dual-use in accordance with EC 428/2009 | 3A225. If the electrical output frequency of the module exceeds the limit value of 598 Hz uninterrupted for more than 0.5 s, then the current motion is aborted and error 6060 is output (Power element: Limit speed exceeded).
13) The module's electrical output frequency (SCTRL_SPEED_ACT * MOTOR_POLEPAIRS) is monitored to protect against dual use in accordance with EC 428/2009 | 3A225. If the electrical output frequency of the module exceeds the limit value of 598 Hz uninterrupted for more than 0.5 s, then the current movement is aborted and error 6060 is output (power unit: limit speed exceeded).
14) Continuous power refers to the maximum braking power the ACOPOS servo driver can yield continuously. Depending on the application, the actual continuous power provided by the external braking resistor is limited by the rated current of fuse $I_B$ (integrated in the ACOPOS servo drive), and the value of the external braking resistance $R_{BR}$.
15) Continuous power refers to the maximum braking power the ACOPOS servo drive can exchange continuously. Depending on the application, the actual continuous power provided by the external braking resistor is limited by the rated current of fuse $I_B$ (integrated in the ACOPOS servo drive), and the value of the external braking resistance $R_{BR}$.
16) OSSD (Open Signal Switching Device) signals are used to monitor signal lines for short circuits and cross faults.
17) Continuous operation of ACOPOS servo drives at altitudes ranging from 500 m to 2000 m above sea level is possible (taking the continuous current reductions listed into consideration). Requirements that go above and beyond this need to be arranged with B&R.
18) Continuous operation of ACOPOS servo drives at ambient temperatures ranging from 40 °C to max. 55 °C is possible (taking the continuous current reductions listed into consideration), but results in a shorter lifespan.



Provided by Industrial Automation Co. • www.industrialautomationco.com • Parts & Repair: 877-727-8757

### 2.5.3 Wiring

#### Pinout overview

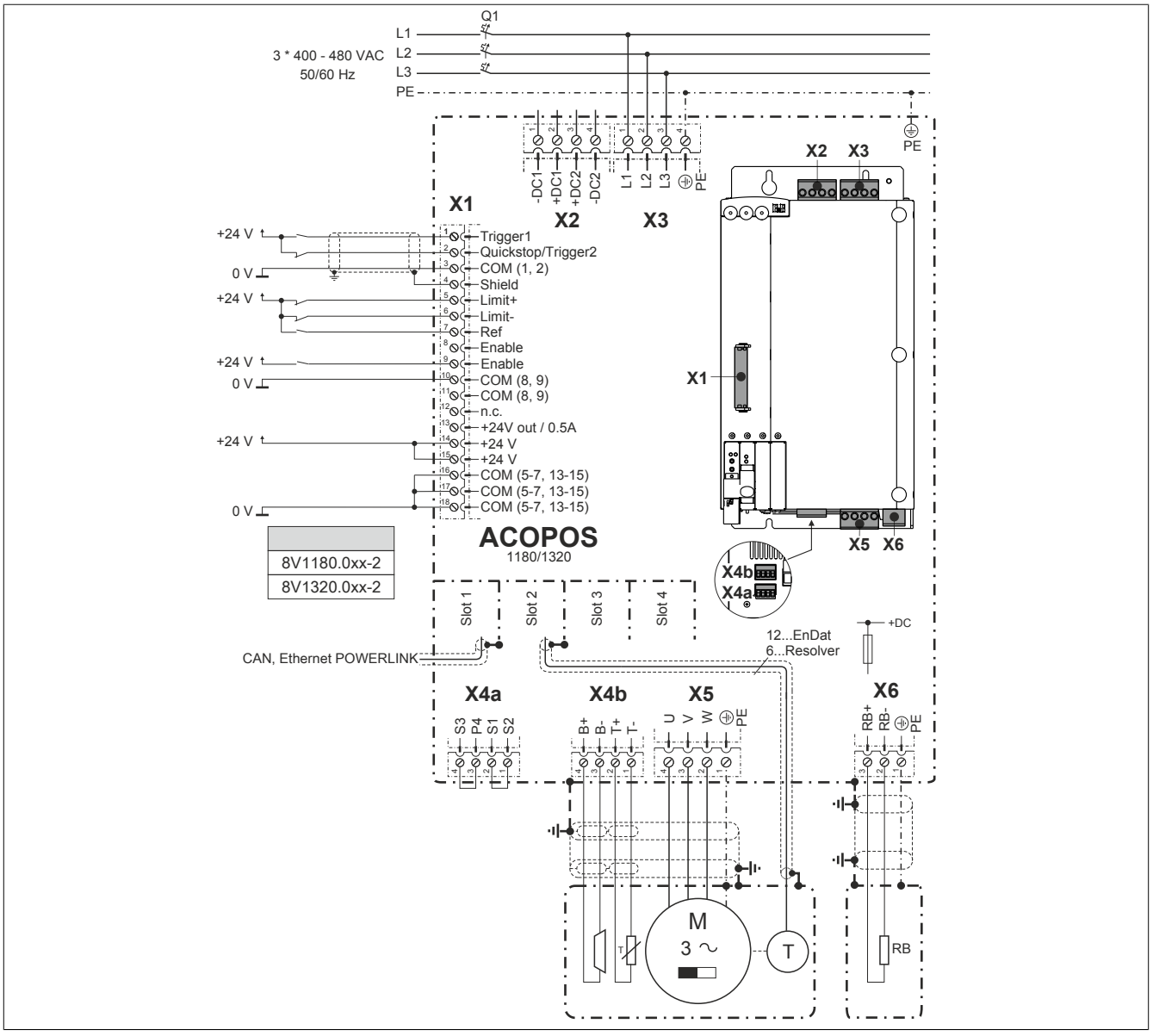


Figure 23: ACOPOS 1180, 1320 - Pinout overview

### 2.5.3.1 X1 - Pinout

| X1 | Pin | Name | Function |
|---|---|---|---|
| 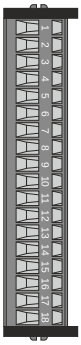 | 1 | Trigger1 | Trigger 1 |
| | 2 | Quickstop/Trigger2 | Quickstop/Trigger2 |
| | 3 | COM (1, 2) | Trigger 1, Quickstop/Trigger 2 0 V |
| | 4 | Shield | Shield |
| | 5 | Limit+ | Positive HW limit |
| | 6 | Limit- | Negative HW limit |
| | 7 | Ref | Reference switch |
| | 8 | Enable [1)] | Enable |
| | 9 | Enable [1)] | Enable |
| | 10 | COM (8, 9) | Enable 0 V |
| | 11 | COM (8, 9) | Enable 0 V |
| | 12 | --- | --- |
| | 13 | +24V out / 0.5A | +24 V output / 0.5 A |
| | 14 | +24 V | +24 V supply |
| | 15 | +24 V | +24 V supply |
| | 16 | COM (5-7, 13-15) | 0 V supply |
| | 17 | COM (5-7, 13-15) | 0 V supply |
| | 18 | COM (5-7, 13-15) | 0 V supply |
| | The following connections are linked with each other internally in the device:<br>• Pin 8 --> Pin 9 (Enable)<br>• Pin 10 --> Pin 11 (Enable 0 V)<br>• Pin 14 --> Pin 15 (Supply +24 V)<br>• Pin 16 --> Pin 17 --> Pin 18 (Supply 0 V)<br>Terminal cross sections see "Overview of clampable cross sections" on page 266 | | |

Table 44: X1 - Pinout

1) The wiring is not permitted to exceed a total length of 30 m.

## Information:

**To obtain a defined reference of ground to ground potential, B&R recommends grounding the COM connections (5-7, 13-15) on connector X1.**

### 2.5.3.2 X2 - Pinout

| X2 | Pin | Name | Function |
|---|---|---|---|
| 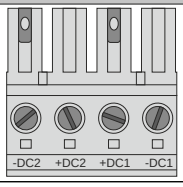 | 1 | -DC1 | U DC bus - |
| | 2 | +DC1 | U DC bus + |
| | 3 | +DC2 | U DC bus + |
| | 4 | -DC2 | U DC bus - |
| | Terminal cross sections see "Overview of clampable cross sections" on page 266 | | |

Table 45: X2 - Pinout

### 2.5.3.3 X3 - Pinout

## Danger!

**Servo drives are not permitted to be operated directly on IT power systems and corner-grounded TN-S power systems with protective ground conductor!**

| X3 | Pin | Name | Function |
|---|---|---|---|
| 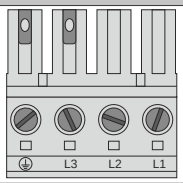 | 1 | L1 | Power mains connection L1 |
| | 2 | L2 | Power mains connection L2 |
| | 3 | L3 | Power mains connection L3 |
| | 4 | PE | Protective ground conductor |
| | Terminal cross sections see "Overview of clampable cross sections" on page 266 | | |

Table 46: X3 - Pinout



Provided by Industrial Automation Co. • www.industrialautomationco.com • Parts & Repair: 877-727-8757

### 2.5.3.4 X4a, X4b - Pinout

| X4a | Pin | Description | Function |
|---|---|---|---|
| 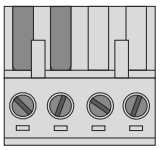 S3 S4 S1 S2 | 1 | S2 [1)] | Enabling, power supply of external holding brake (+) |
| | 2 | S1 [1)] | Enabling of external holding brake (+) |
| | 3 | S4 | Enabling, power supply of external holding brake (-) |
| | 4 | S3 | Enabling of external holding brake (-) |
| | Terminal cross section see "Overview of clampable cross sections" on page 266 | | |

Table 47: X4a - Pinout

1) If the holding brake is connected via an additional external relay contact (ground-in e.g. via connections S1/S2) instead of only via the internal transistor, then the internal quenching circuit has no effect! In this case, the customer must make sure that neither the relay contact nor the braking coil are damaged when switching off the brake. This can be done by interconnecting the coil or - better still - interconnecting the contact with a quenching circuit.

| X4b | Pin | Description | Function |
|---|---|---|---|
| 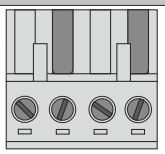 B+ B- T+ T- | 1 | T- | Temperature sensor - |
| | 2 | T+ | Temperature sensor + |
| | 3 | B- [1)] | Brake - |
| | 4 | B+ [1)] | Brake + |
| | Terminal cross section see "Overview of clampable cross sections" on page 266 | | |

Table 48: X4b - Pinout

1) If the holding brake is connected via an additional external relay contact (ground-in e.g. via connections S1/S2) instead of only via the internal transistor, then the internal quenching circuit has no effect! In this case, the customer must make sure that neither the relay contact nor the braking coil are damaged when switching off the brake. This can be done by interconnecting the coil or - better still - interconnecting the contact with a quenching circuit.

## Danger!

**The connections for the motor temperature sensors and the motor holding brake are safely isolated circuits. These connections are therefore only permitted to be connected to devices or components that have sufficient isolation per IEC 60364-4-41 or EN 61800-5-1.**

## Caution!

**If B+ and B- are swapped when connecting the permanent magnet holding brakes, then the brakes cannot be opened! ACOPOS servo drives cannot determine if a holding brake is connected with reverse polarity!**





Provided by Industrial Automation Co. • www.industrialautomationco.com • Parts & Repair: 877-727-8757

### 2.5.3.4.1 Wiring the connections for the motor holding brake

The power supply, enabling and monitoring of the output for the motor holding brake can be carried out in three different ways via the wiring of connector X4a:

| | Figure | Description |
|---|---|---|
| 1 | 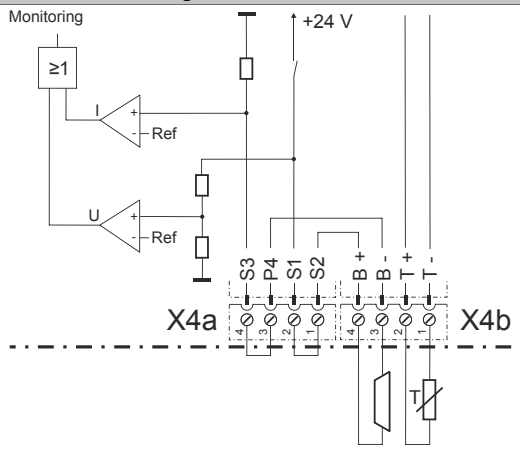 | • **Power supply:** Internal via the ACOPOS servo drive<br>• **Enabling:** Internal via the ACOPOS servo drive<br>• **Monitoring:** Internal via the ACOPOS servo drive<br>Jumpers must be placed between connections S1 and S2 as well as S3 and S4 on connector X4a. [1] |
| 2 | 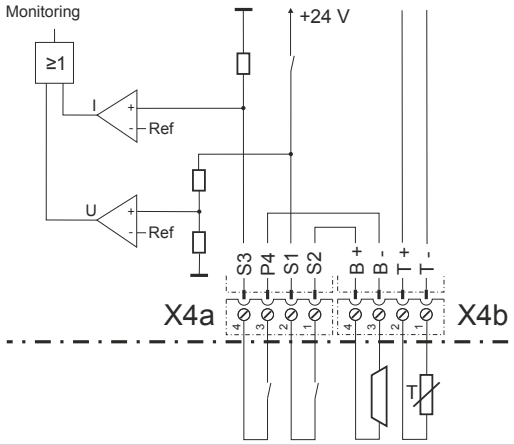 | • **Power supply:** Internal via the ACOPOS servo drive<br>• **Enabling:** Possible internally by the ACOPOS servo drive and externally by dry contacts [2]<br>• **Monitoring:** Internal via the ACOPOS servo drive<br>**Information:**<br>**ACOPOS-internal monitoring must be configured according to the requirements of the application.** [3] |
| 3 | 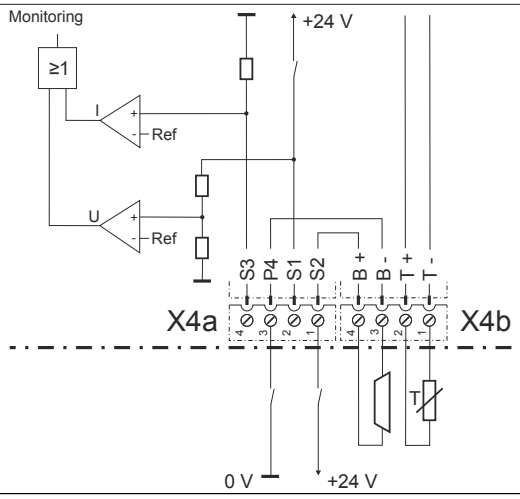 | • **Power supply:** External<br>• **Enabling:** External<br>• **Monitoring:** External<br>**Information:**<br>**ACOPOS-internal monitoring cannot be used here; it must therefore be disabled using software.** [4] |

Table 49: Enabling the external holding brake

1) The two jumpers are already wired on connector X4a supplied with ACOPOS servo drives.
2) External dry contacts can be connected between S1 and S2 and between S3 and S4. This makes it possible to enable the holding brake via external safety circuits independently of the control integrated in the ACOPOS servo drive.
3) Configuration takes place using ParID 90 (1 ... Internal monitoring active, 5 ... Internal monitoring not active).
4) Disabling takes place using ParID 90 (5 ... Internal monitoring not active).



Provided by Industrial Automation Co. • www.industrialautomationco.com • Parts & Repair: 877-727-8757

### 2.5.3.5 X5 - Pinout

| X5 | Pin | Name | Function |
|---|---|---|---|
| 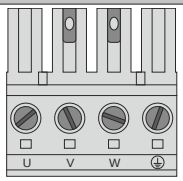 | 1 | PE | Protective ground conductor |
| | 2 | W | Motor connection W |
| | 3 | V | Motor connection V |
| | 4 | U | Motor connection U |
| | Terminal cross sections see "Overview of clampable cross sections" on page 266 | | |

Table 50: X5 - Pinout

### 2.5.3.6 X6 - Pinout

| X6 | Pin | Name | Function |
|---|---|---|---|
| 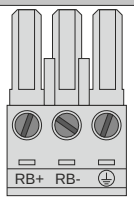 | 1 | PE | Protective ground conductor |
| | 2 | RB- | Braking resistor - |
| | 3 | RB+ | Braking resistor + |
| | Terminal cross sections see "Overview of clampable cross sections" on page 266 | | |

Table 51: X6 - Pinout

### 2.5.3.7 Additional protective ground connection (PE)

The protective ground conductor is connected to the M5 threaded bolt provided using a cable lug.

For information about dimensioning, see "Protective ground connection (PE)" on page 222.

| Figure | Pin | Name | Function |
|---|---|---|---|
|  | --- | PE | Protective ground conductor |
| | | | |
| **Terminal cross sections** | **[mm²]** | | **AWG** |
| Cable lug for M5 threaded bolt | 0.25 - 16 | | 23 - 5 |

Table 52: Protective ground connection (PE) - ACOPOS

## Danger!

**Before turning on the servo drive, make sure that the housing is properly connected to ground (PE rail). The ground connection must be established even when testing the drive or operating it for a short time!**





Provided by Industrial Automation Co. • www.industrialautomationco.com • Parts & Repair: 877-727-8757

### 2.5.3.8 Input/output circuit diagram

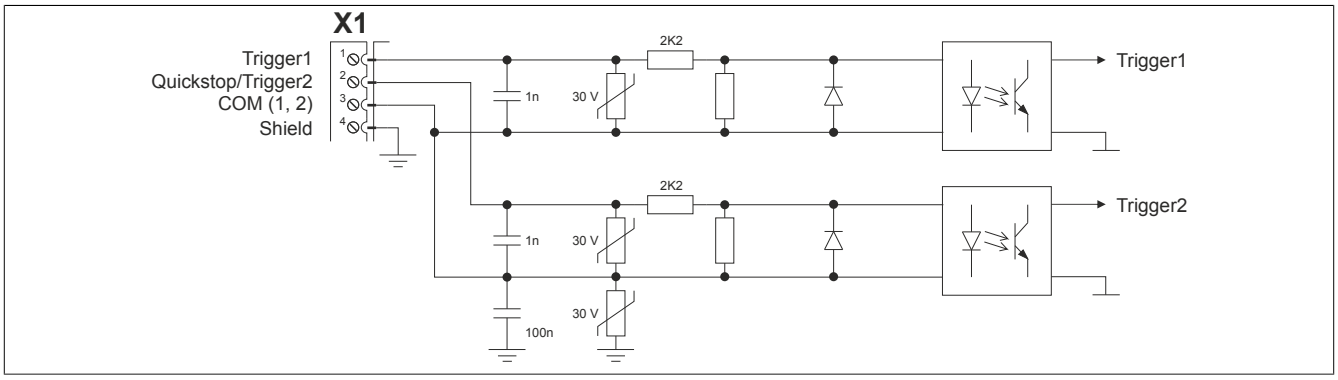


Figure 24: Trigger

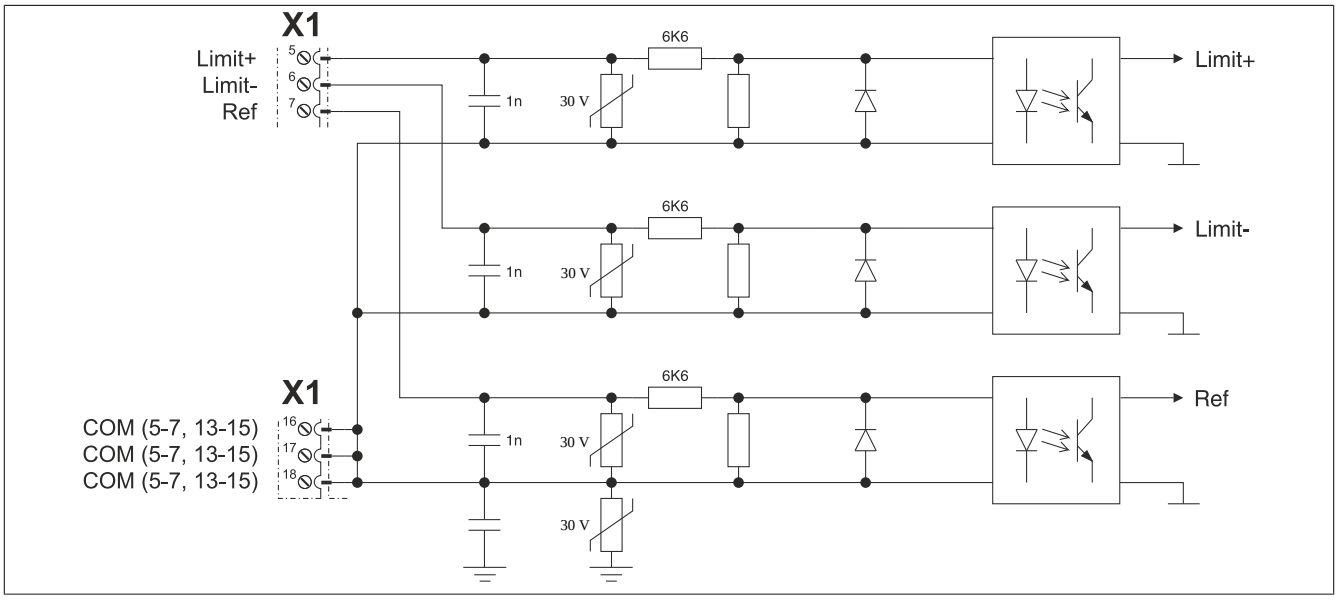


Figure 25: Limit

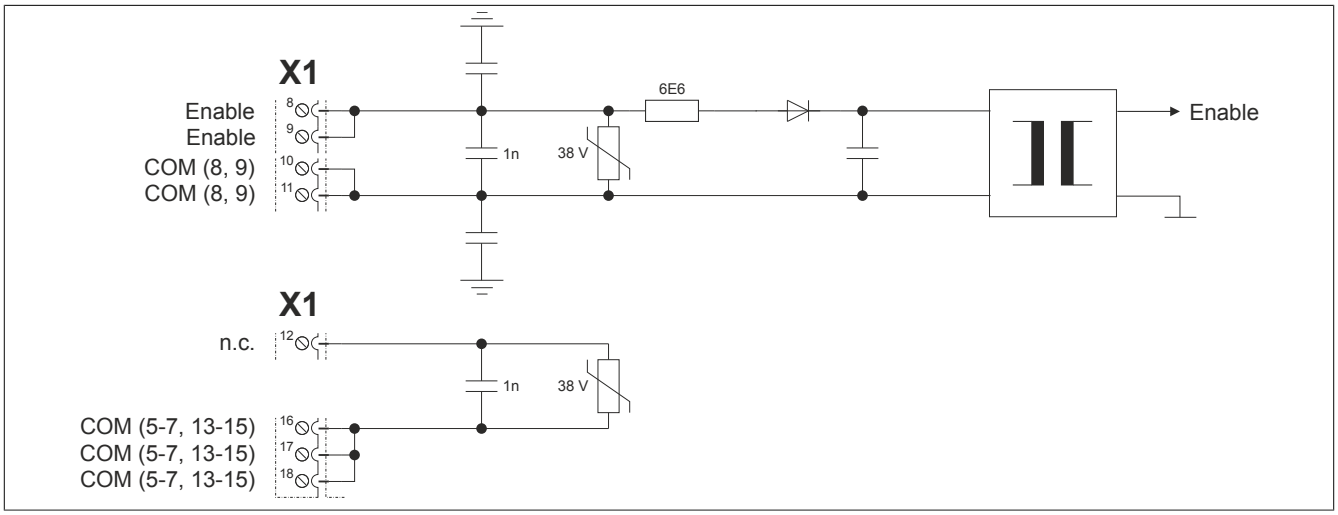


Figure 26: Enable



Provided by Industrial Automation Co. • www.industrialautomationco.com • Parts & Repair: 877-727-8757

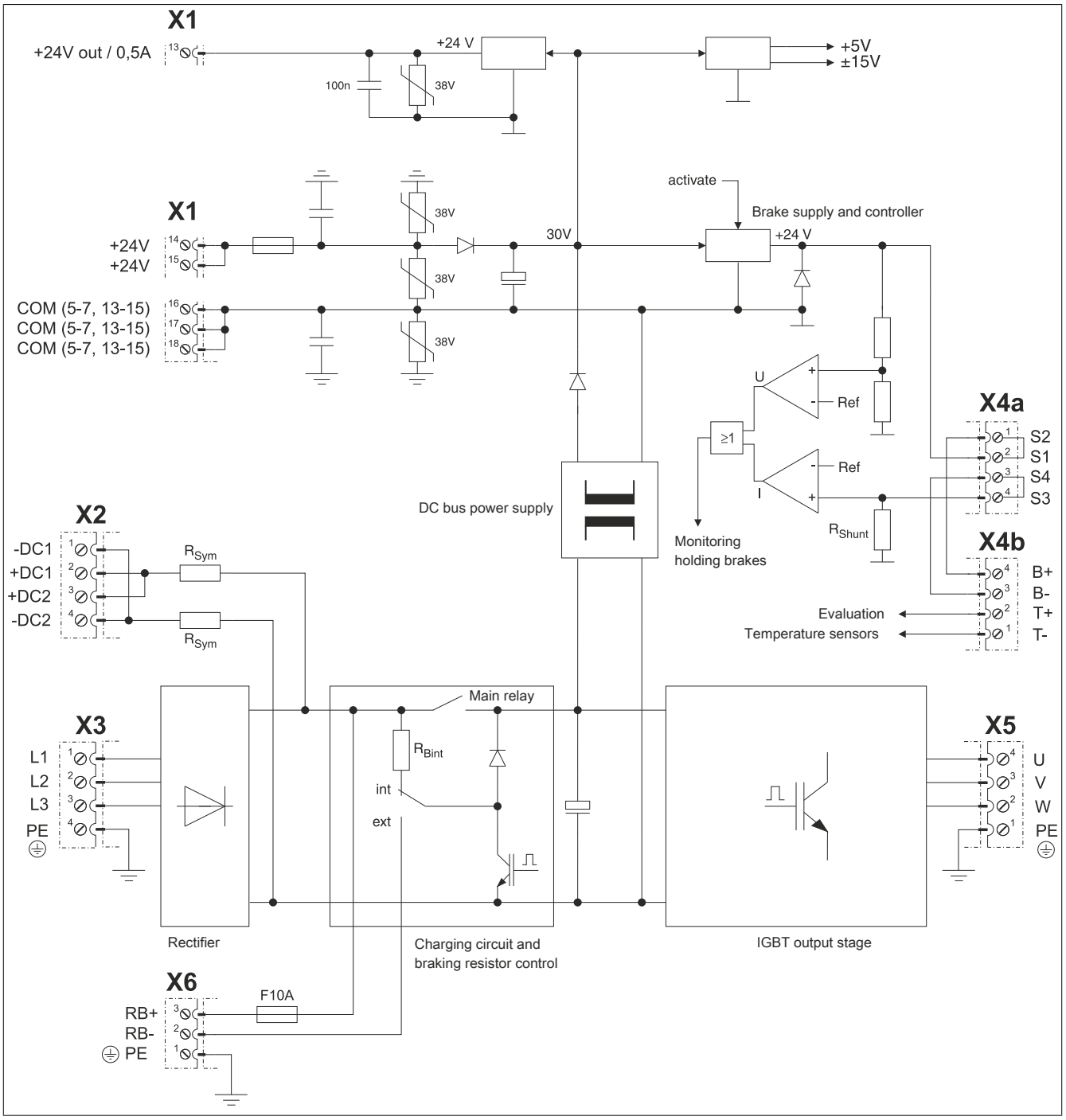


Figure 27: Input/output circuit diagram - ACOPOS 1180, 1320



Provided by Industrial Automation Co. • www.industrialautomationco.com • Parts & Repair: 877-727-8757

# 2.6 ACOPOS 1640, 128M

## 2.6.1 ACOPOS 1640

### 2.6.1.1 Order data

| Model number | Short description | Figure |
|---|---|---|
| | **Servo drives** |  |
| 8V1640.00-2 | ACOPOS servo drive, 3x 400-480 V, 64 A, 32 kW, line filter, integrated braking resistor, DC bus power supply and electronic secure restart inhibit | |
| 8V1640.001-2 | ACOPOS servo drive, 3x 400-480 V, 64 A, 32 kW, coated, line filter, integrated braking resistor, DC bus power supply and electronic secure restart inhibit | |
| | **Optional accessories** | |
| | **Braking resistors** | |
| 8B0W0045H000.000-1 | Braking resistor, 450 W, 50 R, IP20, terminals | |
| 8B0W0045H000.001-1 | Braking resistor, 450 W, 50 R, IP65, terminals | |
| 8B0W0079H000.000-1 | Braking resistor, 790 W, 33 R, IP20, terminals | |
| 8B0W0079H000.001-1 | Braking resistor, 790 W, 33 R, IP65, terminals | |
| | **Plug-in modules** | |
| 8AC110.60-2 | ACOPOS plug-in module, CAN interface | |
| 8AC110.60-3 | ACOPOS plug-in module, CAN interface | |
| 8AC114.60-2 | ACOPOS plug-in module, POWERLINK V2 interface | |
| 8AC120.60-1 | ACOPOS plug-in module, EnDat encoder and sine incremental encoder interface | |
| 8AC121.60-1 | ACOPOS plug-in module, HIPERFACE interface | |
| 8AC122.60-3 | ACOPOS plug-in module, resolver interface 10 kHz | |
| 8AC122.60-4 | ACOPOS plug-in module, resolver interface 10 kHz, no open line detection | |
| 8AC123.60-1 | ACOPOS plug-in module, incremental encoder and SSI absolute encoder interface | |
| 8AC125.60-1 | ACOPOS plug-in module, BiSS/SSI SinCos/SSI interface | |
| 8AC125.60-2 | ACOPOS plug-in module, BiSS encoder interface 5 V, baud rate 6.25 Mbit/s | |
| 8AC125.61-2 | ACOPOS plug-in module, BiSS encoder interface 12 V, baud rate 6.25 Mbit/s | |
| 8AC126.60-1 | ACOPOS plug-in module, EnDat 2.2 encoder interface | |
| 8AC130.60-1 | ACOPOS plug-in module, 8 digital I/O configurable in pairs as 24 V input or as output 400/100 mA, 2 digital outputs 2 A, order TB712 terminal block separately | |
| 8AC131.60-1 | ACOPOS plug-in module, 2 analog inputs ±10 V, 2 digital I/Os configurable as 24 V input or output 45 mA, order terminal block TB712 separately! | |
| 8AC132.60-1 | ACOPOS plug-in module, 2 analog inputs ±10 V | |
| 8AC140.60-3 | ACOPOS plug-in module, CPU, x86 100 MHz Intel compatible, 32 MB DRAM, 32 kB SRAM, removable application memory: CompactFlash, 1 CAN interface, 1 Ethernet interface 100 Base-T, 1 PROFIBUS DP slave interface, 1 RS232 interface, 3 digital I/O points configurable as 24 VDC input or 500 mA output, 1 analog input ±10 V, order program memory and 0TB708 terminal block separately | |
| 8AC140.61-3 | ACOPOS plug-in module, CPU, ARNC0, x86 100 MHz Intel compatible, 32 MB DRAM, 32 kB SRAM, removable application memory: CompactFlash, 1 CAN interface, 1 Ethernet interface 100 Base-T, 1 PROFIBUS DP slave interface, 1 RS232 interface, 3 digital I/O points configurable as 24 VDC input or 500 mA output, 1 analog input ±10 V, order program memory and 0TB708 terminal block separately | |
| 8AC141.60-2 | ACOPOS plug-in module, CPU, x86 100 MHz Intel compatible, 16 MB DRAM, 32 kB SRAM, removable application memory: CompactFlash, 2 CAN interfaces, 1 Ethernet interface 100 Base-T, 1 RS232 interface, 1 X2X Link Master interface, 3 digital I/O points configurable as 24 VDC input or 500 mA output, 1 analog input ±10 V, order program memory and 0TB704 and 0TB708 terminal blocks separately | |
| 8AC141.61-3 | ACOPOS plug-in module, CPU, ARNC0, x86 100 MHz Intel compatible, 32 MB DRAM, 32 kB SRAM, removable application memory: CompactFlash, 2 CAN interfaces, 1 Ethernet interface 100 Base-T, 1 RS232 interface, 1 X2X Link Master interface, 3 digital I/O points configurable as 24 VDC input or 500 mA output, 1 analog input ±10 V, order program memory and 0TB704 and 0TB708 terminal blocks separately | |
| | **Shielding component sets** | |
| 8X0030.00-1 | ACOPOS shielding components set for 8V1640.xxx-x and 8V128M.xxx-x | |
| | **Terminal sets** | |
| 8X0005.00-1 | ACOPOS accessories, plug set for 8V1640.00 and 8V128M.00 (3 phase) | |

Table 53: 8V1640.00-2, 8V1640.001-2 - Order data

## 2.6.1.2 Technical data

| Model number | 8V1640.00-2 | 8V1640.001-2 |
|---|---|---|
| **General information** | | |
| Note | - | Variant with partially coated circuit boards |
| B&R ID code | 0x12C9 | 0xA09C |
| Slots for plug-in modules | 4 | |
| Certification | | |
| CE | Yes | |
| cULus | Yes | |
| KC | Yes | |
| FSC | Yes | |
| **Power mains connection** | | |
| Permissible power mains forms | TT, TN [1] | |
| Mains input voltage | 3x 400 VAC to 480 VAC ±10% | |
| Frequency | 50 / 60 Hz ±4% | |
| Installed load | Max. 54 kVA | |
| Starting current at 400 VAC | 26 A | |
| Switch-on interval | >10 s | |
| Integrated line filter in accordance with EN 61800-3, Category C3 [2] | Yes | |
| Power loss at max. device power without braking resistor | Approx. 1600 W | |
| **DC bus connection** | | |
| DC bus capacitance | 3300 µF | |
| **24 VDC supply** | | |
| Input voltage | 24 VDC +25% / -20% | |
| Input capacitance | 32,800 µF | |
| Current requirements at 24 VDC [3] | | |
| Mains input voltage applied | - [4] | |
| Mains input voltage not applied | Max. 4.6 A + 1.4 * (current for the motor holding brake + current on the 24 VDC output) | |
| DC bus power supply | | |
| Switch-on voltage | 455 VDC | |
| **24 VDC output** | | |
| Output voltage | | |
| Mains input voltage applied | 22 to 24 VDC | |
| Mains input voltage not applied | 16.7 to 30 VDC [5] | |
| Output current | Max. 0.5 A | |
| **Motor connection** | | |
| Quantity | 1 | |
| Continuous current [6] | 64 $A_{eff}$ | |
| Reduction of continuous current depending on the ambient temperature | | |
| Mains input voltage: 400 VAC | | |
| Switching frequency 5 kHz | No reduction | |
| Switching frequency 10 kHz | No reduction [7] | |
| Switching frequency 20 kHz | 0.96 $A_{eff}$ per °C (starting at 25°C) | |
| Mains input voltage: 480 VAC | | |
| Switching frequency 5 kHz | No reduction | |
| Switching frequency 10 kHz | 0.96 $A_{eff}$ per °C (starting at 50°C) [7] | |
| Switching frequency 20 kHz | 0.96 $A_{eff}$ per °C (starting at 10°C) | |
| Reduction of continuous current depending on the installation elevation | | |
| Starting at 500 m above sea level | 6.4 $A_{eff}$ per 1000 m | |
| Peak current | 200 $A_{eff}$ | |
| Nominal switching frequency | 10 kHz | |
| Possible switching frequencies | 5 / 10 / 20 kHz | |
| Electrical stress of the connected motor in accordance with IEC TS 60034-25 [8] | Limit value curve A | |
| Max. motor line length | 25 m | |
| Protective measures | | |
| Overload protection | Yes | |
| Short circuit and ground fault protection | Yes | |
| Max. output frequency | 598 Hz [9] | |
| **Motor holding brake connection** | | |
| Response threshold for open line monitoring | Approx. 210 mA | |
| Max. output current | 3 A | |
| Max. number of switching cycles | Approx. 80,000 | |
| **Braking resistors** | | |
| Peak power int. / ext. | 7 / 250 kW | |
| Continuous power int. / ext. | 0.2 / 24 kW [10] | |
| Minimum braking resistance (ext.) | 2.5 Ω | |
| Rated current of the built-in fuse | 30 A (fast-acting) | |

Table 54: 8V1640.00-2, 8V1640.001-2 - Technical data



Provided by Industrial Automation Co. • www.industrialautomationco.com • Parts & Repair: 877-727-8757

| Model number | 8V1640.00-2 | 8V1640.001-2 |
|---|---|---|
| **Limit switch and reference inputs** | | |
| Quantity | 3 | |
| Wiring | Sink | |
| Electrical isolation | | |
| Input - ACOPOS | Yes | |
| Input - Input | No | |
| Input voltage | | |
| Nominal | 24 VDC | |
| Maximum | 30 VDC | |
| Switching threshold | | |
| Low | <5 V | |
| High | >15 V | |
| Input current at nominal voltage | Approx. 4 mA | |
| Switching delay | Max. 2.0 ms | |
| Modulation compared to ground potential | Max. ±38 V | |
| **Enable inputs** | | |
| Quantity | 1 | |
| Wiring | Sink | |
| Electrical isolation | | |
| Input - ACOPOS | Yes | |
| Input voltage | | |
| Nominal | 24 VDC | |
| Maximum | 30 VDC | |
| Input current at nominal voltage | Approx. 30 mA | |
| Switching threshold | | |
| Low | <5 V | |
| High | >15 V | |
| Switching delay | | |
| Enable 0 -> 1, ready for PWM | Max. 100 µs | |
| Enable 1 -> 0, PWM off | Max. 2.0 ms | |
| Modulation compared to ground potential | Max. ±38 V | |
| OSSD signal connections [11)] | Not permitted | |
| **Trigger inputs** | | |
| Quantity | 2 | |
| Wiring | Sink | |
| Electrical isolation | | |
| Input - ACOPOS | Yes | |
| Input - Input | No | |
| Input voltage | | |
| Nominal | 24 VDC | |
| Maximum | 30 VDC | |
| Switching threshold | | |
| Low | <5 V | |
| High | >15 V | |
| Input current at nominal voltage | Approx. 10 mA | |
| Switching delay | | |
| Positive edge | 52 µs ±0.5 µs (digitally filtered) | |
| Negative edge | 53 µs ±0.5 µs (digitally filtered) | |
| Modulation compared to ground potential | Max. ±38 V | |
| **Electrical characteristics** | | |
| Discharge capacitance | 5.4 µF | |
| **Operating conditions** | | |
| Permitted mounting orientations | | |
| Hanging vertically | Yes | |
| Lying horizontally | Yes | |
| Standing horizontally | No | |
| Installation at elevations above sea level | | |
| Nominal | 0 to 500 m | |
| Maximum [12)] | 2000 m | |
| Degree of pollution in accordance with EN 60664-1 | 2 (non-conductive pollution) | |
| Overvoltage category in accordance with IEC 60364-4-443:1999 | II | |
| EN 60529 protection | IP20 | |
| **Environmental conditions** | | |
| Temperature | | |
| Operation | | |
| Nominal | 5 to 40°C | |
| Maximum [13)] | 55°C | |
| Storage | -25 to 55°C | |
| Transport | -25 to 70°C | |

Table 54: 8V1640.00-2, 8V1640.001-2 - Technical data



Provided by Industrial Automation Co. • www.industrialautomationco.com • Parts & Repair: 877-727-8757

| Model number | 8V1640.00-2 | 8V1640.001-2 |
|---|---|---|
| Relative humidity | | |
| Operation | 5 to 85% | |
| Storage | 5 to 95% | |
| Transport | Max. 95% at 40°C | |
| **Mechanical characteristics** | | |
| Dimensions | | |
| Width | 276 mm | |
| Height | 460 mm | |
| Depth | 295 mm | |
| Weight | 24.1 kg | |

Table 54: 8V1640.00-2, 8V1640.001-2 - Technical data

1) In the USA, TT and TN power mains are commonly referred to as "Delta/Wye with grounded Wye neutral".
2) Limit values from EN 61800-3 C3 (second environment).
3) The current requirements depend on the configuration of the ACOPOS servo drive.
4) If the mains input voltage (3x 400 VAC to 480 VAC ±10%) is applied, then the 24 VDC supply voltage for the ACOPOS servo drive is generated by the internal DC bus power supply, reducing the 24 VDC current consumption ($I_{24\ VDC}$) to 0.
5) If the mains input voltage (3x 400 VAC to 480 VAC ±10%) is not applied, the voltage is generated at the 24 VDC output from the ACOPOS servo drive's 24 VDC supply voltage; in this case, it is between the maximum permissible and minimum permissible (reduced by max. 2.5 V) 24 VDC supply voltage of the ACOPOS servo drive.
6) Valid in the following conditions: 400 VAC mains input voltage, nominal switching frequency, 40°C ambient temperature, installation altitude <500 m above sea level.
7) Value for the nominal switching frequency.
8) If necessary, the stress of the motor isolation system be reduced by an additional externally-wired dU/dt choke. For example, the RWK 305 three-phase dU/dt choke from Schaffner (www.schaffner.com) can be used. IMPORTANT: Even when using a dU/dt choke, it is necessary to ensure that an EMC-compatible, low inductance shield connection is used!
9) The module's electrical output frequency (SCTRL_SPEED_ACT * MOTOR_POLEPAIRS) is monitored to protect against dual use in accordance with EC 428/2009 | 3A225. If the electrical output frequency of the module exceeds the limit value of 598 Hz uninterrupted for more than 0.5 s, then the current movement is aborted and error 6060 is output (power unit: limit speed exceeded).
10) Continuous power refers to the maximum braking power the ACOPOS servo drive can exchange continuously. Depending on the application, the actual continuous power provided by the external braking resistor is limited by the rated current of fuse $I_B$ (integrated in the ACOPOS servo drive), and the value of the external braking resistance $R_{BR}$.
11) OSSD (open signal switching device) signals are used to monitor signal lines for short circuits and cross faults.
12) Continuous operation of ACOPOS servo drives at altitudes ranging from 500 m to 2000 m above sea level is possible (taking the specified continuous current reductions into consideration). Requirements that go above and beyond this need to be arranged with B&R.
13) Continuous operation of ACOPOS servo drives at ambient temperatures ranging from 40°C to max. 55°C is possible (taking the specified continuous current reductions into consideration), but this will result in a shorter service life.





Provided by Industrial Automation Co. • www.industrialautomationco.com • Parts & Repair: 877-727-8757

## 2.6.2 ACOPOS 128M

### 2.6.2.1 Order data

| Model number | Short description | Figure |
|---|---|---|
| | **Servo drives** |  |
| 8V128M.00-2 | ACOPOS servo drive, 3x 400-480 V, 128 A, 64 kW, line filter, integrated braking resistor, DC bus power supply and electronic secure restart inhibit | |
| 8V128M.001-2 | ACOPOS servo drive, 3x 400-480 V, 128 A, 64 kW, coated, line filter, integrated braking resistor, DC bus power supply and electronic secure restart inhibit | |
| | **Optional accessories** | |
| | **Braking resistors** | |
| 8B0W0045H000.000-1 | Braking resistor, 450 W, 50 R, IP20, terminals | |
| 8B0W0045H000.001-1 | Braking resistor, 450 W, 50 R, IP65, terminals | |
| 8B0W0079H000.000-1 | Braking resistor, 790 W, 33 R, IP20, terminals | |
| 8B0W0079H000.001-1 | Braking resistor, 790 W, 33 R, IP65, terminals | |
| | **Plug-in modules** | |
| 8AC110.60-2 | ACOPOS plug-in module, CAN interface | |
| 8AC110.60-3 | ACOPOS plug-in module, CAN interface | |
| 8AC114.60-2 | ACOPOS plug-in module, POWERLINK V2 interface | |
| 8AC120.60-1 | ACOPOS plug-in module, EnDat encoder and sine incremental encoder interface | |
| 8AC121.60-1 | ACOPOS plug-in module, HIPERFACE interface | |
| 8AC122.60-3 | ACOPOS plug-in module, resolver interface 10 kHz | |
| 8AC122.60-4 | ACOPOS plug-in module, resolver interface 10 kHz, no open line detection | |
| 8AC123.60-1 | ACOPOS plug-in module, incremental encoder and SSI absolute encoder interface | |
| 8AC125.60-1 | ACOPOS plug-in module, BiSS/SSI SinCos/SSI interface | |
| 8AC125.60-2 | ACOPOS plug-in module, BiSS encoder interface 5 V, baud rate 6.25 Mbit/s | |
| 8AC125.61-2 | ACOPOS plug-in module, BiSS encoder interface 12 V, baud rate 6.25 Mbit/s | |
| 8AC126.60-1 | ACOPOS plug-in module, EnDat 2.2 encoder interface | |
| 8AC130.60-1 | ACOPOS plug-in module, 8 digital I/O configurable in pairs as 24 V input or as output 400/100 mA, 2 digital outputs 2 A, order TB712 terminal block separately | |
| 8AC131.60-1 | ACOPOS plug-in module, 2 analog inputs ±10 V, 2 digital I/Os configurable as 24 V input or output 45 mA, order terminal block TB712 separately! | |
| 8AC132.60-1 | ACOPOS plug-in module, 2 analog inputs ±10 V | |
| 8AC140.60-3 | ACOPOS plug-in module, CPU, x86 100 MHz Intel compatible, 32 MB DRAM, 32 kB SRAM, removable application memory: CompactFlash, 1 CAN interface, 1 Ethernet interface 100 Base-T, 1 PROFIBUS DP slave interface, 1 RS232 interface, 3 digital I/O points configurable as 24 VDC input or 500 mA output, 1 analog input ±10 V, order program memory and 0TB708 terminal block separately | |
| 8AC140.61-3 | ACOPOS plug-in module, CPU, ARNC0, x86 100 MHz Intel compatible, 32 MB DRAM, 32 kB SRAM, removable application memory: CompactFlash, 1 CAN interface, 1 Ethernet interface 100 Base-T, 1 PROFIBUS DP slave interface, 1 RS232 interface, 3 digital I/O points configurable as 24 VDC input or 500 mA output, 1 analog input ±10 V, order program memory and 0TB708 terminal block separately | |
| 8AC141.60-2 | ACOPOS plug-in module, CPU, x86 100 MHz Intel compatible, 16 MB DRAM, 32 kB SRAM, removable application memory: CompactFlash, 2 CAN interfaces, 1 Ethernet interface 100 Base-T, 1 RS232 interface, 1 X2X Link Master interface, 3 digital I/O points configurable as 24 VDC input or 500 mA output, 1 analog input ±10 V, order program memory and 0TB704 and 0TB708 terminal blocks separately | |
| 8AC141.61-3 | ACOPOS plug-in module, CPU, ARNC0, x86 100 MHz Intel compatible, 32 MB DRAM, 32 kB SRAM, removable application memory: CompactFlash, 2 CAN interfaces, 1 Ethernet interface 100 Base-T, 1 RS232 interface, 1 X2X Link Master interface, 3 digital I/O points configurable as 24 VDC input or 500 mA output, 1 analog input ±10 V, order program memory and 0TB704 and 0TB708 terminal blocks separately | |
| | **Shielding component sets** | |
| 8X0030.00-1 | ACOPOS shielding components set for 8V1640.xxx-x and 8V128M.xxx-x | |
| | **Terminal sets** | |
| 8X0005.00-1 | ACOPOS accessories, plug set for 8V1640.00 and 8V128M.00 (3 phase) | |

Table 55: 8V128M.00-2, 8V128M.001-2 - Order data

## 2.6.2.2 Technical data

| Model number | 8V128M.00-2 | 8V128M.001-2 |
|---|---|---|
| **General information** | | |
| Note | - | Variant with partially coated circuit boards |
| B&R ID code | 0x12F3 | 0xA09D |
| Slots for plug-in modules | 4 | |
| Certification | | |
| CE | Yes | |
| cULus | Yes | |
| KC | Yes | |
| FSC | Yes | |
| **Power mains connection** | | |
| Permissible power mains forms | TT, TN [1] | |
| Mains input voltage | 3x 400 VAC to 480 VAC ±10% | |
| Frequency | 50 / 60 Hz ±4% | |
| Installed load | Max. 98 kVA | |
| Starting current at 400 VAC | 26 A | |
| Switch-on interval | >10 s | |
| Integrated line filter in accordance with EN 61800-3, Category C3 [2] | Yes | |
| Power loss at max. device power without braking resistor | Approx. 3200 W | |
| **DC bus connection** | | |
| DC bus capacitance | 6600 µF | |
| **24 VDC supply** | | |
| Input voltage | 24 VDC +25% / -20% | |
| Input capacitance | 32,800 µF | |
| Current requirements at 24 VDC [3] | | |
| Mains input voltage applied | - [4] | |
| Mains input voltage not applied | Max. 5.7 A + 1.4 * (current for the motor holding brake + current on the 24 VDC output) | |
| DC bus power supply | | |
| Switch-on voltage | 455 VDC | |
| **24 VDC output** | | |
| Output voltage | | |
| Mains input voltage applied | 22 to 24 VDC | |
| Mains input voltage not applied | 16.7 to 30 VDC [5] | |
| Output current | Max. 0.5 A | |
| **Motor connection** | | |
| Quantity | 1 | |
| Continuous current [6] | 128 $A_{eff}$ | |
| Reduction of continuous current depending on the ambient temperature | | |
| Mains input voltage: 400 VAC | | |
| Switching frequency 5 kHz | No reduction [7] | |
| Switching frequency 10 kHz | 1.65 $A_{eff}$ per °C (starting at 52°C) | |
| Switching frequency 20 kHz | 1.65 $A_{eff}$ per °C (starting at 12°C) | |
| Mains input voltage: 480 VAC | | |
| Switching frequency 5 kHz | No reduction [7] | |
| Switching frequency 10 kHz | 1.65 $A_{eff}$ per °C (starting at 36°C) | |
| Switching frequency 20 kHz | 1.65 $A_{eff}$ per °C (starting at 10°C) [8] | |
| Reduction of continuous current depending on the installation elevation | | |
| Starting at 500 m above sea level | 12.8 $A_{eff}$ per 1000 m | |
| Peak current | 300 $A_{eff}$ | |
| Nominal switching frequency | 5 kHz | |
| Possible switching frequencies | 5 / 10 / 20 kHz | |
| Electrical stress of the connected motor in accordance with IEC TS 60034-25 [9] | Limit value curve A | |
| Max. motor line length | 25 m | |
| Protective measures | | |
| Overload protection | Yes | |
| Short circuit and ground fault protection | Yes | |
| Max. output frequency | 598 Hz [10] | |
| **Motor holding brake connection** | | |
| Response threshold for open line monitoring | Approx. 210 mA | |
| Max. output current | 3 A | |
| Max. number of switching cycles | Approx. 80,000 | |
| **Braking resistors** | | |
| Peak power int. / ext. | 8.5 / 250 kW | |
| Continuous power int. / ext. | 0.24 / 24 kW [11] | |
| Minimum braking resistance (ext.) | 2.5 Ω | |
| Rated current of the built-in fuse | 30 A (fast-acting) | |

Table 56: 8V128M.00-2, 8V128M.001-2 - Technical data



Provided by Industrial Automation Co. • www.industrialautomationco.com • Parts & Repair: 877-727-8757

| Model number | 8V128M.00-2 | 8V128M.001-2 |
|---|---|---|
| **Limit switch and reference inputs** | | |
| Quantity | 3 | |
| Wiring | Sink | |
| Electrical isolation | | |
| Input - ACOPOS | Yes | |
| Input - Input | No | |
| Input voltage | | |
| Nominal | 24 VDC | |
| Maximum | 30 VDC | |
| Switching threshold | | |
| Low | <5 V | |
| High | >15 V | |
| Input current at nominal voltage | Approx. 4 mA | |
| Switching delay | Max. 2.0 ms | |
| Modulation compared to ground potential | Max. ±38 V | |
| **Enable inputs** | | |
| Quantity | 1 | |
| Wiring | Sink | |
| Electrical isolation | | |
| Input - ACOPOS | Yes | |
| Input voltage | | |
| Nominal | 24 VDC | |
| Maximum | 30 VDC | |
| Input current at nominal voltage | Approx. 30 mA | |
| Switching threshold | | |
| Low | <5 V | |
| High | >15 V | |
| Switching delay | | |
| Enable 0 -> 1, ready for PWM | Max. 100 µs | |
| Enable 1 -> 0, PWM off | Max. 2.0 ms | |
| Modulation compared to ground potential | Max. ±38 V | |
| OSSD signal connections [12)] | Not permitted | |
| **Trigger inputs** | | |
| Quantity | 2 | |
| Wiring | Sink | |
| Electrical isolation | | |
| Input - ACOPOS | Yes | |
| Input - Input | No | |
| Input voltage | | |
| Nominal | 24 VDC | |
| Maximum | 30 VDC | |
| Switching threshold | | |
| Low | <5 V | |
| High | >15 V | |
| Input current at nominal voltage | Approx. 10 mA | |
| Switching delay | | |
| Positive edge | 52 µs ±0.5 µs (digitally filtered) | |
| Negative edge | 53 µs ±0.5 µs (digitally filtered) | |
| Modulation compared to ground potential | Max. ±38 V | |
| **Electrical characteristics** | | |
| Discharge capacitance | 5.4 µF | |
| **Operating conditions** | | |
| Permitted mounting orientations | | |
| Hanging vertically | Yes | |
| Lying horizontally | Yes | |
| Standing horizontally | No | |
| Installation at elevations above sea level | | |
| Nominal | 0 to 500 m | |
| Maximum [13)] | 2000 m | |
| Degree of pollution in accordance with EN 60664-1 | 2 (non-conductive pollution) | |
| Overvoltage category in accordance with IEC 60364-4-443:1999 | II | |
| EN 60529 protection | IP20 | |
| **Environmental conditions** | | |
| Temperature | | |
| Operation | | |
| Nominal | 5 to 40°C | |
| Maximum [14)] | 55°C | |
| Storage | -25 to 55°C | |
| Transport | -25 to 70°C | |

Table 56: 8V128M.00-2, 8V128M.001-2 - Technical data



Provided by Industrial Automation Co. • www.industrialautomationco.com • Parts & Repair: 877-727-8757

| Model number | 8V128M.00-2 | 8V128M.001-2 |
|---|---|---|
| Relative humidity | | |
| Operation | 5 to 85% | |
| Storage | 5 to 95% | |
| Transport | Max. 95% at 40°C | |
| **Mechanical characteristics** | | |
| Dimensions | | |
| Width | 402 mm | |
| Height | 460 mm | |
| Depth | 295 mm | |
| Weight | 33.8 kg | |

Table 56: 8V128M.00-2, 8V128M.001-2 - Technical data

1) In the USA, TT and TN power mains are commonly referred to as "Delta/Wye with grounded Wye neutral".
2) Limit values from EN 61800-3 C3 (second environment).
3) The current requirements depend on the configuration of the ACOPOS servo drive.
4) If the mains input voltage (3x 400 VAC to 480 VAC ±10%) is applied, then the 24 VDC supply voltage for the ACOPOS servo drive is generated by the internal DC bus power supply, reducing the 24 VDC current consumption ($I_{24\ VDC}$) to 0.
5) If the mains input voltage (3x 400 VAC to 480 VAC ±10%) is not applied, the voltage is generated at the 24 VDC output from the ACOPOS servo drive's 24 VDC supply voltage; in this case, it is between the maximum permissible and minimum permissible (reduced by max. 2.5 V) 24 VDC supply voltage of the ACOPOS servo drive.
6) Valid in the following conditions: 400 VAC mains input voltage, nominal switching frequency, 40°C ambient temperature, installation altitude <500 m above sea level.
7) Value for the nominal switching frequency.
8) For a mains input voltage of 480 VAC and a switching frequency of 20 kHz, a maximum continuous current of 95 $A_{eff}$ is permitted. At ambient temperatures >10°C, a reduction of the continuous current of 1.65 $A_{eff}$ per °C must be taken into consideration.
9) If necessary, the stress of the motor isolation system be reduced by an additional externally-wired dU/dt choke. For example, the RWK 305 three-phase dU/dt choke from Schaffner (www.schaffner.com) can be used. IMPORTANT: Even when using a dU/dt choke, it is necessary to ensure that an EMC-compatible, low inductance shield connection is used!
10) The module's electrical output frequency (SCTRL_SPEED_ACT * MOTOR_POLEPAIRS) is monitored to protect against dual use in accordance with EC 428/2009 | 3A225. If the electrical output frequency of the module exceeds the limit value of 598 Hz uninterrupted for more than 0.5 s, then the current movement is aborted and error 6060 is output (power unit: limit speed exceeded).
11) Continuous power refers to the maximum braking power the ACOPOS servo drive can exchange continuously. Depending on the application, the actual continuous power provided by the external braking resistor is limited by the rated current of fuse $I_B$ (integrated in the ACOPOS servo drive), and the value of the external braking resistance $R_{BR}$.
12) OSSD (open signal switching device) signals are used to monitor signal lines for short circuits and cross faults.
13) Continuous operation of ACOPOS servo drives at altitudes ranging from 500 m to 2000 m above sea level is possible (taking the specified continuous current reductions into consideration). Requirements that go above and beyond this need to be arranged with B&R.
14) Continuous operation of ACOPOS servo drives at ambient temperatures ranging from 40°C to max. 55°C is possible (taking the specified continuous current reductions into consideration), but this will result in a shorter service life.





Provided by Industrial Automation Co. • www.industrialautomationco.com • Parts & Repair: 877-727-8757

### 2.6.3 Wiring

#### Pinout overview

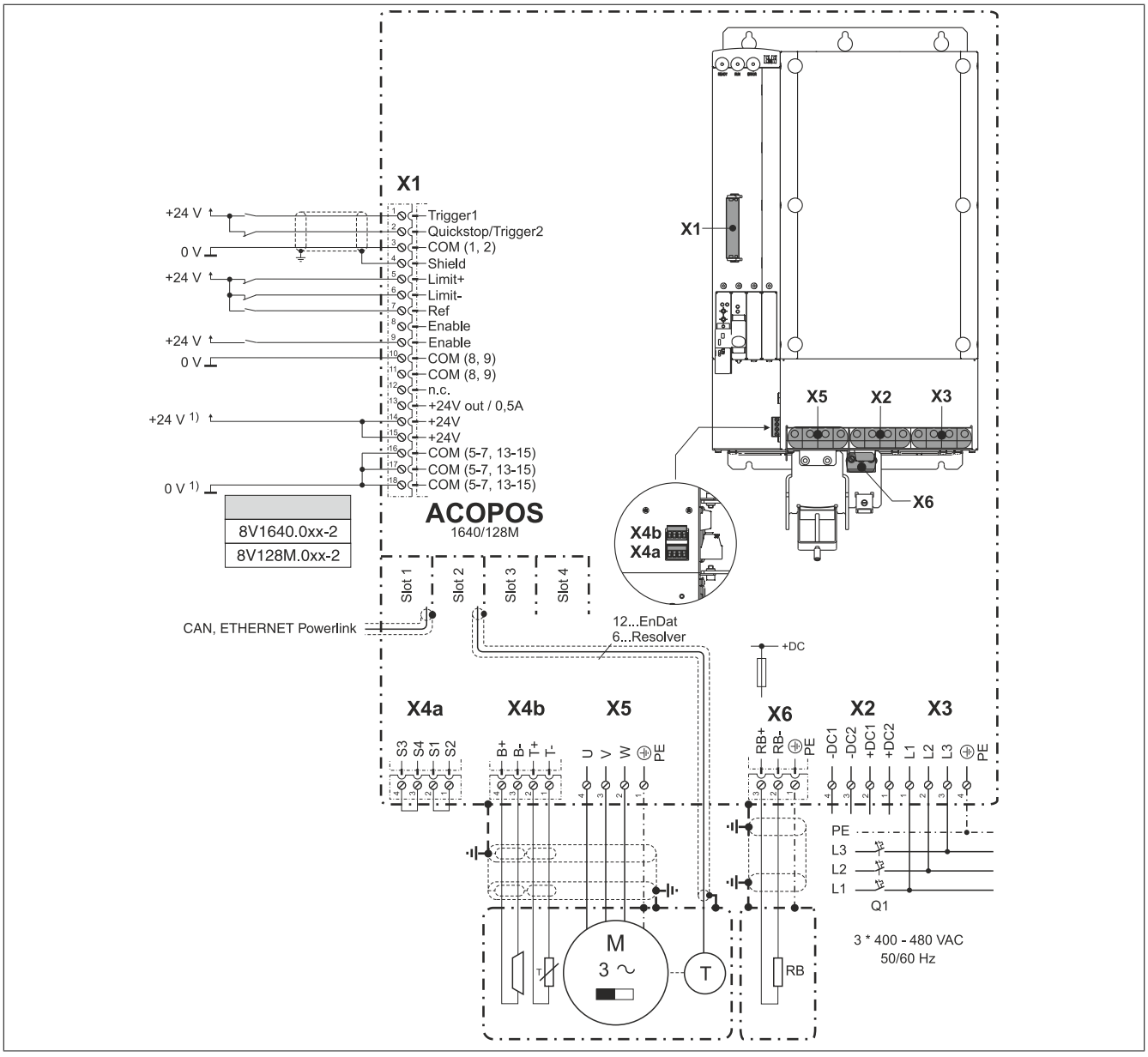


Figure 28: ACOPOS 1640, 128M - Pinout overview

1) When using an external 24 VDC supply for the ACOPOS 1640 and 128M servo drives, both +24 VDC connections (X1/14, X1/15) and at least two of the three COM connections (X1/16, X1/17, X1/18) must always be wired so that the individual terminals are not overloaded.

### 2.6.3.1 X1 - Pinout

| X1 | Pin | Description | Function |
|---|---|---|---|
| 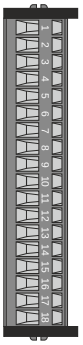 | 1 | Trigger1 | Trigger 1 |
| | 2 | Quickstop / Trigger 2 | Quickstop / Trigger 2 |
| | 3 | COM (1, 2) | Trigger 1, quickstop / Trigger 2 0 V |
| | 4 | Shield | Shield |
| | 5 | Limit+ | Positive hardware end position |
| | 6 | Limit- | Negative hardware end position |
| | 7 | Ref | Reference switch |
| | 8 | Enable [1)] | Enable |
| | 9 | Enable [1)] | Enable |
| | 10 | COM (8, 9) | Enable 0 V |
| | 11 | COM (8, 9) | Enable 0 V |
| | 12 | --- | --- |
| | 13 | +24 V out / 0.5 A | +24 V output / 0.5 A |
| | 14 | +24 V | +24 V power supply [2)] |
| | 15 | +24 V | +24 V power supply [2)] |
| | 16 | COM (5-7, 13-15) | 0 V power supply [2)] |
| | 17 | COM (5-7, 13-15) | 0 V power supply [2)] |
| | 18 | COM (5-7, 13-15) | 0 V power supply [2)] |
| | The following connections are connected internally in the device:<br>• Pin 8 → Pin 9 (enable)<br>• Pin 10 → Pin 11 (enable 0 V)<br>• Pin 14 → Pin 15 (power supply +24 V)<br>• Pin 16 → Pin 17 → Pin 18 (power supply 0 V)<br>Terminal cross section see "Overview of clampable cross sections" on page 266 | | |

Table 57: X1 - Pinout

1) Wiring is not permitted to exceed a total length of 30 m.
2) When using an external 24 VDC supply for the ACOPOS 1640 and 128M servo drives, both +24 VDC connections (X1/14, X1/15) and at least two of the three COM connections (X1/16, X1/17, X1/18) must always be wired so that the individual terminals are not overloaded.

## Information:

**To obtain a defined reference of ground to ground potential, B&R recommends grounding the COM connections (5-7, 13-15) on connector X1.**

### 2.6.3.2 X2 - Pinout

| X2 | Description | Function |
|---|---|---|
| 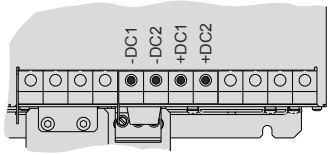 | -DC1 | U DC bus - |
| | -DC2 | U DC bus - |
| | +DC1 | U DC bus + |
| | +DC2 | U DC bus + |
| | Terminal cross section see "Overview of clampable cross sections" on page 266 | |

Table 58: X2 - Pinout

### 2.6.3.3 X3 - Pinout

## Danger!

**Servo drives are not permitted to be operated directly on IT power systems and corner-grounded TN-S power systems with protective ground conductor!**

| X3 | Description | Function |
|---|---|---|
| 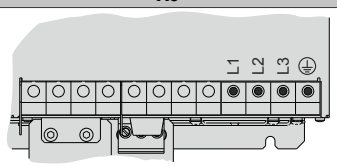 | L1 | Mains connection L1 |
| | L2 | Mains connection L2 |
| | L3 | Mains connection L3 |
| | ⏚ | Protective ground conductor |
| | Terminal cross section see "Overview of clampable cross sections" on page 266 | |

Table 59: X3 - Pinout



Provided by Industrial Automation Co. • www.industrialautomationco.com • Parts & Repair: 877-727-8757

### 2.6.3.4 X4a, X4b - Pinout

| X4a | Pin | Description | Function |
|---|---|---|---|
| 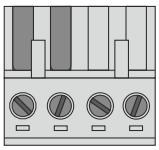 S3 S4 S1 S2 | 1 | S2 [1)] | Enabling, power supply of external holding brake (+) |
| | 2 | S1 [1)] | Enabling of external holding brake (+) |
| | 3 | S4 | Enabling, power supply of external holding brake (-) |
| | 4 | S3 | Enabling of external holding brake (-) |
| | Terminal cross section see "Overview of clampable cross sections" on page 266 | | |

Table 60: X4a - Pinout

1) If the holding brake is connected via an additional external relay contact (ground-in e.g. via connections S1/S2) instead of only via the internal transistor, then the internal quenching circuit has no effect! In this case, the customer must make sure that neither the relay contact nor the braking coil are damaged when switching off the brake. This can be done by interconnecting the coil or - better still - interconnecting the contact with a quenching circuit.

| X4b | Pin | Description | Function |
|---|---|---|---|
| 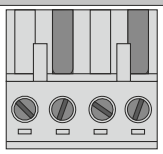 B+ B- T+ T- | 1 | T- | Temperature sensor - |
| | 2 | T+ | Temperature sensor + |
| | 3 | B- [1)] | Brake - |
| | 4 | B+ [1)] | Brake + |
| | Terminal cross section see "Overview of clampable cross sections" on page 266 | | |

Table 61: X4b - Pinout

1) If the holding brake is connected via an additional external relay contact (ground-in e.g. via connections S1/S2) instead of only via the internal transistor, then the internal quenching circuit has no effect! In this case, the customer must make sure that neither the relay contact nor the braking coil are damaged when switching off the brake. This can be done by interconnecting the coil or - better still - interconnecting the contact with a quenching circuit.

## Danger!

**The connections for the motor temperature sensors and the motor holding brake are safely isolated circuits. These connections are therefore only permitted to be connected to devices or components that have sufficient isolation per IEC 60364-4-41 or EN 61800-5-1.**

## Caution!

**If B+ and B- are swapped when connecting the permanent magnet holding brakes, then the brakes cannot be opened! ACOPOS servo drives cannot determine if a holding brake is connected with reverse polarity!**



Provided by Industrial Automation Co. • www.industrialautomationco.com • Parts & Repair: 877-727-8757

### 2.6.3.4.1 Wiring the connections for the motor holding brake

The power supply, enabling and monitoring of the output for the motor holding brake can be carried out in three different ways via the wiring of connector X4a:

| | Figure | Description |
|---|---|---|
| 1 | 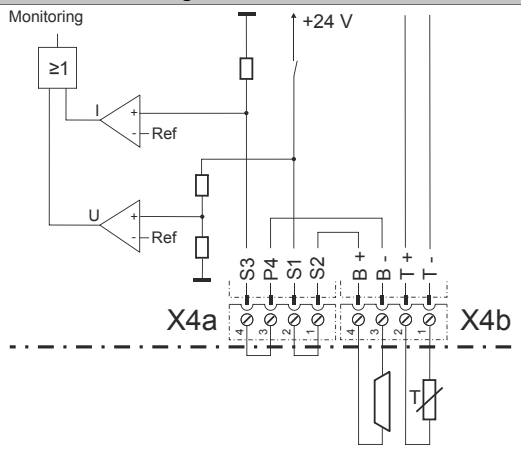 | • **Power supply:** Internal via the ACOPOS servo drive<br>• **Enabling:** Internal via the ACOPOS servo drive<br>• **Monitoring:** Internal via the ACOPOS servo drive<br>Jumpers must be placed between connections S1 and S2 as well as S3 and S4 on connector X4a. [1] |
| 2 | 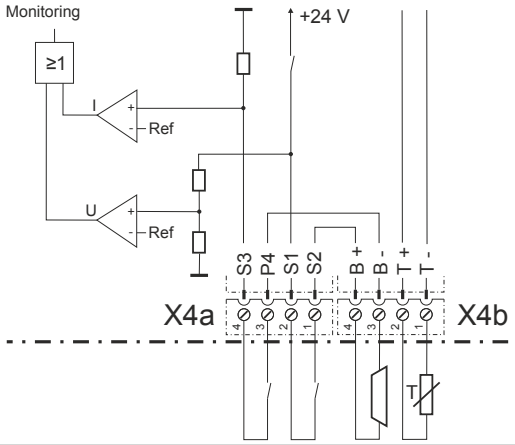 | • **Power supply:** Internal via the ACOPOS servo drive<br>• **Enabling:** Possible internally by the ACOPOS servo drive and externally by dry contacts [2]<br>• **Monitoring:** Internal via the ACOPOS servo drive<br>**Information:**<br>**ACOPOS-internal monitoring must be configured according to the requirements of the application.** [3] |
| 3 | 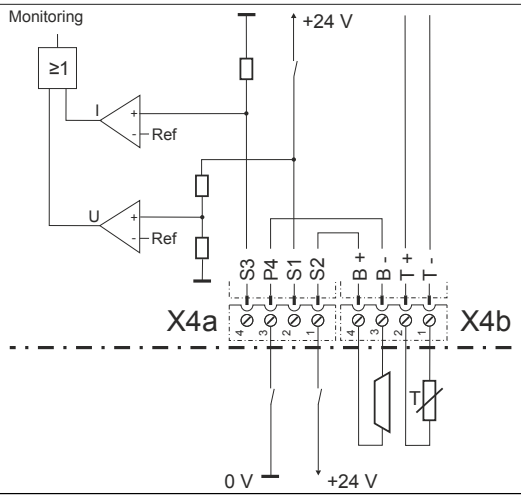 | • **Power supply:** External<br>• **Enabling:** External<br>• **Monitoring:** External<br>**Information:**<br>**ACOPOS-internal monitoring cannot be used here; it must therefore be disabled using software.** [4] |

Table 62: Enabling the external holding brake

1) The two jumpers are already wired on connector X4a supplied with ACOPOS servo drives.
2) External dry contacts can be connected between S1 and S2 and between S3 and S4. This makes it possible to enable the holding brake via external safety circuits independently of the control integrated in the ACOPOS servo drive.
3) Configuration takes place using ParID 90 (1 ... Internal monitoring active, 5 ... Internal monitoring not active).
4) Disabling takes place using ParID 90 (5 ... Internal monitoring not active).



Provided by Industrial Automation Co. • www.industrialautomationco.com • Parts & Repair: 877-727-8757

### 2.6.3.5 X5 - Pinout

| X5 | Description | Function |
|---|---|---|
| 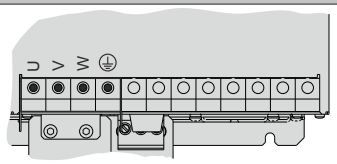 | U | Motor connection U |
| | V | Motor connection V |
| | W | Motor connection W |
| | ⏚ | Protective ground conductor |
| | Terminal cross section see "Overview of clampable cross sections" on page 266 | |

Table 63: X5 - Pinout

### 2.6.3.6 X6 - Pinout

| X6 | Pin | Description | Function |
|---|---|---|---|
| 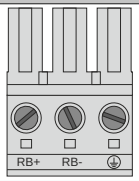 | 1 | PE | Protective ground conductor |
| | 2 | RB- | Braking resistor - |
| | 3 | RB+ | Braking resistor + |
| | Terminal cross section see "Overview of clampable cross sections" on page 266 | | |

Table 64: X6 - Pinout

### 2.6.3.7 Input/Output circuit diagram

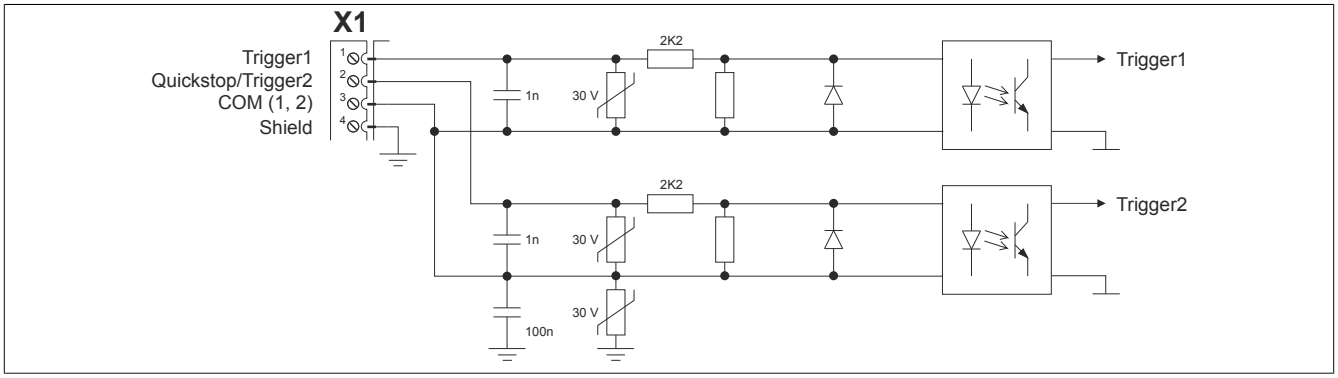


Figure 29: Trigger

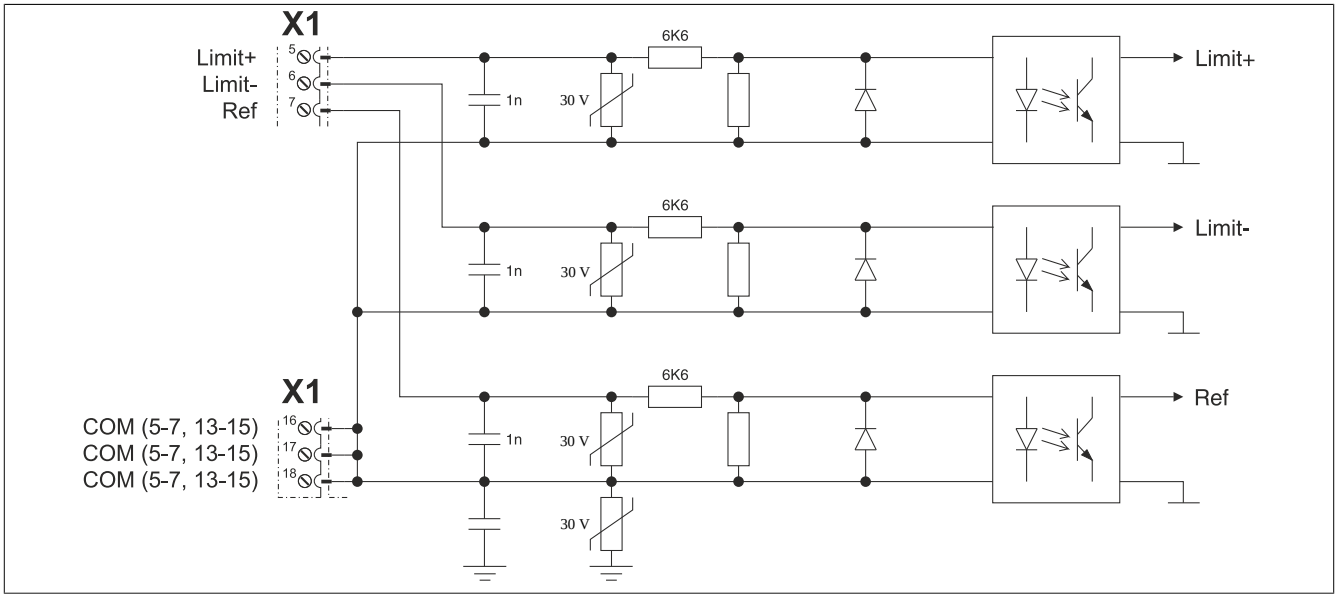


Figure 30: Limit



Provided by Industrial Automation Co. • www.industrialautomationco.com • Parts & Repair: 877-727-8757

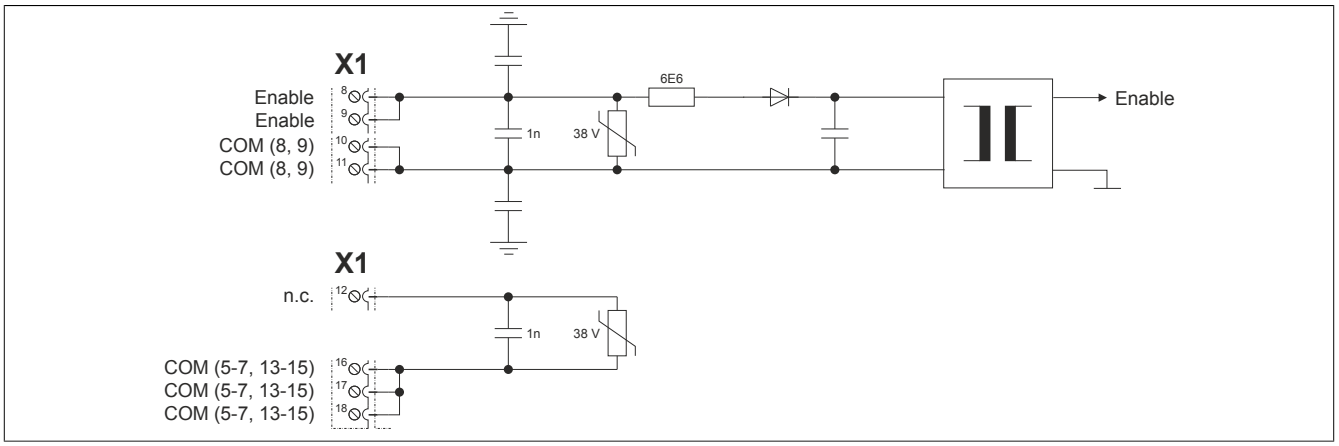


Figure 31: Enable

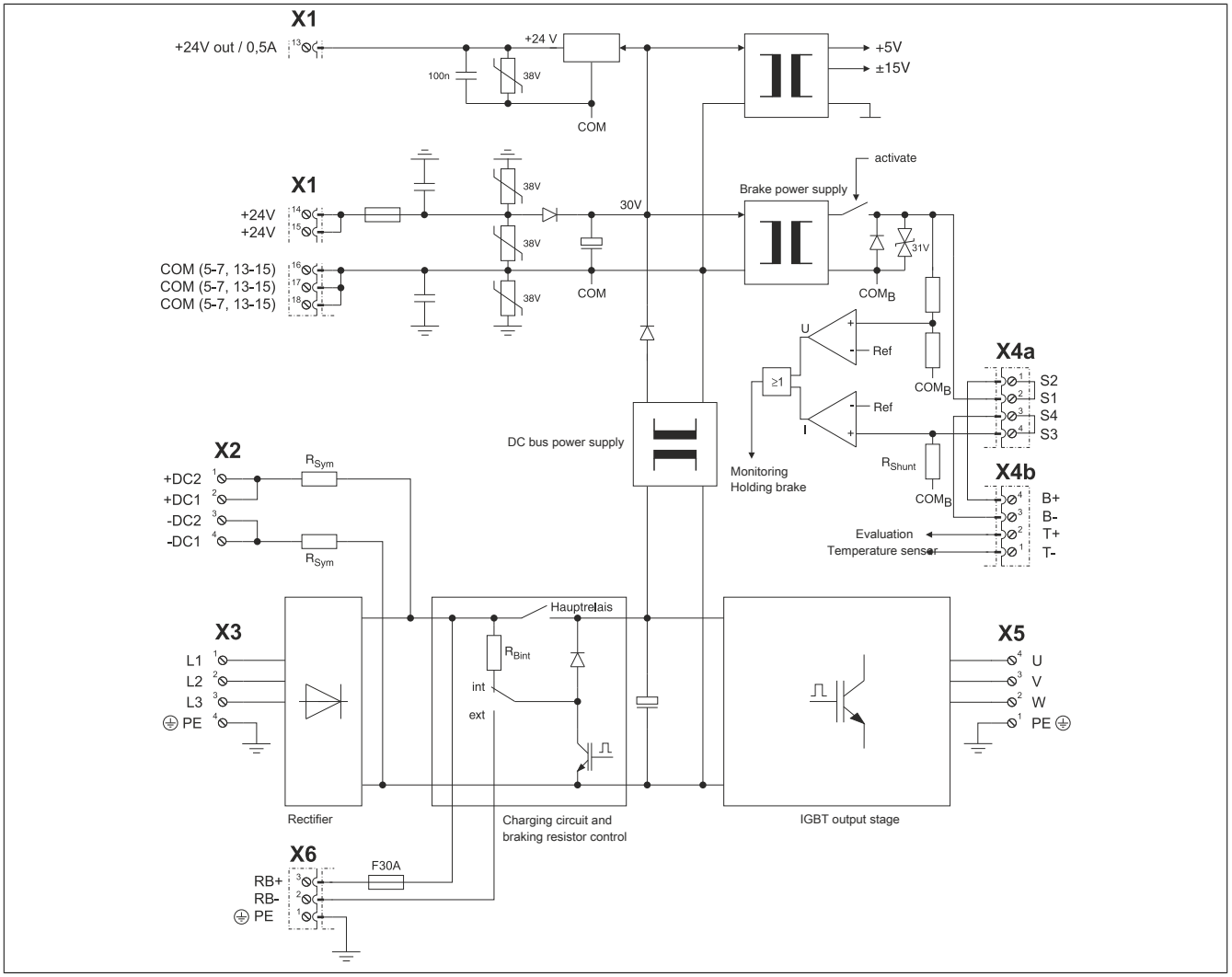


Figure 32: ACOPOS 1640, 128M - Input/Output circuit diagram



Provided by Industrial Automation Co. • www.industrialautomationco.com • Parts & Repair: 877-727-8757

# 3 ACOPOS plug-in modules

## 3.1 General information

Depending on their size, ACOPOS servo drives are equipped with up to four slots for plug-in modules:

| | 8V1010.0xx-2<br>8V1010.5xx-2<br>8V1016.0xx-2<br>8V1016.5xx-2 | 8V1022.0xx-2<br>8V1045.0xx-2<br>8V1090.0xx-2 | 8V1180.0xx-2<br>8V1320.0xx-2 | 8V1640.0xx-2<br>8V128M.0xx-2 |
|---|---|---|---|---|
| Max. number of plug-in modules | 3 | 4 | | |

Table 65: The maximum number of plug-in modules depends on the size of the servo drive

You can select the plug-in modules required for your application and insert them into the ACOPOS servo drive.

All ACOPOS servo drives are equipped with three or four slots for plug-in modules depending on the size of the drive. Please note the following module arrangements:

| Figure | Plug-in module | Operation possible in | | | |
|---|---|---|---|---|---|
| | | Slot 1 | Slot 2 | Slot 3 | Slot 4 [1] |
|  | 8AC110.60-3 | Yes | No | No | No |
| | 8AC114.60-2 | Yes | No | No | No |
| | 8AC120.60-1 | No | Yes | Yes | Yes |
| | 8AC121.60-1 | No | Yes | Yes | Yes |
| | 8AC122.60-3 | No | Yes | Yes | Yes |
| | 8AC122.60-4 | No | Yes | Yes | Yes |
| | 8AC123.60-1 | No | Yes | Yes | Yes |
| | 8AC125.60-1 | No | Yes | Yes | Yes |
| | 8AC125.60-2 | No | Yes | Yes | Yes |
| | 8AC125.61-2 | No | Yes | Yes | Yes |
| | 8AC126.60-1 | No | Yes | Yes | Yes |
| | 8AC130.60-1 | No | No | Yes | Yes |
| | 8AC131.60-1 | No | Yes | Yes | Yes |

Table 66: Slot overview for ACOPOS plug-in modules

1) Not available for ACOPOS servo drives 8V1010.xxx-2 and 8V1016.xxx-2.

## Caution!

**For the installation and removal of plug-in modules, the specifications listed in section "Protection against electrostatic discharge" on page 21 must be followed!**

## 3.2 AC110 - CAN module

### 3.2.1 General information

The AC110 plug-in module is equipped with a CAN interface. This fieldbus interface is used for communication and setting parameters on the ACOPOS servo drive for standard applications. The connections and software of the 8AC110.60-3 plug-in module are compatible with the 8AC110.60-2 plug-in module.

### 3.2.2 Order data

| Model number | Short description | Figure |
|---|---|---|
| | **Plug-in modules** |  |
| 8AC110.60-3 | ACOPOS plug-in module, CAN interface | |
| | **Optional accessories** | |
| | **Infrastructure components** | |
| 0AC912.9 | Bus adapter, CAN, 1 CAN interface | |
| 0AC913.92 | Bus adapter, CAN, 2 CAN interfaces, including 30 cm attachment cable (DSUB) | |
| 7AC911.9 | Bus connector, CAN | |

Table 67: 8AC110.60-3 - Order data

### 3.2.3 Technical data

| Model number | 8AC110.60-3 |
|---|---|
| **General information** | |
| Module type | ACOPOS plug-in module |
| B&R ID code | 0xE248 |
| Slot | Slot 1 |
| Power consumption | Max. 0.7 W |
| Certifications | |
| CE | Yes |
| UL | cULus E225616<br>Power conversion equipment |
| KC | Yes |
| **Interfaces** | |
| CAN | |
| Quantity | 1 |
| Module-side connection | 9-pin male DSUB connector |
| Status indicators | RXD/TXD LEDs |
| Baud rate | 500 kbit/s |
| Electrical isolation | Yes |
| Max. distance | 60 m |
| Network-capable | Yes |
| Bus terminating resistor | Externally wired |
| **Ambient conditions** | |
| Temperature | |
| Operation | |
| Nominal | 5 to 40°C |
| Maximum | 55°C |
| Storage | -25 to 55°C |
| Transport | -25 to 70°C |
| Relative humidity | |
| Operation | 5 to 85% |
| Storage | 5 to 95% |
| Transport | Max. 95% at 40°C |

Table 68: 8AC110.60-3 - Technical data

### 3.2.4 CAN node number settings

The CAN node number can be set using two HEX switches:

| Figure | Rotary code switch | CAN node number |
|---|---|---|
|  | ❶ | 16s position (high) |
| | ❷ | 1s position (low) |
| | The node number change takes effect the next time the ACOPOS servo drive is switched on. | |
| | **Information:**<br>**Changing the node number using software is not possible (Basis CAN ID can be changed).**<br>**The ACOPOS Manager only supports node numbers 1 - 32.** | |

Table 69: Setting the CAN node number

There must be a terminating resistor (120 Ω, 0.25 W) between CAN_H and CAN_L at the beginning and end of the CAN bus.

### 3.2.5 Status indicators

The status LEDs indicate if data is being received (RXD) or sent (TXD).

### 3.2.6 Firmware

The firmware is part of the operating system for the ACOPOS servo drives. Firmware is updated by updating the ACOPOS operating system.

### 3.2.7 Wiring

#### 3.2.7.1 Pinout

| Figure | X11 | Pin | Name | Function |
|---|---|---|---|---|
|  | 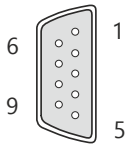 | 1 | --- | --- |
| | | 2 | CAN_L | CAN low |
| | | 3 | COM (2, 7)) | 0 V CAN card |
| | | 4 | --- | --- |
| | | 5 | --- | --- |
| | | 6 | --- | --- |
| | | 7 | CAN_H | CAN high |
| | | 8 | --- | --- |
| | | 9 | --- | --- |

Table 70: AC110 CAN interface - Pinout

#### 3.2.7.2 Input/Output circuit diagram

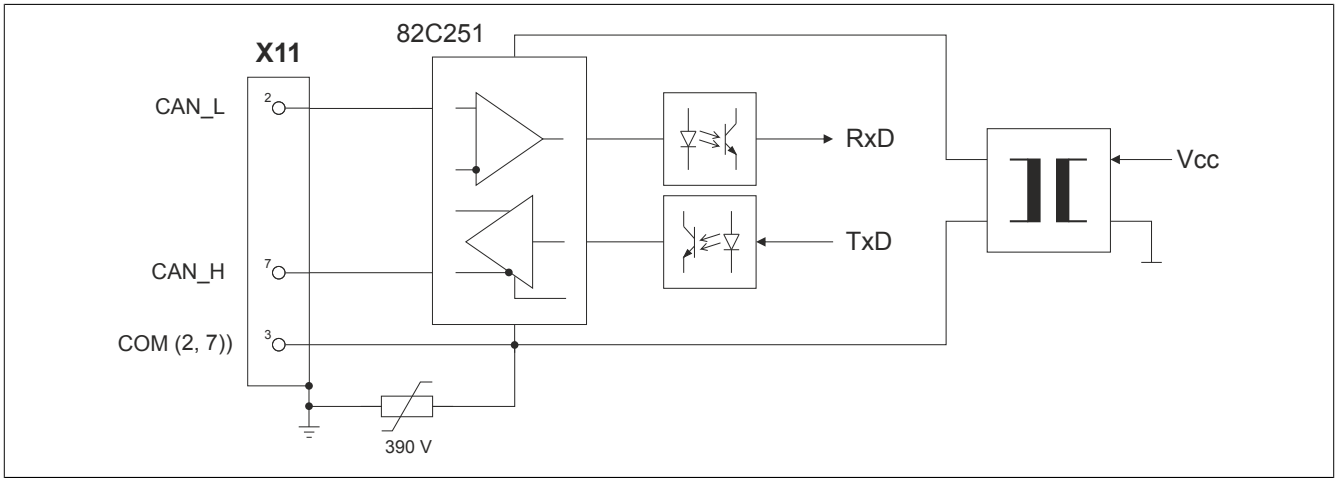


Figure 33: AC110 - Input/Output circuit diagram

## 3.3 AC114 - POWERLINK V2 module

### 3.3.1 General information

The AC114 plug-in module is equipped with a POWERLINK interface. This fieldbus interface is used for communication and setting parameters on the ACOPOS servo drive for complex and time critical applications.

The plug-in module is a 2x hub. This makes it easy to establish a device-to-device connection (line topology).

### 3.3.2 Order data

| Model number | Short description | Figure |
|---|---|---|
| | **Plug-in modules** |  |
| 8AC114.60-2 | ACOPOS plug-in module, POWERLINK V2 interface | |
| | **Optional accessories** | |
| | **POWERLINK/Ethernet cables** | |
| X20CA0E61.00020 | POWERLINK/Ethernet connection cable, RJ45 to RJ45, 0.2 m | |
| X20CA0E61.00050 | POWERLINK/Ethernet connection cable, RJ45 to RJ45, 0.5 m | |
| X20CA0E61.00100 | POWERLINK/Ethernet connection cable, RJ45 to RJ45, 1 m | |
| X20CA0E61.00200 | POWERLINK/Ethernet connection cable, RJ45 to RJ45, 2 m | |
| X20CA0E61.00500 | POWERLINK/Ethernet connection cable, RJ45 to RJ45, 5 m | |
| X20CA0E61.00600 | POWERLINK/Ethernet-Verbindungskabel, RJ45 auf RJ45, 6 m | |
| X20CA0E61.01000 | POWERLINK/Ethernet connection cable, RJ45 to RJ45, 10 m | |
| X20CA0E61.01800 | POWERLINK/Ethernet-Verbindungskabel, RJ45 auf RJ45, 18 m | |

Table 71: 8AC114.60-2 - Order data

### 3.3.3 Technical data

| Model number | 8AC114.60-2 |
|---|---|
| **General information** | |
| Module type | ACOPOS plug-in module |
| B&R ID code | 0xA5C1 |
| Slot | Slot 1 |
| Power consumption | Max. 3 W |
| Certifications | |
| CE | Yes |
| UL | cULus E225616<br>Power conversion equipment |
| KC | Yes |
| **Interfaces** | |
| POWERLINK | |
| Quantity | 1 |
| Module-side connection | 2x RJ45 port |
| Status indicators | Status LED + 2x Link LED |
| Transfer rate | 100 Mbit/s |
| 2-port hub | Yes |
| Possible station operating modes | Synchronous to POWERLINK cycle |
| Electrical isolation | Yes |
| Cabling topology | Star or tree with level 2 hubs |
| Maximum number of hub levels | 10 |
| Cable length | Max. 100 m between two stations (segment length) [1)] |
| Network-capable | Yes |
| Watchdog functionality | |
| Hardware | Yes (via ACOPOS servo drive) |
| Software | Yes (via ACOPOS servo drive) |
| **Ambient conditions** | |
| Temperature | |
| Operation | |
| Nominal | 5 to 40°C |
| Maximum | 55°C |
| Storage | -25 to 55°C |
| Transport | -25 to 70°C |

Table 72: 8AC114.60-2 - Technical data

| Model number | 8AC114.60-2 |
|---|---|
| Relative humidity | |
| Operation | 5 to 85% |
| Storage | 5 to 95% |
| Transport | Max. 95% at 40°C |

Table 72: 8AC114.60-2 - Technical data

1) With 10 ACOPOS servo drives and a cycle time of 400 µs, the maximum total cable length becomes 200 m.

### 3.3.4 Setting the POWERLINK node number

The POWERLINK node number can be set using two HEX switches:

| Image | Code switch | POWERLINK node number |
|---|---|---|
|  | ❶ | 16s position (high) |
| | ❷ | 1s position (low) |
| | A changed POWERLINK node number will take effect the next time the ACOPOS servo drive is switched on. | |
| | **Information:**<br>**In principle, node numbers between $01 and $FD are permitted. However, node numbers between $F0 and $FD are intended for future system expansions. To ensure compatibility, these node numbers should be avoided.**<br>**Node numbers $00, $FE and $FF are reserved and may therefore not be set.** | |

Table 73: Setting the POWERLINK node number

### 3.3.5 Status indicators

| Figure | LED | Labeling | Color | Function | Description |
|---|---|---|---|---|---|
|  | ❶ | R/E | Green/Red | Ready/Error | See "LED-Status POWERLINK". |
| | ❷ | RX | Green | Link / data activity | |

Table 74: AC114 - Status LEDs

#### 3.3.5.1 POWERLINK - LED status indicators

| Labeling | Color | Function | Description | |
|---|---|---|---|---|
| R/E | Green/Red | Ready/Error | LED not lit | The module is not receiving power or initialization of the network interface has failed. |
| | | | Red (lit) | The POWERLINK station number of the module is 0. |
| | | | Red/green, blinking | The client is in an error state (drops out of cyclic operation). |
| | | | Green (blinking) (single) | The client detects a valid POWERLINK frame on the network. |
| | | | Green (blinking) (2x) | Cyclic operation on the network is taking place, but the client itself is not yet a participant. |
| | | | Green (blinking) (3x) | Cyclic operation of the client is in preparation. |
| | | | Green (lit) | The client is participating in cyclic operation. |
| | | | Green (flickering) | The client is not participating in cyclic operation and also does not detect any other stations on the network participating in cyclic operation. |
| RX | Green | Link / data activity | Green (not lit) | Hardware not connected |
| | | | Green (lit) | Hardware connected |
| | | | Green (flickering) | Activity on port |

Table 75: POWERLINK - LED status indicators

### 3.3.6 Firmware

The firmware is part of the operating system for the ACOPOS servo drives. Firmware is updated by updating the ACOPOS operating system.

### 3.3.7 Wiring

#### 3.3.7.1 Pinout

| Figure | IF2 | Pin | Name | Function |
|---|---|---|---|---|
|  | 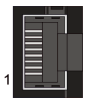 | 1 | RXD | Receive signal |
| | | 2 | RXD\ | Receive signal inverted |
| | | 3 | TXD | Transmit signal |
| | | 4 | Shield | Shield |
| | | 5 | Shield | Shield |
| | | 6 | TXD\ | Transmit signal inverted |
| | | 7 | Shield | Shield |
| | | 8 | Shield | Shield |
| | **IF1** | **Pin** | **Name** | **Function** |
| |  | 1 | RXD | Receive signal |
| | | 2 | RXD\ | Receive signal inverted |
| | | 3 | TXD | Transmit signal |
| | | 4 | Shield | Shield |
| | | 5 | Shield | Shield |
| | | 6 | TXD\ | Transmit signal inverted |
| | | 7 | Shield | Shield |
| | | 8 | Shield | Shield |

Table 76: AC114 POWERLINK V2 interface - Pinout

## Information:

**In general, crossover Ethernet cables must be used for POWERLINK connections!**

**Cables should be plugged in and unplugged carefully. Otherwise, the shield connection could break between the RJ45 connector and the cable shield which could then cause connection disturbances!**

#### 3.3.7.2 Input/output diagram

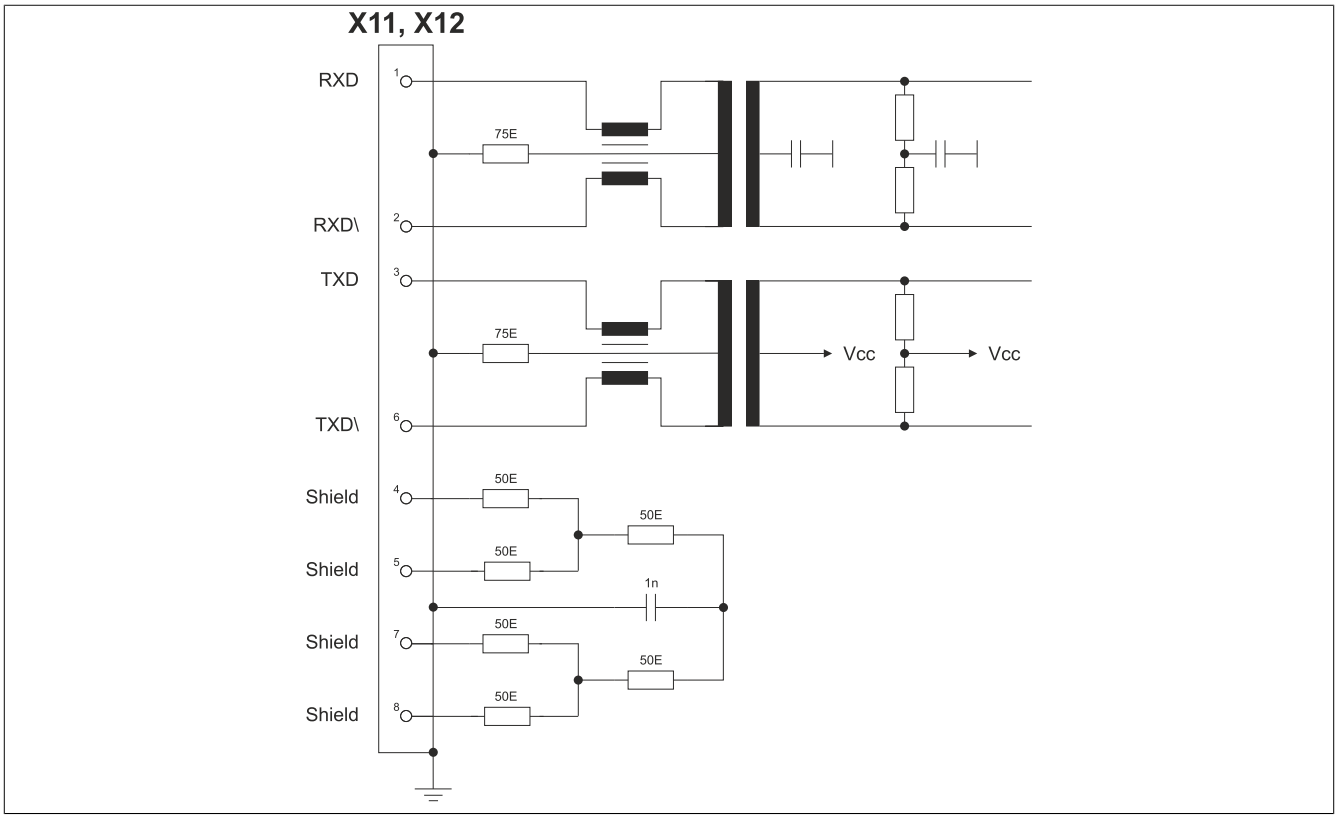


Figure 34: AC114 - Input/Output circuit diagram

## 3.4 AC120 - EnDat 2.1 encoder module

### 3.4.1 General information

The AC120 plug-in module has an EnDat 2.1 encoder interface but can also be used to evaluate simple incremental encoders with a sinusoidal output signal. [1)]

This module can be used to evaluate encoders installed in B&R servo motors as well as encoders for external axes (encoders that scan any machine movement). The input signals are monitored. This makes it possible to detect open circuits, conductor faults and failures in the encoder power supply.

During startup, the plug-in module is automatically identified, configured and its parameters set by the ACOPOS servo drive operating system.

**EnDat 2.1 encoder:**

EnDat 2.1 is a standard developed by Johannes Heidenhain GmbH (www.heidenhain.de) that incorporates the advantages of absolute and incremental position measurement and also offers a read/write parameter memory in the encoder. With absolute position measurement (the absolute position is sampled serially), a homing procedure for referencing is usually not required. Where necessary, a multi-turn encoder (4096 revolutions) should be installed. To reduce costs, a single-turn encoder and a reference switch can also be used. In this case, a homing procedure must be carried out.

The incremental process allows the short delay times necessary for position measurement on drives with exceptional dynamic properties. With the sinusoidal incremental signal and the fine resolution in the EnDat module, a very high positioning resolution is achieved in spite of the moderate signal frequencies used.

The parameter memory in the EnDat encoder is used by B&R to store motor data (among other things). In this way, the ACOPOS drive system is always automatically provided the correct motor parameters and limit values. This is referred to as the "embedded parameter chip".

**Incremental encoder with sine formed output signal:**

When using the AC120 plug-in module to evaluate simple incremental encoders with an sinusoidal output signal, only the incremental transfer channel is used. The "embedded parameter chip" it not available in this case because this encoder does not have parameter memory. The absolute position is also not available immediately after switching the device on. In this situation, a homing procedure normally has to be carried out. The module is equipped with a reference pulse input for this purpose.

### 3.4.2 Order data

| Model number | Short description | Figure |
|---|---|---|
| | **Plug-in modules** |  |
| 8AC120.60-1 | ACOPOS plug-in module, EnDat encoder and sine incremental encoder interface | |
| | **Optional accessories** | |
| | **EnDat 2.1 cables** | |
| 8CE005.12-1 | EnDat 2.1 cable, length 5 m, 10x 0.14 mm² + 2x 0.5 mm², 17-pin female Intercontec EnDat connector, 15-pin male DSUB servo connector, can be used in cable drag chains | |
| 8CE007.12-1 | EnDat 2.1 cable, length 7 m, 10x 0.14 mm² + 2x 0.5 mm², 17-pin female Intercontec EnDat connector, 15-pin male DSUB servo connector, can be used in cable drag chains | |
| 8CE010.12-1 | EnDat 2.1 cable, length 10 m, 10x 0.14 mm² + 2x 0.5 mm², 17-pin female Intercontec EnDat connector, 15-pin male DSUB servo connector, can be used in cable drag chains | |
| 8CE015.12-1 | EnDat 2.1 cable, length 15 m, 10x 0.14 mm² + 2x 0.5 mm², 17-pin female Intercontec EnDat connector, 15-pin male DSUB servo connector, can be used in cable drag chains | |
| 8CE020.12-1 | EnDat 2.1 cable, length 20 m, 10x 0.14 mm² + 2x 0.5 mm², 17-pin female Intercontec EnDat connector, 15-pin male DSUB servo connector, can be used in cable drag chains | |
| 8CE025.12-1 | EnDat 2.1 cable, length 25 m, 10x 0.14 mm² + 2x 0.5 mm², 17-pin female Intercontec EnDat connector, 15-pin male DSUB servo connector, can be used in cable drag chains | |

Table 77: 8AC120.60-1 - Order data

[1)] Starting with revision F0.

### 3.4.3 Technical data

| Model number | 8AC120.60-1 |
|---|---|
| **General information** | |
| Module type | ACOPOS plug-in module |
| B&R ID code | 0x0FCC |
| Slot [1] | Slots 2, 3 and 4 |
| Power consumption | |
| Depends on connected encoder | Yes |
| E0 ... EnDat single-turn, 512 lines | Max. 2.3 W |
| E1 ... EnDat multi-turn, 512 lines | Max. 3.1 W |
| E2 ... EnDat single-turn, 32 lines (inductive) | Max. 3.1 W |
| E3 ... EnDat multi-turn, 32 lines (inductive) | Max. 3.1 W |
| E4 ... EnDat single-turn, 512 lines | Max. 2.4 W |
| E5 ... EnDat multi-turn, 512 lines | Max. 2.7 W |
| E8 ... EnDat single-turn, 16 lines (inductive) | Max. 2.9 W |
| E9 ... EnDat multi-turn, 16 lines (inductive) | Max. 3.1 W |
| EA ... EnDat single-turn, 32 lines (inductive) | Max. 2.7 W |
| EB ... EnDat multi-turn, 32 lines (inductive) | Max. 3.0 W |
| Certifications | |
| CE | Yes |
| UL | cULus E225616<br>Power conversion equipment |
| KC | Yes |
| **Encoder inputs** | |
| Quantity | 1 |
| Module-side connection | 15-pin female DSUB |
| Status indicators | UP/DN LEDs |
| Electrical isolation | |
| Encoder - ACOPOS | No |
| Encoder monitoring | Yes |
| Max. encoder cable length | 50 m [2] |
| Encoder power supply | |
| Output voltage | Typ. 5 V |
| Load capacity | 250 mA [3] |
| Sense lines | 2, compensation of max. 2x 0.7 V |
| Sine/Cosine inputs | |
| Signal transmission | Differential signals, symmetrical |
| Signal frequency (-3 dB) | DC up to 300 kHz |
| Signal frequency (-5 dB) | DC up to 400 kHz |
| Differential voltage | 0.5 to 1.25 $V_{ss}$ |
| Common-mode voltage | Max. ±7 V |
| Terminating resistor | 120 Ω |
| Resolution [4] | 16384 * Number of encoder lines |
| Accuracy [5] | - |
| Reference input | |
| Signal transmission | Differential signal, symmetrical |
| Differential voltage for low | ≤-0.2 V |
| Differential voltage for high | ≥+0.2 V |
| Common-mode voltage | Max. ±7 V |
| Terminating resistor | 120 Ω |
| Serial interface | |
| Signal transmission | Synchronous |
| Protocol | RS485 |
| Baud rate | 625 kbaud |
| **Ambient conditions** | |
| Temperature | |
| Operation | |
| Nominal | 5 to 40°C |
| Maximum | 55°C |
| Storage | -25 to 55°C |
| Transport | -25 to 70°C |
| Relative humidity | |
| Operation | 5 to 85% |
| Storage | 5 to 95% |
| Transport | Max. 95% at 40°C |

Table 78: 8AC120.60-1 - Technical data

1) The AC120 is an encoder module. It is also possible to connect multiple encoder modules. In this case, the encoder module in the smallest slot automatically serves as motor feedback.
2) Requirement: Wiring takes place with a shielded cable with a wire cross section of min. 0.14 mm² for all signal lines and a wire cross section of min. 0.5 mm² for all encoder power supply lines. The sense lines must be used.
3) The value refers only to the encoder. The actual load capacity of the encoder power supply is approx. 300 mA. The difference of approx. 50 mA covers the consumption of the always-existing terminating resistors. For longer encoder cables, it is important to ensure that the voltage drop on the supply wires (back and forth) is not permitted to exceed 1.45 V. This can reduce the permissible load current.

4) Depending on the resolution of the connected encoder, only part of this resolution can be used in practice. In addition, the usable resolution can be reduced by signal noise of the connected encoder.
5) In practice, the accuracy is limited by the encoder.

### 3.4.4 Status indicators

The UP/DN LEDs are lit depending on the rotational direction and the speed of the connected encoder.

UP LED ... Lit when the encoder position changes in the positive direction.
DN LED ... Lit when the encoder position changes in the negative direction.

The faster the encoder position changes, the brighter the respective LED is lit.

### 3.4.5 Firmware

The firmware is part of the operating system for the ACOPOS servo drives. Firmware is updated by updating the ACOPOS operating system.

### 3.4.6 Wiring

#### 3.4.6.1 Pinout

| Figure | X11 | Pin | Name | Function | |
|---|---|---|---|---|---|
| | | | | EnDat mode | Incremental mode |
|   | 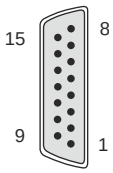  | 1 | A | Channel A | |
| | | 2 | COM (1, 3 - 9, 11, 13 - 15) | Encoder supply 0 V | |
| | | 3 | B | Channel B | |
| | | 4 | 5 V out / 0.25 A | Encoder power supply 5 V | |
| | | 5 | D | Data input | --- |
| | | 6 | --- | --- | |
| | | 7 | R\ | --- | Reference pulse inverted |
| | | 8 | T | Clock output | --- |
| | | 9 | A\ | Channel A inverted | |
| | | 10 | Sense COM | Sense input 0 V | |
| | | 11 | B\ | Channel B inverted | |
| | | 12 | Sense 5 V | Sense input 5 V | |
| | | 13 | D\ | Data inverted | --- |
| | | 14 | R | --- | Reference pulse |
| | | 15 | T\ | Clock output inverted | --- |

Table 79: AC120 EnDat encoder interface - Pinout

## Danger!

**The connections for the encoders are isolated circuits. These connections are therefore only permitted to be connected to devices or components that have sufficient isolation in accordance with IEC 60364-4-41 or EN 61800-5-1.**

### 3.4.6.2 Input/Output circuit diagram

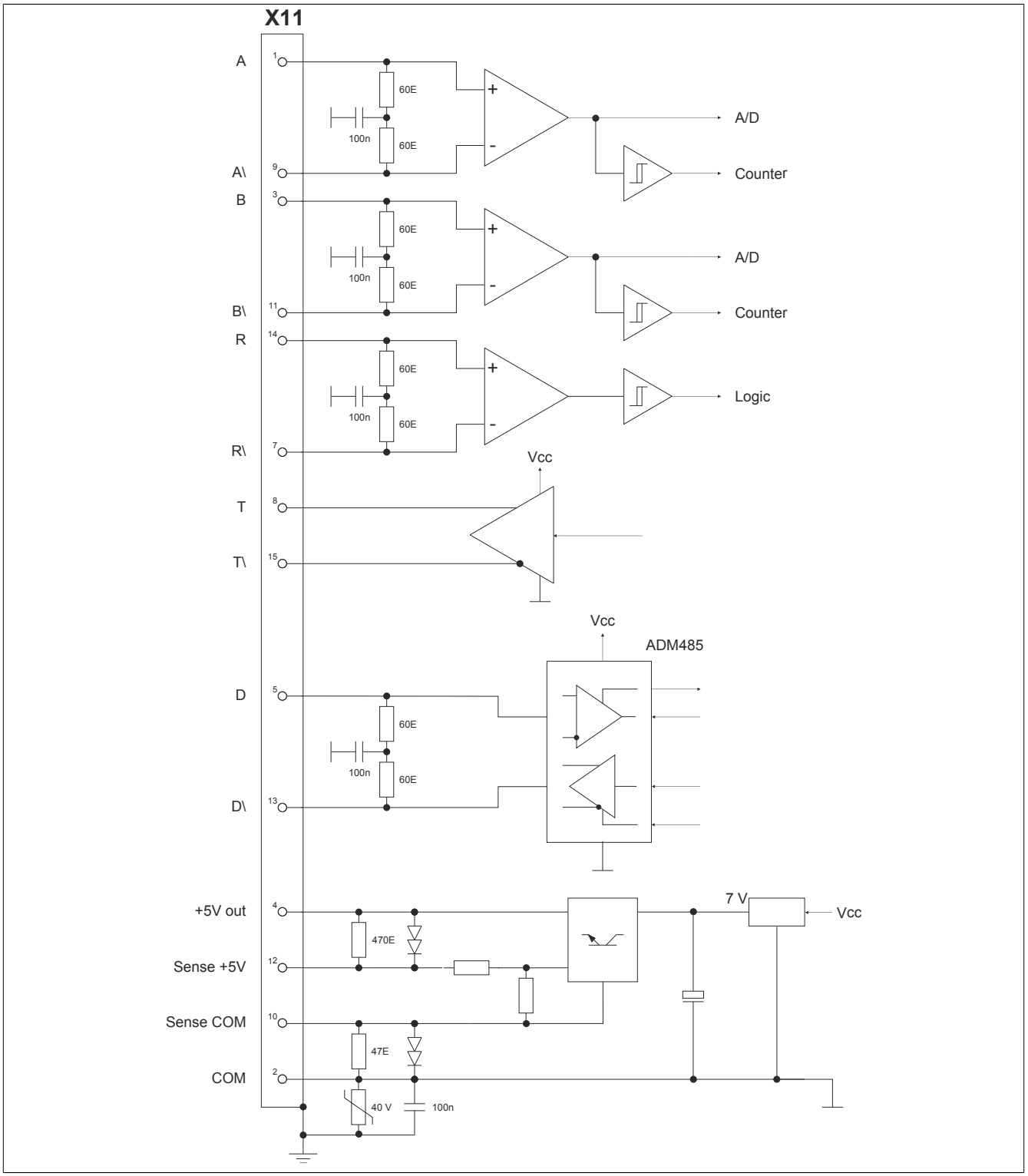


Figure 35: AC120 - Input/Output circuit diagram



Provided by Industrial Automation Co. • www.industrialautomationco.com • Parts & Repair: 877-727-8757

## 3.5 AC121 - HIPERFACE encoder module

### 3.5.1 General information

The AC121 plug-in module is equipped with a HIPERFACE encoder interface.

This module can be used to evaluate encoders installed in motors from other manufacturers as well as encoders for external axes (encoders that scan any machine movement). The input signals are monitored. This makes it possible to detect open or shorted lines as well as encoder supply failures.

During startup, the plug-in module is automatically identified, configured and its parameters set by the ACOPOS servo drive operating system.

**HIPERFACE**

HIPERFACE is a standard developed by Max Stegmann GmbH (www.stegmann.de), which like EnDat incorporates the advantages of absolute and incremental position measurement while also offering a read/write parameter memory in the encoder. With absolute position measurement (the absolute position is sampled serially), a homing procedure for referencing is usually not required. Where necessary, a multi-turn encoder (4096 revolutions) should be installed. To reduce costs, a single-turn encoder and a reference switch can also be used. In this case, a homing procedure must be carried out.
The incremental process allows the short deceleration periods necessary for position measurement when using drives with highly dynamic characteristics. The sinusoidal incremental signal and extremely high resolution in the HIPERFACE module also make it possible to achieve a very high degree of positioning precision despite the moderate signal frequencies used.
The parameter memory in the HIPERFACE encoder is available starting with firmware version V1.221.

### 3.5.2 Order data

| Model number | Short description | Figure |
|---|---|---|
| | **Plug-in modules** | |
| 8AC121.60-1 | ACOPOS plug-in module, HIPERFACE interface |  |

Table 80: 8AC121.60-1 - Order data

### 3.5.3 Technical data

| Model number | 8AC121.60-1 |
|---|---|
| **General information** | |
| Module type | ACOPOS plug-in module |
| B&R ID code | 0x1558 |
| Slot [1)] | Slots 2, 3 and 4 |
| Power consumption | |
| With encoder current consumption of 0 mA | 0.35 W |
| With encoder current consumption of 100 mA | 1.4 W |
| With encoder current consumption of 170 mA | 2.1 W |
| Certifications | |
| CE | Yes |
| UL | cULus E225616<br>Power conversion equipment |
| KC | Yes |
| **Encoder inputs** | |
| Quantity | 1 |
| Module-side connection | 15-pin female DSUB, 2 pins closed |
| Status indicators | UP/DN LEDs |

Table 81: 8AC121.60-1 - Technical data

| Model number | 8AC121.60-1 |
|---|---|
| Electrical isolation | |
| Encoder - ACOPOS | No |
| Encoder monitoring | Yes |
| Max. encoder cable length | 50 m 2) |
| Encoder power supply | |
| Output voltage | 8 to 9 V |
| Load capacity | 170 mA |
| Sense lines | - 3) |
| Sine/Cosine inputs | |
| Signal transmission | Differential signal, asymmetrical |
| Signal frequency | DC up to 200 kHz |
| Differential voltage | 0.5 to 1.25 $V_{ss}$ |
| Common-mode voltage | Max. ±7 V |
| Terminating resistor | 120 Ω |
| Resolution 4) | 16384 * Number of encoder lines |
| Accuracy 5) | - |
| Serial interface | |
| Signal transmission | Asynchronous |
| Protocol | RS485 |
| Baud rate | 9600 baud |
| **Ambient conditions** | |
| Temperature | |
| Operation | |
| Nominal | 5 to 40°C |
| Maximum | 55°C |
| Storage | -25 to 55°C |
| Transport | -25 to 70°C |
| Relative humidity | |
| Operation | 5 to 85% |
| Storage | 5 to 95% |
| Transport | Max. 95% at 40°C |

Table 81: 8AC121.60-1 - Technical data

1) The AC121 is an encoder module. It is also possible to connect multiple encoder modules. In this case, the module in the smallest slot automatically serves as motor feedback.
2) Requirement: Wiring of the encoder takes place with a shielded cable with a wire cross section of min. 0.14 mm² for all signal lines and a wire cross section of min. 0.5 mm² for all encoder power supply lines. The sense lines must be used.
3) No sense lines are present since the supply voltage for the HIPERFACE encoder is permitted to be between 7 and 12 V.
4) Noise on the encoder signal reduces the resolution that can be used by approx. 5 bits (factor of 32).
5) In practice, the accuracy is limited by the encoder.

### 3.5.4 Status indicators

The UP/DN LEDs are lit depending on the rotational direction and the speed of the connected encoder.

UP LED ... Lit when the encoder position changes in the positive direction.
DN LED ... Lit when the encoder position changes in the negative direction.

The faster the encoder position changes, the brighter the respective LED is lit.

### 3.5.5 Firmware

The firmware is part of the operating system for the ACOPOS servo drives. Firmware is updated by updating the ACOPOS operating system.

### 3.5.6 Wiring

#### 3.5.6.1 Pinout

| Figure | X11 | Pin | Name | Function |
|---|---|---|---|---|
|  | 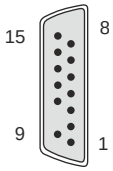 | 1 | SIN | Channel SIN |
| | | 2 | COM (1, 3 - 5, 9, 11, 13) | Encoder supply 0 V |
| | | 3 | COS | Channel COS |
| | | 4 | 8 V out / 0.15 A | Encoder power supply 8 V |
| | | 5 | D | Data |
| | | 6 | --- | --- |
| | | 7 | --- | --- |
| | | 8 | --- | --- [1] |
| | | 9 | REF SIN | Reference for SIN |
| | | 10 | --- | --- [1] |
| | | 11 | REF COS | Reference for COS |
| | | 12 | --- | --- |
| | | 13 | D\ | Data inverted |
| | | 14 | --- | --- |
| | | 15 | --- | --- |

Table 82: AC121 HIPERFACE encoder interface - Pinout

1) Pins 8 and 10 are closed with plastic plugs. This prevents the accidental connection of a B&R EnDat cable.

## Danger!

**The connections for the encoders are isolated circuits. These connections are therefore only permitted to be connected to devices or components that have sufficient isolation in accordance with IEC 60364-4-41 or EN 61800-5-1.**

### 3.5.6.2 Input/Output circuit diagram

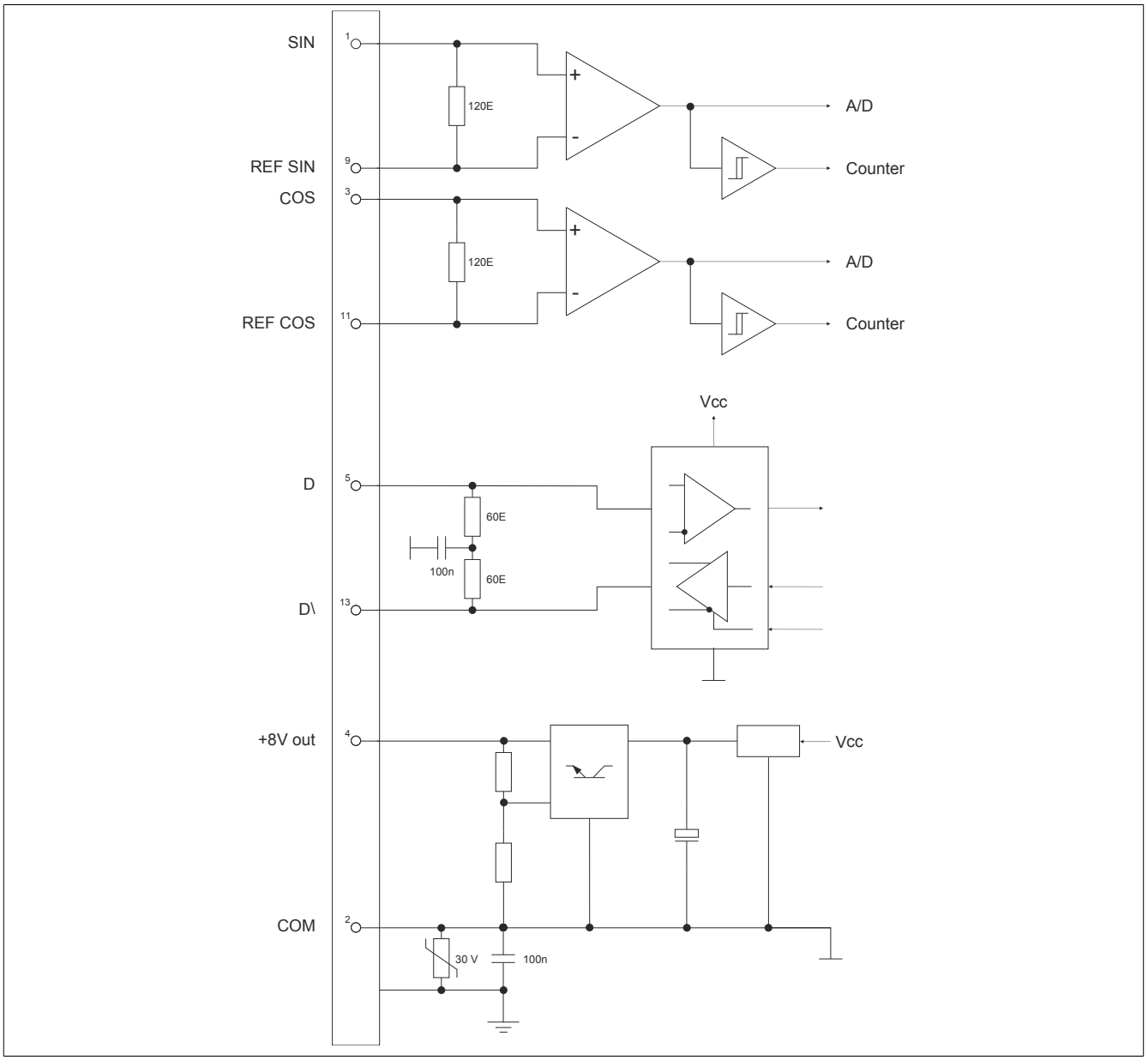


Figure 36: AC121 - Input/Output circuit diagram



Provided by Industrial Automation Co. • www.industrialautomationco.com • Parts & Repair: 877-727-8757

## 3.6 AC122 - Resolver module

### 3.6.1 8AC122.60-3

#### 3.6.1.1 General information

The AC122 plug-in module is equipped with a resolver interface.

This plug-in module handles the output from resolvers which are built into B&R servo motors or used as an encoder for external axes. This resolver delivers the absolute position over one revolution. Normally, the movement path is longer than one revolution. In this case, a reference switch must be used and a homing procedure carried out.

The encoder input signals are monitored. This makes it possible to detect open or shorted lines as well as encoder supply (reference signal) failures.

During startup, the plug-in module is automatically identified by the ACOPOS operating system. Making automatic adjustments to the motor (motor parameters, limit values, encoder resolution, etc.) is not possible because the resolver does not have parameter memory like the EnDat encoder.

If the precision, resolution, bandwidth or ease of setting parameters is not sufficient with the resolver, the EnDat system should be used (see "AC120 - EnDat 2.1 encoder module " on page 110).

#### 3.6.1.2 Order data

| Model number | Short description | Figure |
|---|---|---|
| | **Plug-in modules** | 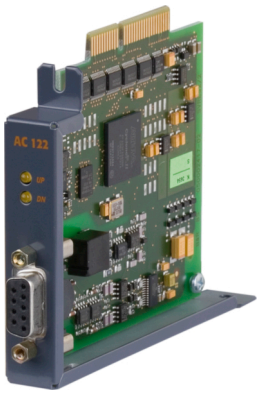 |
| 8AC122.60-3 | ACOPOS plug-in module, resolver interface 10 kHz | |
| | **Optional accessories** | |
| | **Resolver cables** | |
| 8CR005.12-1 | Resolver cable, length 5 m, 3x 2x 24 AWG (19x 0.127), 12-pin female Intercontec resolver connector, 9-pin male DSUB servo connector, can be used in cable drag chains | |
| 8CR007.12-1 | Resolver cable, length 7 m, 3x 2x 24 AWG (19x 0.127), 12-pin female Intercontec resolver connector, 9-pin male DSUB servo connector, can be used in cable drag chains | |
| 8CR010.12-1 | Resolver cable, length 10 m, 3x 2x 24 AWG (19x 0.127), 12-pin female Intercontec resolver connector, 9-pin male DSUB servo connector, can be used in cable drag chains | |
| 8CR015.12-1 | Resolver cable, length 15 m, 3x 2x 24 AWG (19x 0.127), 12-pin female Intercontec resolver connector, 9-pin male DSUB servo connector, can be used in cable drag chains | |
| 8CR020.12-1 | Resolver cable, length 20 m, 3x 2x 24 AWG (19x 0.127), 12-pin female Intercontec resolver connector, 9-pin male DSUB servo connector, can be used in cable drag chains | |
| 8CR025.12-1 | Resolver cable, length 25 m, 3x 2x 24 AWG (19x 0.127), 12-pin female Intercontec resolver connector, 9-pin male DSUB servo connector, can be used in cable drag chains | |

Table 83: 8AC122.60-3 - Order data

### 3.6.1.3 Technical data

| Model number | 8AC122.60-3 |
|---|---|
| **General information** | |
| Module type | ACOPOS plug-in module |
| B&R ID code | 0xA48B |
| Slot [1] | Slots 2, 3 and 4 |
| Power consumption | Max. 2.5 W |
| Max. cable length | 100 m |
| Certifications | |
| CE | Yes |
| UL | cULus E225616<br>Power conversion equipment |
| KC | Yes |
| **Resolver inputs** | |
| Reference output | |
| Output current | Max. 50 $mA_{eff}$ |
| Differential voltage | Typ. 3.4 $V_{eff}$ |
| Frequency | 10 kHz |
| Signal transmission | Differential signals |
| Angular position resolution | 14 bits/rev [2] |
| Module-side connection | 9-pin female DSUB connector |
| Status indicators | UP/DN LEDs |
| Bandwidth | 2.5 kHz |
| Encoder monitoring | Yes |
| Accuracy | ±8 angular minutes |
| Electrical isolation | |
| Resolver - ACOPOS | No |
| Resolver | |
| Input frequency | 10 kHz |
| Input voltage | 3 to 7 $V_{rms}$ |
| Number of pins | 2-pin |
| Type | BRX [3] |
| Max. phase shift | ±45° |
| Max. elec. angular error | ±10 angular minutes |
| Nominal transformation ratio [4] | 0.5 ±10% |
| Sine/Cosine inputs | |
| Input impedance at 10 kHz (per pin) | 10.4 kΩ - j 11.1 kΩ |
| Signal transmission | Differential signals |
| Encoder-ACOPOS electrical isolation | No, common-mode voltage on the sine-cosine inputs max ± 20 V |
| **Ambient conditions** | |
| Temperature | |
| Operation | |
| Nominal | 5 to 40°C |
| Maximum | 55°C |
| Storage | -25 to 55°C |
| Transport | -25 to 70°C |
| Relative humidity | |
| Operation | 5 to 85% |
| Storage | 5 to 95% |
| Transport | Max. 95% at 40°C |

Table 84: 8AC122.60-3 - Technical data

1) The AC122 is a single encoder module. It is also possible to insert multiple encoder modules. In this case, the encoder module in the slot with the lowest number is automatically used for motor feedback.
2) A resolution of 12 bits/rev is configured by default, but it can be changed to 14 bits/rev.
3) BRX resolvers are fed with a sine signal (reference signal) from the module and provide two sine signals with a 90° phase shift as a result. The amplitude of these signals changes with the angular position of the resolver. Unlike BRX resolvers, BRT resolvers can be fed with two sine signals which are offset by 90°. A single sine signal with constant amplitude is returned. The phase position of this signal changes with the angular position of the resolver. An evaluation of BRT resolvers with the 8AC122.60-3 is fundamentally possible starting with firmware V2.040; however, resolution and accuracy are limited by the inverse operation of the resolver. Additionally, the nominal conversion ratio deviates from the default value of 0.5 and must be configured accordingly.
4) Starting with firmware V2.040, the nominal gear ratio can be configured in the range 0.3 ... 0.5 (default value).
Starting with firmware V2.230, the nominal gear ratio can be configured in the range 0.2 ... 0.5 (default value).

### 3.6.2 Status indicators

The UP/DN LEDs are lit depending on the rotational direction and the speed of the connected encoder.

UP LED ... Lit when the encoder position changes in the positive direction.
DN LED ... Lit when the encoder position changes in the negative direction.

The faster the encoder position changes, the brighter the respective LED is lit.

### 3.6.3 Wiring

#### 3.6.3.1 Pinout

| Figure | X11 | Pin | Name | Function | Typical wire colors for the resolver |
|---|---|---|---|---|---|
|   | 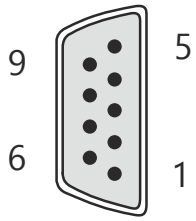  | 1 | --- | --- | --- |
| | | 2 | --- | --- | --- |
| | | 3 | S4 | Sine input + | Blue |
| | | 4 | S1 | Cosine input - | Red |
| | | 5 | R2 | Reference output + | black/white (or yellow/white) |
| | | 6 | --- | --- | --- |
| | | 7 | S2 | Sine input - | Yellow |
| | | 8 | S3 | Cosine input + | Black |
| | | 9 | R1 | Reference output - | red/white |

Table 85: AC122 resolver interface - Pinout

## Danger!

**The connections for the encoders are isolated circuits. These connections are therefore only permitted to be connected to devices or components that have sufficient isolation in accordance with IEC 60364-4-41 or EN 61800-5-1.**

#### 3.6.3.2 Input/Output circuit diagram

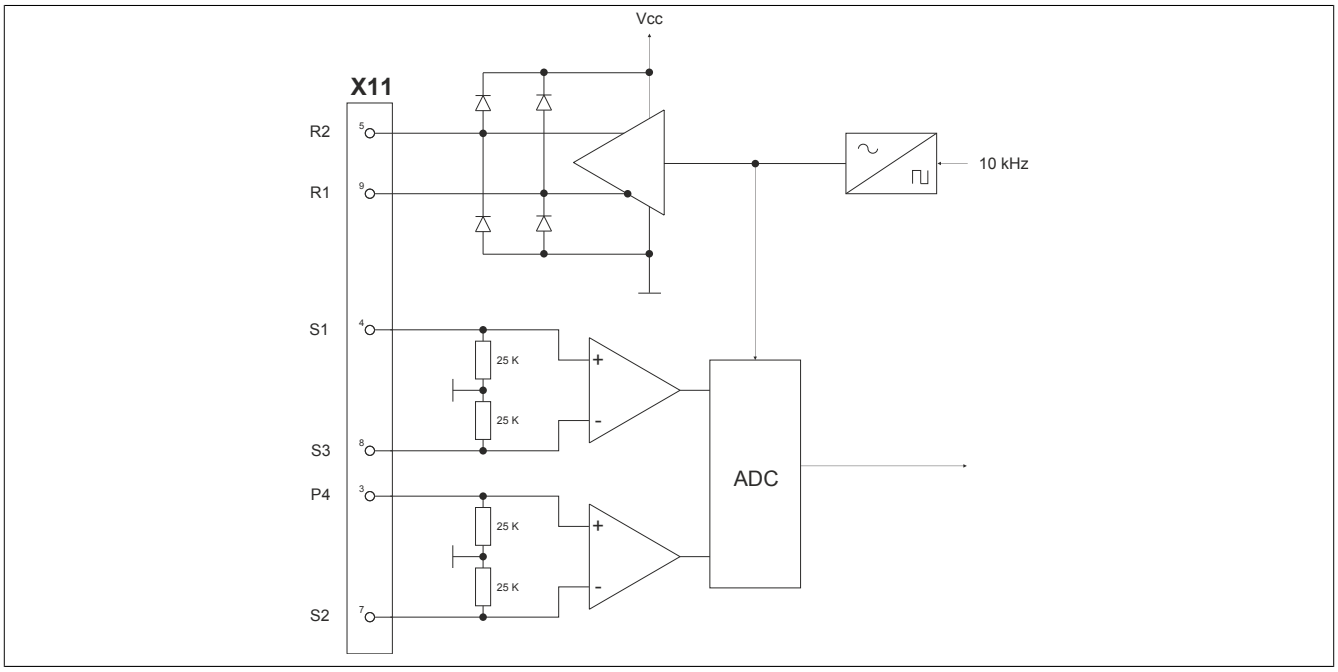


Figure 37: Input/Output circuit diagram AC122 - Resolver interface

## 3.7 AC123 - Incremental encoder and SSI absolute encoder module

### 3.7.1 General information

The AC123 ACOPOS plug-in module is used to optionally connect industrial standard incremental encoders and absolute encoders with a synchronous serial interface (SSI) to ACOPOS servo drives. This makes it possible to implement an electronic gearbox for which the master movement is scanned by an external encoder. If the encoder resolution is sufficiently high, it is also possible to use motor feedback for induction motors.

With incremental encoders, the maximum counter frequency is 800kHz. Single and multi-turn encoders with a maximum of 31 bits at 200 kbaud can be read as SSI absolute encoders.

Position detection is cyclically initiated by the module and is exactly synchronized with the controller clock of the ACOPOS servo drive. The input signals are monitored for both encoder types. This makes it possible to detect open circuits, conductor faults and failures in the encoder power supply.

With incremental encoders the counter frequency and distance between edges is also monitored. With absolute encoders, the parity bit is evaluated and a plausibility check carried out.

### 3.7.2 Order data

| Model number | Short description | Figure |
|---|---|---|
| | **Plug-in modules** | |
| 8AC123.60-1 | ACOPOS plug-in module, incremental encoder and SSI absolute encoder interface |  |

Table 86: 8AC123.60-1 - Order data

### 3.7.3 Technical data

| Model number | 8AC123.60-1 |
|---|---|
| **General information** | |
| Module type | ACOPOS plug-in module |
| B&R ID code | 0x1067 |
| Slot [1] | Slots 2, 3 and 4 |
| Power consumption | Max. 7.5 W<br>Depends on the current consumption of the connected encoder [2] |
| Certifications | |
| CE | Yes |
| UL | cULus E225616<br>Power conversion equipment |
| KC | Yes |
| **Encoder inputs** | |
| Quantity | 1 |
| Signal transmission | Differential signal transfer |
| Module-side connection | 15-pin female DSUB connector |
| Status indicators | UP/DN LEDs |
| Electrical isolation | |
| Encoder - ACOPOS | Yes |
| Encoder monitoring | Yes |
| Max. encoder cable length [3] | 50 m |
| **Encoder power supply** | |
| Load capacity | |
| 5 VDC | 350 mA |
| 15 VDC | 350 mA |
| Short-circuit proof, overload protection | Yes |
| Supply voltages | Internal, either 5 V or 15 V |

Table 87: 8AC123.60-1 - Technical data

| Model number | 8AC123.60-1 |
|---|---|
| Sense lines | |
| For 5 VDC | Yes, 2, compensation of max. 2 V |
| For 15 VDC | No |
| **Incremental encoders** | |
| Counter size | 32-bit |
| Input frequency | Max. 200 kHz |
| Evaluation | 4x |
| Signal form | Square wave pulse |
| Counter frequency | Max. 800 kHz |
| Reference frequency | Max. 200 kHz |
| Distance between edges | Min. 0.6 µs |
| Inputs | A, A\, B, B\, R, R\ |
| Differential voltage inputs A, B, R | |
| Minimum | 2.5 V |
| Maximum | 6 V |
| **SSI absolute encoder** | |
| Keying | Gray, binary |
| Baud rate | 200 kbit/s |
| Word size | Max. 31-bit |
| Differential voltage clock output - 120 Ω | |
| Minimum | 2.5 V |
| Maximum | 5 V |
| Differential voltage data input | |
| Minimum | 2.5 V |
| Maximum | 6 V |
| **Ambient conditions** | |
| Temperature | |
| Operation | |
| Nominal | 5 to 40°C |
| Maximum | 55°C |
| Storage | -25 to 55°C |
| Transport | -25 to 70°C |
| Relative humidity | |
| Operation | 5 to 85% |
| Storage | 5 to 95% |
| Transport | Max. 95% at 40°C |

Table 87: 8AC123.60-1 - Technical data

1) The AC123 is a single encoder module. It is also possible to insert multiple encoder modules. In this case, the encoder module in the slot with the lowest number is automatically used for motor feedback.
2) The power consumption of the plug-in module can be approximated using the following formula:
$P_{Module}$ [W] = $P_{Encoder}$ [W] . k + 0.6 W
The power consumed by the encoder $P_{Encoder}$ is calculated from the selected encoder supply voltage (5 V / 15 V) and the current required:
$P_{Encoder}$ [W] = $U_{Encoder}$ [V] . $I_{Encoder}$ [A]
The following values must be used for k:
k = 1.2 (for 15 V encoder supply)
k = 1.75 (for 5 V encoder supply)
3) The maximum cable length requires at least one 4x 2x 0.14 mm² + 2x 0.5 mm² cable. The sense lines must be used.

### 3.7.4 Status indicators

The UP/DN LEDs are lit depending on the rotational direction and the speed of the connected encoder.

UP LED ... Lit when the encoder position changes in the positive direction.
DN LED ... Lit when the encoder position changes in the negative direction.

The faster the encoder position changes, the brighter the respective LED is lit.

### 3.7.5 Firmware

The firmware is part of the operating system for the ACOPOS servo drives. Firmware is updated by updating the ACOPOS operating system.

### 3.7.6 Wiring

#### 3.7.6.1 Pinout

| Figure | X11 | Pin | Name | Function | |
|---|---|---|---|---|---|
| | | | | Incremental mode | SSI mode |
|   | 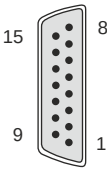  | 1 | A | Channel A | --- |
| | | 2 | A\ | Channel A inverted | --- |
| | | 3 | B | Channel B | --- |
| | | 4 | B\ | Channel B inverted | --- |
| | | 5 | RD | Reference pulse | Data input |
| | | 6 | RD\ | Reference pulse inverted | Data input inverted |
| | | 7 | T | --- | Clock output |
| | | 8 | T\ | --- | Clock output inverted |
| | | 9 | 5 V out / 0.35 A | Encoder power supply 5 V | |
| | | 10 | Sense 5 V | Sense 5 V | |
| | | 11 | Sense COM | Sense 0V | |
| | | 12 | COM (7 - 9, 13) | Encoder supply 0 V | |
| | | 13 | 15 V out / 0.35 A | Encoder power supply 15 V | |
| | | 14 | A1 | Activate encoder supply [1] | |
| | | 15 | A2 | Activate encoder supply [1] | |

Table 88: AC123 incremental encoder and SSI absolute encoder interface - Pinout

1) To activate the encoder supply, pins 14 and 15 must be connected in the encoder cable connector.
**Caution:** To read from SSI encoders, the encoder supply also has to be activated if the encoder is supplied externally!

## Danger!

**The connections for the encoders are isolated circuits. These connections are therefore only permitted to be connected to devices or components that have sufficient isolation in accordance with IEC 60364-4-41 or EN 61800-5-1.**

### 3.7.6.2 Input/Output circuit diagram

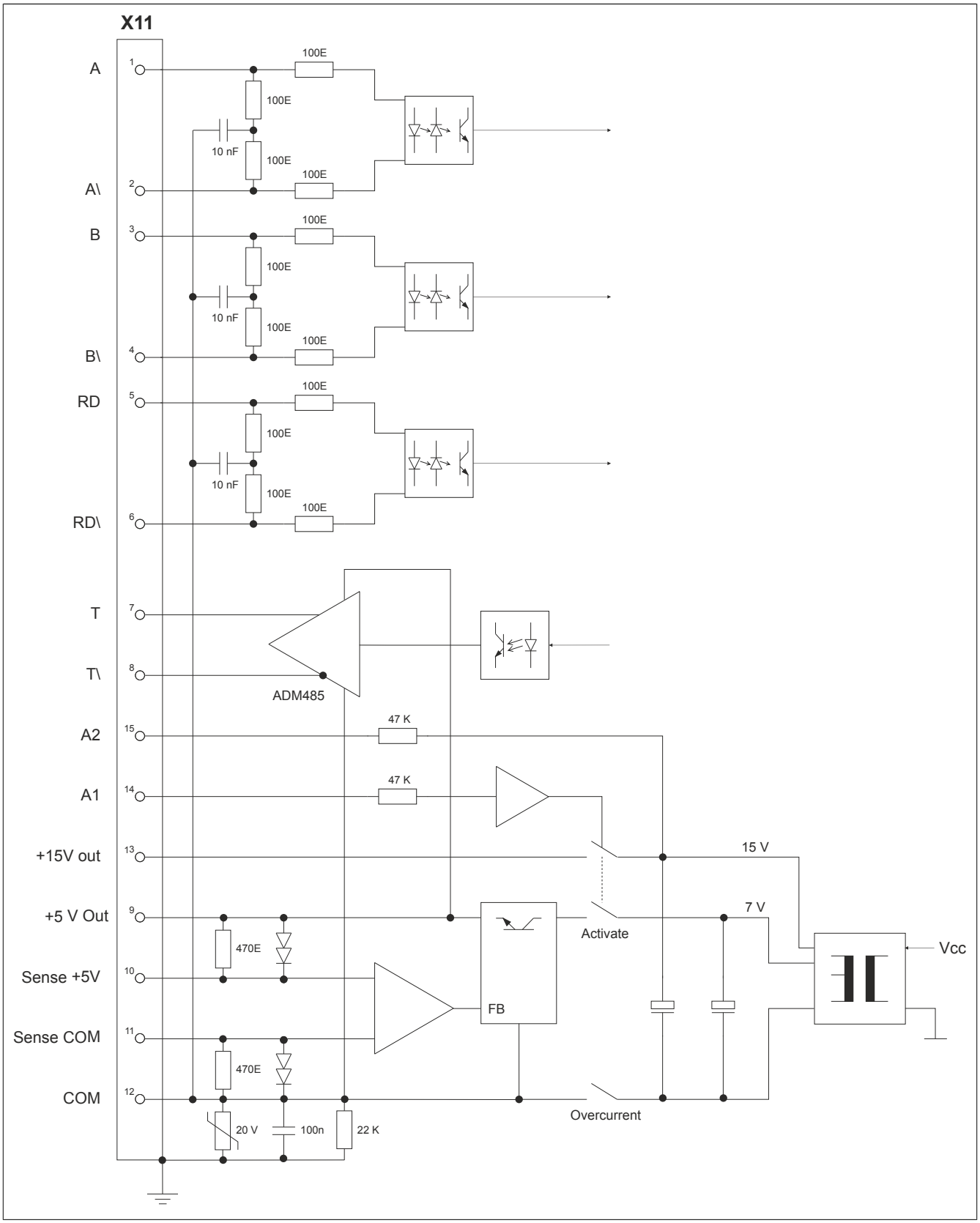


Figure 38: AC123 - Input/Output circuit diagram



Provided by Industrial Automation Co. • www.industrialautomationco.com • Parts & Repair: 877-727-8757

## 3.8 AC125 - BiSS encoder module

### 3.8.1 8AC125.60-1

#### 3.8.1.1 General information

The AC125 plug-in module contains a serial RS485 interface as well as an interface for evaluating sinusoidal output signals. Encoders with a supply voltage of 5 V can be connected.

The following functions and protocols can be selected by configuring the appropriate parameters (using a higher-level controller).

- BiSS (MODE C), serial
- SSI, serial
- SSI SinCos, serial with evaluation of sinusoidal output signals

This plug-in module can be used to evaluate encoders installed in B&R servo motors as well as encoders for external axes (encoders that scan any machine movement). The input signals are monitored. This makes it possible to detect open circuits, conductor faults and failures in the encoder power supply. [2)]

#### 3.8.1.2 Order data

| Model number | Short description | Figure |
|---|---|---|
| | **Plug-in modules** | |
| 8AC125.60-1 | ACOPOS plug-in module, BiSS/SSI SinCos/SSI interface |  |

Table 89: 8AC125.60-1 - Order data

#### 3.8.1.3 Technical data

| Model number | 8AC125.60-1 |
|---|---|
| **General information** | |
| Module type | ACOPOS plug-in module |
| B&R ID code | 0xACF3 |
| Slot [1)] | Slots 2, 3 and 4 |
| Power consumption | Max. 4.5 W |
| Certifications | |
| CE | Yes |
| UL | cULus E225616<br>Power conversion equipment |
| KC | Yes |
| **Encoder inputs [2)]** | |
| Quantity | 1 |
| Module-side connection | 15-pin female DSUB |
| Status indicators | UP/DN LEDs |
| Electrical isolation | |
| Encoder - ACOPOS | No |
| Encoder monitoring | Yes |
| Max. encoder cable length | 50 m [3)] |
| Encoder power supply | |
| Output voltage | Typ. 5 V |
| Load capacity | 250 mA [4)] |
| Sense lines | Yes |

Table 90: 8AC125.60-1 - Technical data

[2)] Not for SSI functionality.

| Model number | 8AC125.60-1 |
|---|---|
| Sine/Cosine inputs | |
| Signal transmission | Differential signals, symmetrical |
| Signal frequency (-3 dB) | DC up to 300 kHz |
| Signal frequency (-5 dB) | DC up to 400 kHz |
| Differential voltage | 0.5 to 1.25 $V_{SS}$ |
| Common-mode voltage | Max. ±7 V |
| Terminating resistor | 120 Ω |
| Resolution [5] | 16384 * Number of encoder lines |
| Accuracy [6] | - |
| Reference input | |
| Signal transmission | Differential signal, symmetrical |
| Differential voltage for low | ≤-0.2 V |
| Differential voltage for high | ≥+0.2 V |
| Common-mode voltage | Max. ±7 V |
| Terminating resistor | 120 Ω |
| Serial interface | |
| Signal transmission | Synchronous |
| Protocol | RS485 |
| Baud rate | Depends on the configured functionality |
| **Ambient conditions** | |
| Temperature | |
| Operation | |
| Nominal | 5 to 40°C |
| Maximum | 55°C |
| Storage | -25 to 55°C |
| Transport | -25 to 70°C |
| Relative humidity | |
| Operation | 5 to 85% |
| Storage | 5 to 95% |
| Transport | Max. 95% at 40°C |

Table 90: 8AC125.60-1 - Technical data

1) The AC125 is an encoder module. It is also possible to connect multiple encoder modules. In this case, the encoder module in the smallest slot automatically serves as motor feedback.
2) The encoder must be wired with a shielded cable.
3) Requirement: Wiring of the encoder takes place with a shielded cable with a wire cross section of min. 0.14 mm² for all signal lines and a wire cross section of min. 0.5 mm² for all encoder power supply lines.
4) The value refers only to the encoder. The actual load capacity of the encoder power supply is approx. 300 mA. The difference of approx. 50 mA covers the consumption of the always-existing terminating resistors. For longer encoder cables, it is important to ensure that the voltage drop on the supply wires (back and forth) is not permitted to exceed 1.45 V. This can reduce the permissible load current.
5) Depending on the resolution of the connected encoder, only part of this resolution can be used in practice. In addition, the usable resolution can be reduced by signal noise of the connected encoder.
6) In practice, the accuracy is limited by the encoder.

### 3.8.1.4 Wiring

#### 3.8.1.4.1 Pinout

| Figure | X11 | Pin | Name | Function | | |
|---|---|---|---|---|---|---|
| | | | | BiSS | SSI | SSI SinCos |
|   | 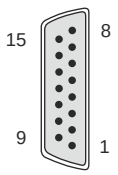  | 1 | A | --- | | Channel A |
| | | 2 | COM (1, 3 - 9, 11, 13 - 15) | Encoder supply 0 V | | |
| | | 3 | B | --- | | Channel B |
| | | 4 | 5 V out / 0.25 A | Encoder power supply 5 V | | |
| | | 5 | D | Data input | | |
| | | 6 | --- | --- | | |
| | | 7 | R\ | Reference pulse inverted | | |
| | | 8 | T | Clock output | | |
| | | 9 | A\ | --- | | Channel A inverted |
| | | 10 | Sense - | Sense - | | |
| | | 11 | B\ | --- | | Channel B inverted |
| | | 12 | Sense + | Sense + | | |
| | | 13 | D\ | Data inverted | | |
| | | 14 | R | Reference pulse | | |
| | | 15 | T\ | Clock output inverted | | |

Table 91: AC125 pinout



Provided by Industrial Automation Co. • www.industrialautomationco.com • Parts & Repair: 877-727-8757

## Danger!

**The connections for the encoders are isolated circuits. These connections are therefore only permitted to be connected to devices or components that have sufficient isolation in accordance with IEC 60364-4-41 or EN 61800-5-1.**





Provided by Industrial Automation Co. • www.industrialautomationco.com • Parts & Repair: 877-727-8757

## 3.8.2 8AC125.60-2

### 3.8.2.1 General information

The AC125 plug-in module has a BiSS encoder interface (MODE C) with a baud rate of 6.25 Mbit/s. BiSS encoders with a supply voltage of 5 V can be connected.

This plug-in module can be used to evaluate encoders installed in B&R servo motors as well as encoders for external axes (encoders that scan any machine movement). The input signals are monitored. This makes it possible to detect open or shorted lines as well as encoder supply failures.

### 3.8.2.2 Order data

| Model number | Short description | Figure |
|---|---|---|
| | **Plug-in modules** | |
| 8AC125.60-2 | ACOPOS plug-in module, BiSS encoder interface 5 V, baud rate 6.25 Mbit/s |  |

Table 92: 8AC125.60-2 - Order data

### 3.8.2.3 Technical data

| Model number | 8AC125.60-2 |
|---|---|
| **General information** | |
| Module type | ACOPOS plug-in module |
| B&R ID code | 0xBD5A |
| Slot [1] | Slots 2, 3 and 4 |
| Max. power consumption | 2.2 W |
| Certifications | |
| CE | Yes |
| UL | cULus E225616<br>Power conversion equipment |
| KC | Yes |
| **Encoder connection [2]** | |
| Module-side connection | 9-pin female DSUB |
| Status indicators | UP/DN LEDs |
| Electrical isolation | |
| Encoder - ACOPOS | No |
| Encoder monitoring | Yes |
| Max. encoder cable length | 100 m<br>Depends on the cross section of the power supply wires of the encoder cable [3] |
| **Encoder power supply** | |
| Output voltage | 5 V ... 5.25 V |
| Load capacity | 350 mA |
| Protective measures | |
| Overload-proof | Yes |
| Short-circuit proof | Yes |
| **Synchronous serial interface** | |
| Signal transmission | RS485 |
| Baud rate | 6.25 Mbit/s |
| **Ambient conditions** | |
| Temperature | |
| Operation | |
| Nominal | 5 to 40°C |
| Maximum | 55°C |
| Storage | -25 to 55°C |
| Transport | -25 to 70°C |

Table 93: 8AC125.60-2 - Technical data

| Model number | 8AC125.60-2 |
|---|---|
| Relative humidity | |
| Operation | 5 to 85% |
| Storage | 5 to 95% |
| Transport | Max. 95% at 40°C |

Table 93: 8AC125.60-2 - Technical data

1) The AC125 is an encoder module. It is also possible to connect multiple encoder modules. In this case, the encoder module in the smallest slot automatically serves as motor feedback.
2) Only B&R 8BCF EnDat 2.2 cables are permitted to be used for wiring the module.
3) Maximum encoder cable length $I_{max}$ can be calculated as follows (the maximum permissible encoder cable length of 100 m is not permitted to be exceeded):

$I_{max} = 0.5 * (5.0 - U_{Gmin}) * A / [(I_G + 0.03) * \rho]$

$U_{Gmin}$ ... Minimum permissible supply voltage of the encoder
$I_G$ ... Max. current consumption of the encoder [A]
A ... Cross section of the power supply wires [mm²]
ρ ... Specific resistance [Ωmm²/m] (e.g. for copper: ρ = 0.0178)



### 3.8.2.4 Wiring

#### 3.8.2.4.1 Pinout

| Figure | X11 | Pin | Name | Function |
|---|---|---|---|---|
|   | 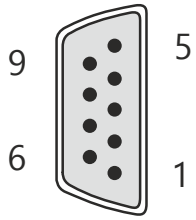  | 1 | U+ | Encoder power supply 5 V |
| | | 2 | --- | --- |
| | | 3 | --- | --- |
| | | 4 | D | Data input / output |
| | | 5 | T | Clock output |
| | | 6 | COM (1) | 0 V encoder supply |
| | | 7 | --- | --- |
| | | 8 | D\ | Data input / output inverted |
| | | 9 | T\ | Clock output inverted |

Table 94: BiSS encoder interface 8AC125.60-2 - Pinout

## Danger!

**The connections for the encoders are isolated circuits. These connections are therefore only permitted to be connected to devices or components that have sufficient isolation per IEC 60364-4-41 or EN 61800-5-1.**



Provided by Industrial Automation Co. • www.industrialautomationco.com • Parts & Repair: 877-727-8757

### 3.8.2.4.2 Input/Output circuit diagram

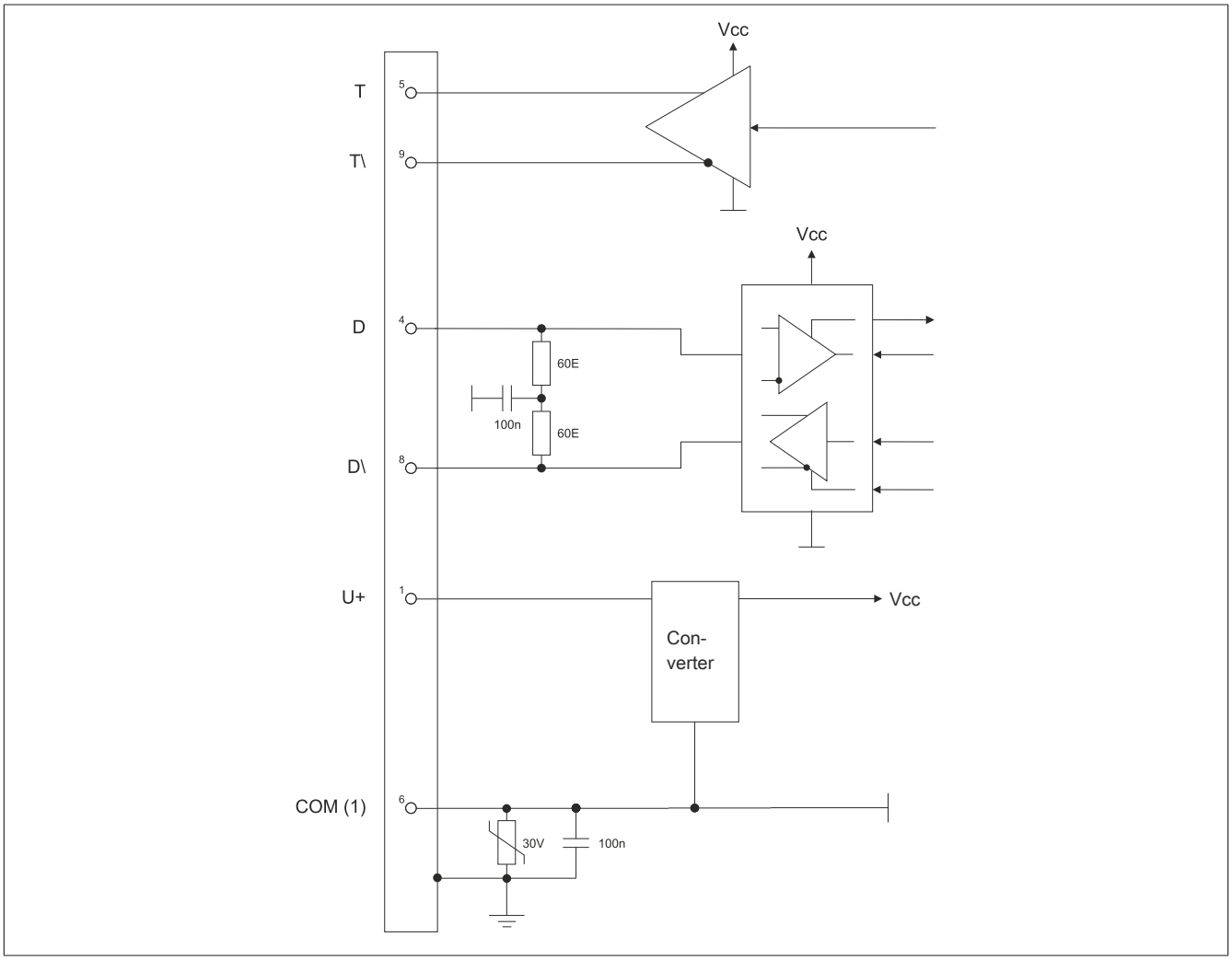


Figure 39: BISS encoder interface 8AC125.60-2 Input/Output circuit diagram



Provided by Industrial Automation Co. • www.industrialautomationco.com • Parts & Repair: 877-727-8757

### 3.8.3 8AC125.61-2

#### 3.8.3.1 General information

The AC125 plug-in module can be used in an ACOPOS slot. The module has a BISS encoder interface (MODE C) with a baudrate of 6.25 MBit/s. BiSS encoders with a supply voltage of 12 V can be connected.

This module can be used to evaluate encoders which are built into B&R servo motors and also encoders for external axes (encoders that evaluate any machine movement). The input signals are monitored. In this way, broken connections, shorted lines and encoder supply failure can be recognized.

#### 3.8.3.2 Order data

| Model number | Short description | Figure |
|---|---|---|
| | **Plug-in modules** | |
| 8AC125.61-2 | ACOPOS plug-in module, BiSS encoder interface 12 V, baud rate 6.25 Mbit/s |  |

Table 95: 8AC125.61-2 - Order data

#### 3.8.3.3 Technische Daten

| Model number | 8AC125.61-2 |
|---|---|
| **General information** | |
| Module type | ACOPOS plug-in module |
| B&R ID code | 0xBD5A |
| Slot [1] | Slots 2, 3 and 4 |
| Max. power consumption | 5.8 W |
| Certifications | |
| CE | Yes |
| UL | cULus E225616<br>Power conversion equipment |
| KC | Yes |
| **Encoder connection [2]** | |
| Module-side connection | 9-pin female DSUB |
| Status indicators | UP/DN LEDs |
| Electrical isolation | |
| Encoder - ACOPOS | No |
| Encoder monitoring | Yes |
| Max. encoder cable length | 100m<br>Depends on the cross section of the power supply wires of the encoder cable [3] |
| **Encoder power supply** | |
| Output voltage | Typ. 12 V |
| Load capacity | 350 mA |
| Protective measures | |
| Overload-proof | Yes |
| Short-circuit proof | Yes |
| **Synchronous serial interface** | |
| Signal transmission | RS485 |
| Baud rate | 6.25 Mbit/s |
| **Ambient conditions** | |
| Temperature | |
| Operation | |
| Nominal | 5 to 40°C |
| Maximum | 55°C |
| Storage | -25 to 55°C |
| Transport | -25 to 70°C |

Table 96: 8AC125.61-2 - Technical data

| Model number | 8AC125.61-2 |
|---|---|
| Relative humidity | |
| Operation | 5 to 85% |
| Storage | 5 to 95% |
| Transport | Max. 95% at 40°C |

Table 96: 8AC125.61-2 - Technical data

1) The AC125 is an encoder module. It is also possible to connect multiple encoder modules. In this case, the encoder module in the smallest slot automatically serves as motor feedback.
2) Only B&R 8BCF EnDat 2.2 cables are permitted to be used for wiring the module.
3) Maximum encoder cable length $l_{max}$ can be calculated as follows (the maximum permissible encoder cable length of 100 m is not permitted to be exceeded):

$l_{max} = 2.5 * A / [(I_G + 0.03) * \rho]$

$I_G$ ... Max. current consumption of the encoder [A]
A ... Cross section of the power supply wires [mm²]
ρ ... Specific resistance [Ωmm²/m] (e.g. for copper: ρ = 0.0178)

### 3.8.3.4 Wiring

### 3.8.3.4.1 Pinout

| Figure | X11 | Pin | Name | Function |
|---|---|---|---|---|
|   | 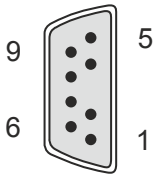  | 1 | U+ | Encoder power supply 12 V |
| | | 2 | --- | --- |
| | | 3 | --- | Coding |
| | | 4 | D | Data input/output |
| | | 5 | T | Clock output |
| | | 6 | COM (1) | Encoder supply 0 V |
| | | 7 | --- | --- |
| | | 8 | D\ | Data input/output inverted |
| | | 9 | T\ | Clock output inverted |

Table 97: 8AC125.61-2 BiSS encoder interface - Pinout

## Danger!

**The connections for the encoders are isolated circuits. These connections are therefore only permitted to be connected to devices or components that have sufficient isolation per IEC 60364-4-41 or EN 61800-5-1.**



Provided by Industrial Automation Co. • www.industrialautomationco.com • Parts & Repair: 877-727-8757

### 3.8.3.4.2 Input/output circuit diagram

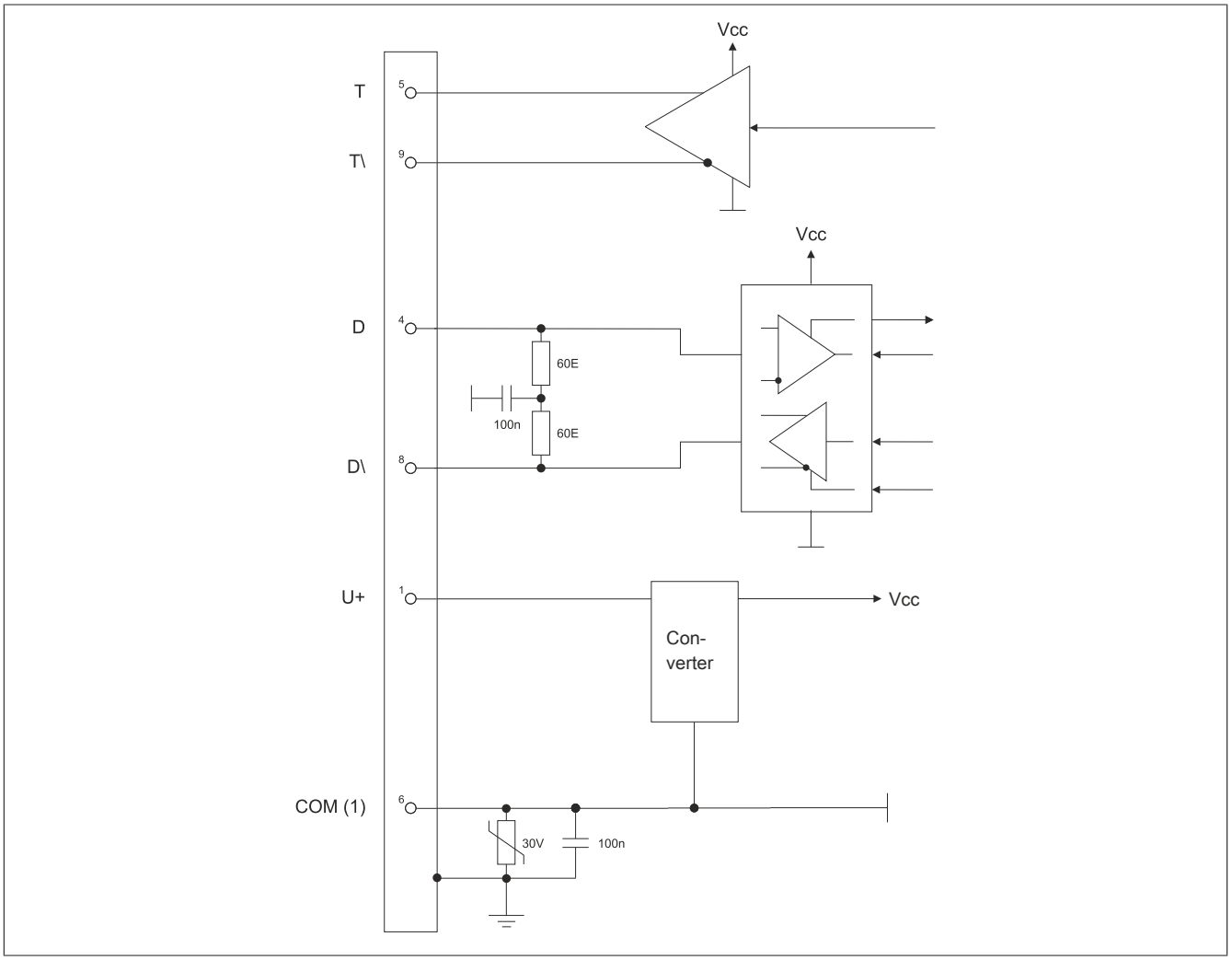


Figure 40: BISS encoder interface 8AC125.61-2 Input/Output circuit diagram

### 3.8.4 Status indicators

The UP/DN LEDs are lit depending on the rotational direction and the speed of the connected encoder.

UP LED ... Lit when the encoder position changes in the positive direction.
DN LED ... Lit when the encoder position changes in the negative direction.

The faster the encoder position changes, the brighter the respective LED is lit.

### 3.8.5 Firmware

The firmware is part of the operating system for the ACOPOS servo drives. Firmware is updated by updating the ACOPOS operating system.

## 3.9 AC126 - EnDat 2.2 module

### 3.9.1 General information

The AC126 plug-in module is equipped with an EnDat 2.2 encoder interface. This module can be used to evaluate encoders installed in B&R servo motor motors as well as encoders for external axes (encoders that sample any machine movement). The input signals are monitored. This makes it possible to detect open or shorted lines as well as encoder supply failures.

During startup, the plug-in module is automatically identified, configured and its parameters set by the ACOPOS servo drive operating system.

#### EnDat 2.2 encoder

EnDat 2.2 is a standard developed by Johannes Heidenhain GmbH (www.heidenhain.de) and is used in applications that demand high resolution and precision. Position data is transferred digitally via the serial port. With no analog signals, the number of cable conductors is reduced. EnDat 2.2 encoders also provide internal read/write parameter memory.

With absolute position measurement (the absolute position is sampled serially), a homing procedure for referencing is usually not required. Where necessary, a multi-turn encoder (4096 revolutions) should be installed. To save costs, a single-turn encoder and a reference switch can also be used. In this case, a homing procedure must be carried out.

The parameter memory in the encoder is used by B&R to store motor data (among other things). In this way, the ACOPOS drive system is always automatically provided the correct motor parameters and limit values. This parameter memory is referred to as the "embedded parameter chip".

#### EnDat 2.2 encoders with battery-backed multi-turn function:

When equipped with the optional 8AXB000.0000-0 battery module, the module also supports encoders with battery-backed multi-turn functionality. These are gearless multi-turn encoders that would lose position data in the event of a power failure. The battery voltage is automatically monitored by the encoder itself.

### 3.9.2 Order data

| Model number | Short description | Figure |
|---|---|---|
| | **Plug-in modules** |  |
| 8AC126.60-1 | ACOPOS plug-in module, EnDat 2.2 encoder interface | |
| | **Required accessories** | |
| | **EnDat 2.2 cables** | |
| 8BCF0005.1221B-0 | EnDat 2.2 cable, length 5 m, 4x 0.14 mm² + 4x 0.35 mm², 12-pin female springtec EnDat connector, 9-pin male DSUB servo connector, can be used in cable drag chains | |
| 8BCF0007.1221B-0 | EnDat 2.2 cable, length 7 m, 4x 0.14 mm² + 4x 0.35 mm², 12-pin female springtec EnDat connector, 9-pin male DSUB servo connector, can be used in cable drag chains | |
| 8BCF0010.1221B-0 | EnDat 2.2 cable, length 10 m, 4x 0.14 mm² + 4x 0.35 mm², 12-pin female springtec EnDat connector, 9-pin male DSUB servo connector, can be used in cable drag chains | |
| 8BCF0015.1221B-0 | EnDat 2.2 cable, length 15 m, 4x 0.14 mm² + 4x 0.35 mm², 12-pin female springtec EnDat connector, 9-pin male DSUB servo connector, can be used in cable drag chains | |
| 8BCF0020.1221B-0 | EnDat 2.2 cable, length 20 m, 4x 0.14 mm² + 4x 0.35 mm², 12-pin female springtec EnDat connector, 9-pin male DSUB servo connector, can be used in cable drag chains | |
| 8BCF0025.1221B-0 | EnDat 2.2 cable, length 25 m, 4x 0.14 mm² + 4x 0.35 mm², 12-pin female springtec EnDat connector, 9-pin male DSUB servo connector, can be used in cable drag chains | |
| | **Optional accessories** | |
| | **Battery Modules** | |
| 8AXB000.0000-00 | 8AC126.60-1 accessory set for encoder buffering consisting of: Battery module with 3.6 V lithium battery | |

Table 98: 8AC126.60-1 - Order data

## Advice:

**Both 8BCF EnDat 2.2 cables and 8CH hybrid motor cables can be used for wiring the module.**

### 3.9.3 Technical data

| Model number | 8AC126.60-1 |
|---|---|
| **General information** | |
| Module type | ACOPOS plug-in module |
| B&R ID code | 0xBD5A |
| Slot [1] | Slots 2, 3 and 4 |
| Max. power consumption | 4.4 W |
| Certifications | |
| CE | Yes |
| UL | cULus E225616<br>Power conversion equipment |
| KC | Yes |
| **Encoder connection [2]** | |
| Module-side connection | 9-pin female DSUB |
| Status indicators | UP/DN LEDs, BAT LED |
| Electrical isolation | |
| Encoder - ACOPOS | No |
| Encoder monitoring | Yes |
| Max. encoder cable length | 100 m<br>Depends on the cross section of the power supply wires of the encoder cable [3] |
| **Encoder power supply** | |
| Output voltage | Typ. 12 V |
| Load capacity | 300 mA [4] |
| Protective measures | |
| Overload-proof | Yes |
| Short-circuit proof | Yes |
| **Synchronous serial interface** | |
| Signal transmission | RS485 |
| Baud rate | 6.25 Mbit/s |
| **Ambient conditions** | |
| Temperature | |
| Operation | |
| Nominal | 5 to 40°C |
| Maximum | 55°C |
| Storage | -25 to 55°C |
| Transport | -25 to 70°C |
| Relative humidity | |
| Operation | 5 to 85% |
| Storage | 5 to 95% |
| Transport | Max. 95% at 40°C |

Table 99: 8AC126.60-1 - Technical data

1) The AC126 is an encoder module. It is also possible to connect multiple encoder modules. In this case, the encoder module in the smallest slot automatically serves as motor feedback.
2) Only B&R 8BCF EnDat 2.2 cables are permitted to be used for wiring the module.
3) Maximum encoder cable length $l_{max}$ can be calculated as follows (the maximum permissible encoder cable length of 100 m is not permitted to be exceeded):

$$l_{max} = 2.5 * A / [(I_G + 0.03) * \rho]$$

$I_G$ ... Max. current consumption of the encoder [A]
A ... Cross section of the power supply wires [mm²]
ρ ... Specific resistance [Ωmm²/m] (e.g. for copper: ρ = 0.0178)

4) An additional reserve is available for the terminating resistors.

### 3.9.4 Status indicators

#### UP/DN LEDs

The UP/DN LEDs are lit depending on the rotational direction and the speed of the connected encoder.

UP LED ... Lit when the encoder position changes in the positive direction.
DN LED ... Lit when the encoder position changes in the negative direction.

The faster the encoder position changes, the brighter the respective LED is lit.

#### BAT LED

The BAT LED is used to monitor the backup battery on the optional battery module 8AXB000.0000-00.

| Color | Description | |
|---|---|---|
| Green/Red | Green (lit) | Backup pattery voltage OK |
| | Red (lit) | Backup battery voltage too low or line break |
| | LED not lit | No encoder with battery-backed multi-turn functionality connected to module |

Table 100: BAT Status LED - AC126

### 3.9.5 Firmware

The firmware is part of the operating system for the ACOPOS servo drives. Firmware is updated by updating the ACOPOS operating system.

### 3.9.6 Wiring

#### 3.9.6.1 Pinout

| Figure | X11 | Pin | Name | Function |
|---|---|---|---|---|
|  | 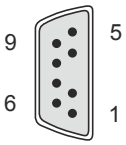 | 1 | U+ | Encoder power supply 12 V |
| | | 2 | VBATT | Battery output 3.6 V |
| | | 3 | --- | Keying |
| | | 4 | D | Data input / output |
| | | 5 | T | Clock output |
| | | 6 | COM (1) | Encoder supply 0 V |
| | | 7 | COM (2) | Battery output 0 V |
| | | 8 | D\ | Data input / output inverted |
| | | 9 | T\ | Clock output inverted |

Table 101: AC126 EnDat 2.2 interface - Pinout

## Danger!

**The connections for the encoders are isolated circuits. These connections are therefore only permitted to be connected to devices or components that have sufficient isolation per IEC 60364-4-41 or EN 61800-5-1.**

## Information:

**If an encoder with battery-backed multi-turn functionality is to be connected, pins 2 and 7 must be wired to the encoder and a 8AXB000.0000-00 battery module must be used.**

## Information:

**Only 8BCF EnDat 2.2 cables from B&R may be used to connect the module.**

## 3.10 AC130 - Digital mixed module

### 3.10.1 General information

The AC130 plug-in module makes a maximum of 8 digital inputs or 10 digital outputs available.

I/O points can be configured in pairs as inputs or outputs. The first three inputs have incremental encoder functionality (A, B, R).

The inputs are divided into 4 standard (max. 10 kHz) and 4 high speed (max. 100 kHz) inputs.

The outputs include 4 high speed (push-pull) outputs with a maximum current of 100 mA, 4 standard (high-side) outputs with a maximum current of 400 mA and 2 low speed (high-side) outputs with a maximum current of 2 A. All outputs can be read.

### 3.10.2 Order data

| Model number | Short description | Figure |
|---|---|---|
| | **Plug-in modules** |  |
| 8AC130.60-1 | ACOPOS plug-in module, 8 digital I/O configurable in pairs as 24 V input or as output 400/100 mA, 2 digital outputs 2 A, order TB712 terminal block separately | |
| | **Required accessories** | |
| | **Terminal blocks** | |
| 7TB712.9 | Accessory terminal block, 12-pin, screw clamps 1.5 mm² | |
| 7TB712.91 | Accessory terminal block, 12-pin, cage clamp terminal block 1.5 mm² | |
| | **Optional accessories** | |
| 7TB712:90-02 | 2003 B&R terminal block, 12 pin 20 pieces, screw clamp | |
| 7TB712:91-02 | 2003 B&R terminal block, 12 pin 20 pieces, cage clamp | |

Table 102: 8AC130.60-1 - Order data

### 3.10.3 Technical data

| Model number | 8AC130.60-1 |
|---|---|
| **General information** | |
| Module type | ACOPOS plug-in module |
| B&R ID code | 0x1068 |
| Slot [1)] | Slots 3 and 4 |
| Power consumption | Max. 0.8 W |
| Certifications | |
| CE | Yes |
| UL | cULus E225616<br>Power conversion equipment |
| KC | Yes |
| **Inputs/Outputs** | |
| Module-side connection | 12-pin connector |
| Status indicators | Status LED (24 V) |
| Configuration of digital inputs/outputs | Configurable in pairs as inputs or outputs |
| **Incremental encoders** | |
| Counter size | 16-bit |
| Input frequency | Max. 62.5 kHz |
| Evaluation | 4x |
| Signal form | Square wave pulse |
| Encoder monitoring | No |
| Counter frequency | Max. 250 kHz |
| Reference frequency | Max. 62.5 kHz |
| Distance between edges | Min. 2.5 µs |
| Inputs | |
| Input 1 | Channel A |
| Input 2 | Channel B |
| Input 3 | Reference pulse R |
| **Power supply** | |
| Voltage monitoring (24 V - LED) | Yes, supply voltage >18 V |
| Reverse polarity protection | Yes |

Table 103: 8AC130.60-1 - Technical data

| Model number | 8AC130.60-1 |
|---|---|
| Power supply | |
| Minimum | 18 VDC |
| Nominal | 24 VDC |
| Maximum | 30 VDC |
| **Digital inputs** [2] | |
| Quantity | Max. 8 |
| Circuit | Sink |
| Switching threshold | |
| Low | <5 V |
| High | >15 V |
| Input voltage | |
| Nominal | 24 VDC |
| Maximum | 30 VDC |
| Input current at nominal voltage | |
| Channel 1-4 | Approx. 10 mA |
| Channel 5-8 | Approx. 5.5 mA |
| Electrical isolation | |
| Channel - ACOPOS | Yes |
| Channel - Channel | No |
| Switching delay | |
| Channel 1-4 | Max. 5 µs |
| Channel 5-8 | Max. 35 µs |
| **Event counters** | |
| Signal form | Square wave pulse |
| Input frequency | Max. 100 kHz |
| Counter size | 16-bit |
| Inputs | |
| Input 1 | Counter 1 |
| Input 2 | Counter 2 |
| **Digital outputs** | |
| Quantity | Max. 10 |
| Readable outputs | Yes |
| Continuous current | |
| Outputs 1 - 4 | Max. 100 mA |
| Outputs 5 - 8 | Max. 400 mA |
| Outputs 9 - 10 | Max. 2 A |
| Short-circuit current at 24 V (until cutoff) | |
| Outputs 1 - 4 | Approx. 1 A |
| Outputs 5 - 8 | Approx. 1.2 A |
| Outputs 9 - 10 | Approx. 24 A |
| Electrical isolation | |
| Output - ACOPOS | Yes |
| Output - Output | No |
| Switching frequency (resistive load) | |
| Outputs 1 - 2 | Max. 10 kHz [3] |
| Outputs 3 - 4 | Max. 10 kHz [3] |
| Outputs 5 - 8 | Max. 5 kHz |
| Outputs 9 - 10 | Max. 100 Hz |
| Switching voltage | |
| Minimum | 18 VDC |
| Nominal | 24 VDC |
| Maximum | 30 VDC |
| Switching delay 0 → 1 and 1 → 0 | |
| Outputs 1 - 4 | Max. 5 µs |
| Outputs 5 - 8 | Max. 50 µs |
| Outputs 9 - 10 | Max. 500 µs |
| Protection | |
| Short-circuit proof | Yes |
| Overload-proof | Yes |
| Type | |
| Outputs 1 - 4 | Transistor outputs push-pull |
| Outputs 5 - 10 | High-side transistor outputs |
| **Ambient conditions** | |
| Temperature | |
| Operation | |
| Nominal | 5 to 40°C |
| Maximum | 55°C |
| Storage | -25 to 55°C |
| Transport | -25 to 70°C |

Table 103: 8AC130.60-1 - Technical data



Provided by Industrial Automation Co. • www.industrialautomationco.com • Parts & Repair: 877-727-8757

| Model number | 8AC130.60-1 |
|---|---|
| Relative humidity | |
| Operation | 5 to 85% |
| Storage | 5 to 95% |
| Transport | Max. 95% at 40°C |

Table 103: 8AC130.60-1 - Technical data

1) The AC130 can also be used as an encoder module. It is also possible to insert multiple encoder modules. In this case, the encoder module in the slot with the lowest number is automatically used for motor feedback.
2) Shielded cables must be used for inputs 1 - 4.
3) Encoder emulation mode: Max. 65 kHz.



### 3.10.4 Status indicators

### AC130 LED status indicators

| Label | Color | Function | Description | |
|---|---|---|---|---|
| 24 V | Green | Status | LED off | Supply voltage on pin 11 and pin 12 of the module accounts for less than 18 VDC |
| | | | LED is lit | Supply voltage on pin 11 and pin 12 of the module accounts for more than 18 VDC |
| | | | LED is blinking 1) | Module error:<br>• ACOPOS network error<br>• Overvoltage on digital O 9 and/or digital O 10<br>• One or more I/O drives are defective<br>• Incremental encoder emulation mode: Frequency too high |

Table 104: LED status 8AC130

1) The LED blinks if supply voltage on pin 11 and pin 12 of the module accounts for more than 18 VDC.

### 3.10.5 Firmware

The firmware is part of the operating system for the ACOPOS servo drives. Firmware is updated by updating the ACOPOS operating system.

### 3.10.6 Wiring

### 3.10.6.1 Pinout

| Figure | X11 | Pin | Name | Function |
|---|---|---|---|---|
|  | 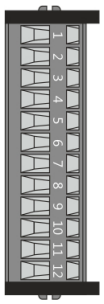 | 1 | Digital I/O 1 | Digital input/output 1 |
| | | 2 | Digital I/O 2 | Digital input/output 2 |
| | | 3 | Digital I/O 3 | Digital input/output 3 |
| | | 4 | Digital I/O 4 | Digital input/output 4 |
| | | 5 | Digital I/O 5 | Digital input/output 5 |
| | | 6 | Digital I/O 6 | Digital input/output 6 |
| | | 7 | Digital I/O 7 | Digital input/output 7 |
| | | 8 | Digital I/O 8 | Digital input/output 8 |
| | | 9 | Digital O 9 | Digital output 9 |
| | | 10 | Digital O 10 | Digital output 10 |
| | | 11 | +24 V | +24 V supply |
| | | 12 | COM (1 - 11) | 0 V supply |

| Terminal cross sections | [mm²] | [AWG] |
|---|---|---|
| Solid core / multiple-conductor lines | 0.5 - 1.5 | 20 - 14 |
| Flexible, multiple wire line<br>Without wire end sleeves<br>With wire end sleeves | <br>0.5 - 1.5<br>0.5 - 1.5 | <br>20 - 14<br>20 - 14 |
| Approbation Data (UL/C-UL-US- and CSA)<br>UL/C-UL-US<br>CSA | <br>---<br>--- | <br>26 - 14<br>26 - 14 |
| Tightening torque for the terminal screws [Nm] | 0.2 ... 0.25 | |

Table 105: AC130 digital mixed module - Pinout

## Danger!

**The digital inputs are isolated circuits. Therefore, these connections are only allowed to be connected to devices or components with at least safe isolation in accordance with IEC 60364-4-41 or EN 61800-5-1.**

### 3.10.6.2 Input/Output circuit diagram

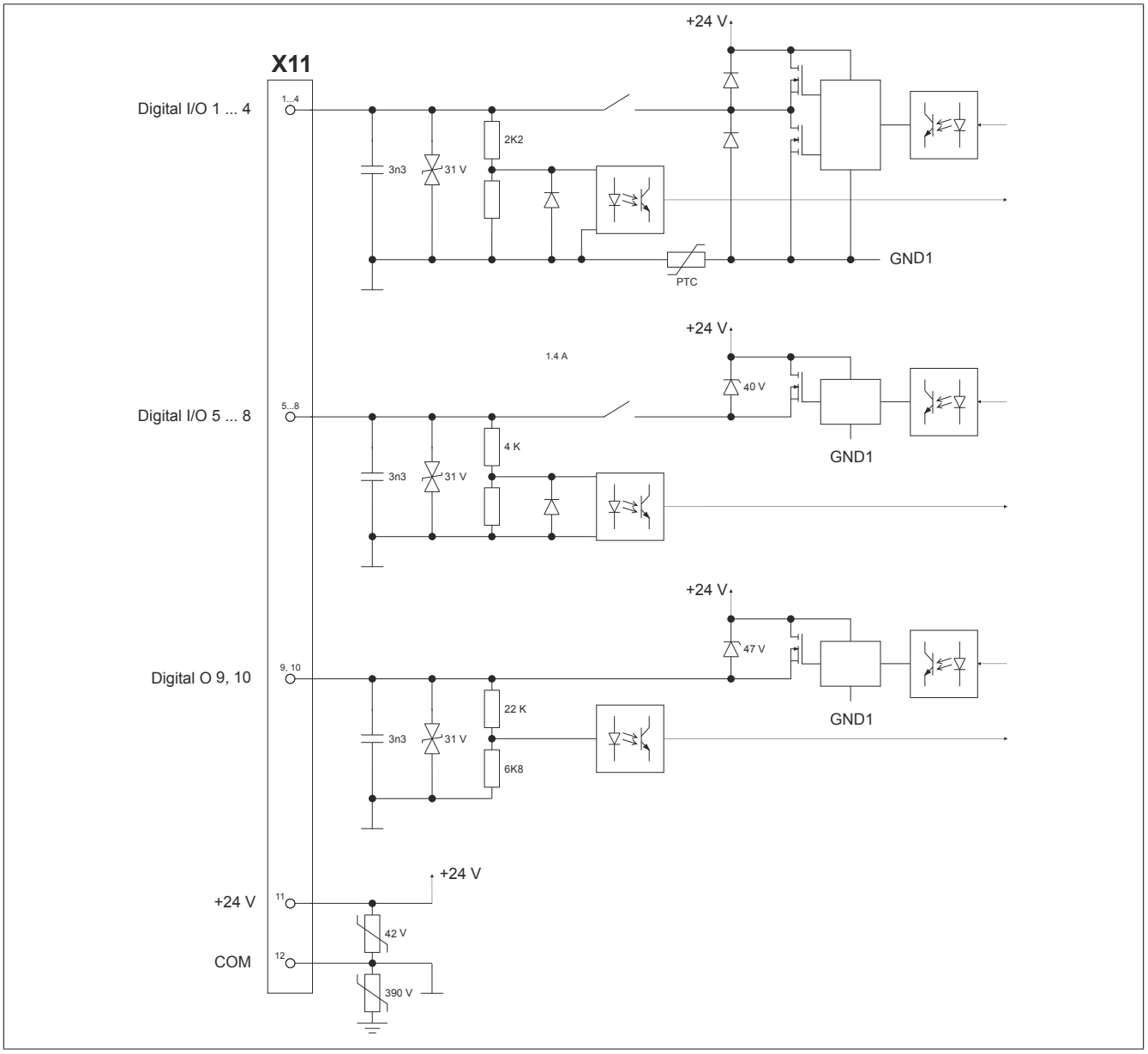


Figure 41: AC130 - Input/Output circuit diagram



Provided by Industrial Automation Co. • www.industrialautomationco.com • Parts & Repair: 877-727-8757

## 3.11 AC131 - Mixed module

### 3.11.1 General information

The AC131 plug-in module provides a maximum of 2 analog inputs (±10 V differential inputs or single-ended inputs) and 2 digital inputs or digital outputs.

The analog inputs have a resolution of 12 bits and are scanned synchronously using the 50 µs clock for the ACOPOS servo drive. The analog inputs have a 10 kHz analog input filter (3rd order low pass).

The digital inputs and outputs can be configured individually as input or output. The digital inputs are equipped with a counter function. The digital outputs (push-pull) can be read.

### 3.11.2 Order data

| Model number | Short description | Figure |
|---|---|---|
| | **Plug-in modules** |  |
| 8AC131.60-1 | ACOPOS plug-in module, 2 analog inputs ±10 V, 2 digital I/Os configurable as 24 V input or output 45 mA, order terminal block TB712 separately! | |
| | **Required accessories** | |
| | **Terminal blocks** | |
| 7TB712.9 | Accessory terminal block, 12-pin, screw clamps 1.5 mm² | |
| 7TB712.91 | Accessory terminal block, 12-pin, cage clamp terminal block 1.5 mm² | |
| | **Optional accessories** | |
| 7TB712:90-02 | 2003 B&R terminal block, 12 pin 20 pieces, screw clamp | |
| 7TB712:91-02 | 2003 B&R terminal block, 12 pin 20 pieces, cage clamp | |

Table 106: 8AC131.60-1 - Order data

### 3.11.3 Technical data

| Model number | 8AC131.60-1 |
|---|---|
| **General information** | |
| Module type | ACOPOS plug-in module |
| B&R ID code | 0x11E9 |
| Slot | Slots 2, 3 and 4 |
| Power consumption | Max. 1 W |
| Certifications | |
| CE | Yes |
| UL | cULus E225616<br>Power conversion equipment |
| KC | Yes |
| **Inputs/Outputs** | |
| Module-side connection | 12-pin multipoint connector |
| Status indicators | 24 V LED |
| Configuration of digital inputs/outputs | Individually configurable as digital input or output |
| **Power supply** | |
| Voltage monitoring (24 V - LED) | Yes, supply voltage >18 V |
| Reverse polarity protection | Yes |
| Power supply | |
| Minimum | 18 VDC |
| Nominal | 24 VDC |
| Maximum | 30 VDC |
| **Digital inputs** | |
| Quantity | Max. 2 |
| Modulation compared to ground potential | Max. ±50 V |
| Circuit | Sink |
| Input current at nominal voltage | Approx. 8 mA |
| Switching threshold | |
| Low | <5 V |
| High | >15 V |
| Input voltage | |
| Nominal | 24 VDC |
| Maximum | 30 VDC |

Table 107: 8AC131.60-1 - Technical data

| Model number | 8AC131.60-1 |
|---|---|
| Electrical isolation | |
| Channel - ACOPOS | Yes |
| Channel - Channel | No |
| Switching delay | |
| Counter | Max. 5 µs |
| Digital input | Max. 55 µs (digitally filtered) |
| **Event counters** | |
| Signal form | Square wave pulse |
| Input frequency | Max. 100 kHz |
| Counter size | 16-bit |
| Inputs | |
| Input 1 | Counter 1 |
| Input 2 | Counter 2 |
| **Analog inputs** | |
| Quantity | 2 |
| Digital converter resolution | 12-bit |
| Conversion time | <50 µs |
| Output format | INT16 $8000 - $7FF0<br>LSB = $0010 = 4.883 mV |
| Variant | Differential input or single-ended input |
| Electrical isolation | |
| Input - ACOPOS | Yes |
| Input - Input | No |
| Input signal | |
| Nominal | -10 to +10 V |
| Maximum | -15 to +15 V |
| Operating modes | Cyclic measurement synchronous to 50 µs ACOPOS clock |
| Conversion procedure | Successive approximation |
| Input filter | Analog third-order low-pass filter / cutoff frequency: 10 kHz |
| Gain drift | Max. ±0.006% / °C [1)] |
| Offset drift | Max. ±0.0005% / °C [1)] |
| Common-mode rejection | |
| DC | Min. -73 dB |
| 50 Hz | Min. -73 dB |
| Crosstalk between analog inputs | Min. -90 dB at 1 kHz |
| Nonlinearity | ±1 LSB |
| Differential input impedance | >10 MΩ |
| Modulation compared to ground potential | Max. ±50 V |
| Modulation between analog input channels | Max. ±5 V |
| Basic accuracy at 25°C | ±0.05% [1)] |
| **Digital outputs** | |
| Quantity | Max. 2 |
| Readable outputs | Yes |
| Continuous current | Max. 45 mA |
| Short-circuit current at 24 V (until cutoff) | Approx. 0.3 A |
| Switching frequency (resistive load) | Max. 100 kHz |
| Switching delay | Max. 5 µs |
| Type | Push-Pull transistor outputs |
| Electrical isolation | |
| Output - ACOPOS | Yes |
| Output - Output | No |
| Switching voltage | |
| Minimum | 18 VDC |
| Nominal | 24 VDC |
| Maximum | 30 VDC |
| Protection | |
| Short-circuit proof | Yes |
| Overload-proof | Yes |
| **Ambient conditions** | |
| Temperature | |
| Operation | |
| Nominal | 5 to 40°C |
| Maximum | 55°C |
| Storage | -25 to 55°C |
| Transport | -25 to 70°C |
| Relative humidity | |
| Operation | 5 to 85% |
| Storage | 5 to 95% |
| Transport | Max. 95% at 40°C |

Table 107: 8AC131.60-1 - Technical data

1) Based on the measurement range end value.



Provided by Industrial Automation Co. • www.industrialautomationco.com • Parts & Repair: 877-727-8757

### 3.11.4 Status indicators

The 24V LED is lit as soon as the supply voltage for the plug-in module goes above 18 VDC.

### 3.11.5 Firmware

The firmware is part of the operating system for the ACOPOS servo drives. Firmware is updated by updating the ACOPOS operating system.

### 3.11.6 Wiring

#### 3.11.6.1 Pinout

| Figure | X11 | Pin | Name | Function |
|---|---|---|---|---|
|   | 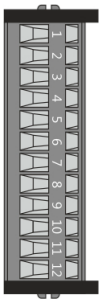  | 1 | Analog I 1 + | Analog input 1 plus |
| | | 2 | Analog I 1 - | Analog input 1 minus |
| | | 3 | COM (1, 2, 5, 6) | 0 V analog input |
| | | 4 | Shield | Shield |
| | | 5 | Analog I 2 + | Analog input 2 plus |
| | | 6 | Analog I 2 - | Analog input 2 minus |
| | | 7 | COM (1, 2, 5, 6) | 0 V analog input |
| | | 8 | Shield | Shield |
| | | 9 | Digital I/O 1 | Digital input/output 1 |
| | | 10 | Digital I/O 2 | Digital input/output 2 |
| | | 11 | +24 V | +24 V supply |
| | | 12 | COM (9 - 11) | 0 V supply |

| Terminal cross sections | [mm²] | [AWG] |
|---|---|---|
| Solid core / multiple-conductor lines | 0.5 - 1.5 | 20 - 14 |
| Flexible, multiple wire line<br>Without wire end sleeves<br>With wire end sleeves | <br>0.5 - 1.5<br>0.5 - 1.5 | <br>20 - 14<br>20 - 14 |
| Approbation Data (UL/C-UL-US- and CSA)<br>UL/C-UL-US<br>CSA | <br>---<br>--- | <br>26 - 14<br>26 - 14 |
| Tightening torque for the terminal screws [Nm] | 0.2 ... 0.25 | |

Table 108: AC131 mixed module - Pinout

### 3.11.6.2 Input/Output circuit diagram

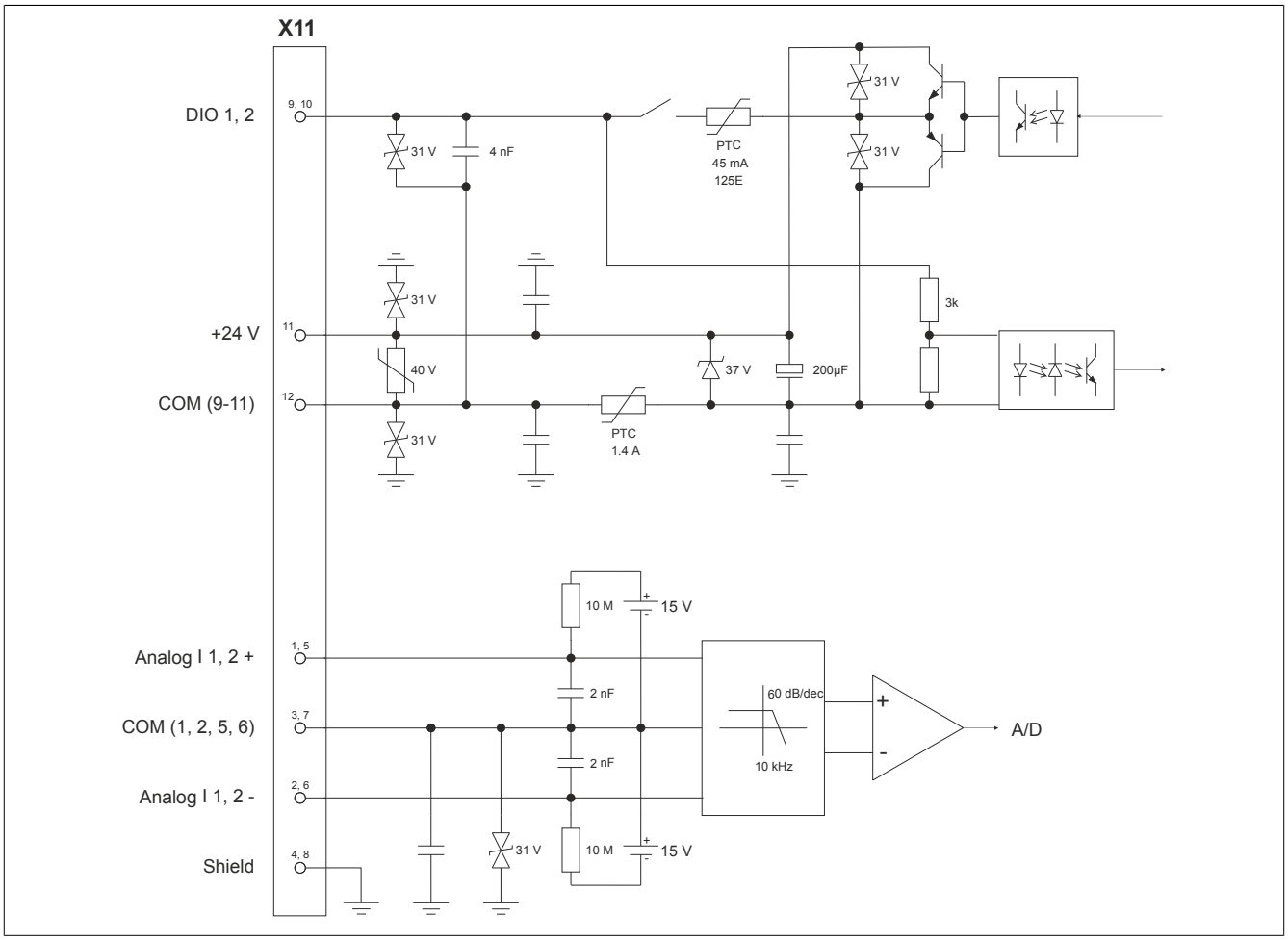


Figure 42: AC131 mixed module - Input/Output circuit diagram



Provided by Industrial Automation Co. • www.industrialautomationco.com • Parts & Repair: 877-727-8757

# 4 8AXB battery module

## 4.1 General information

Battery module 8AXB000.0000-00 can be used in plug-in module 8AC126.60-1. It contains a 3.6 V lithium thionyl chloride (Li/SOCl2) button cell and serves as a backup battery for encoders with battery-backed multi-turn function. For these encoders, the multi-turn function is implemented by an electronic counter instead of a mechanical gear-box. The backup battery ensures that the absolute position information of the encoder is continuously evaluated during a power failure.

### Information:

**Lithium-thionyl chloride batteries have a high energy density and low self-discharge. Their cell voltage remains constant for a long time before dropping off rapidly towards the end of their capacity.**

**If the ACOPOS plug-in module 8AC126.60-1 reports an error, then the capacity of the battery module 8AXB000.0000-00 is only enough for a few more days. When in doubt, it is best to exchange the battery module 8AXB000.0000-00. This should be kept in mind if the machine is scheduled to be disconnected from the mains for several weeks.**

## 4.2 Order data

| Model number | Short description | Figure |
|---|---|---|
| | **Battery Modules** | |
| 8AXB000.0000-00 | 8AC126.60-1 accessory set for encoder buffering consisting of:<br>Battery module with 3.6 V lithium battery |  |

Table 109: 8AXB000.0000-00 - Order data

## 4.3 Technical data

| Model number | 8AXB000.0000-00 |
|---|---|
| **General information** | |
| Short description | 8AC126.60-1 accessory set for encoder buffering consisting of:<br>1x Lithium battery 3.6 V,<br>1x battery holder |
| Certifications | |
| CE | Yes |
| UL | cULus E225616<br>Power conversion equipment |
| **Mechanical properties** | |
| Weight | 11 g |

Table 110: 8AXB000.0000-00 - Technical data

### 4.4 Changing/Inserting the battery module 8AXB000.0000-00

## Caution!

**The following conditions must be met for the position of the encoder position to be maintained when changing battery module 8AXB000.0000-00:**

- **The 8AC126.60-1 plug-in module for which the 8AXB000.0000-00 battery module should be exchanged is installed in an ACOPOS servo drive.**
- **The battery backed encoder is connected to this 8AC126.60-1 plug-in module.**
- **The ACOPOS servo drive is supplied with 24 VDC (at least one of the three LEDs – RUN, READY or ERROR – on the ACOPOS servo drive is lit).**

## Information:

**The color of the BAT LED on the 8AC126.60-1 plug-in module changes to red and the plug-in module reports an error as soon as the 8AXB000.0000-00 battery module is removed. The encoder position is retained as long as the ACOPOS servo drive continues to be supplied with 24 VDC. The BAT LED remains red until a new 8AXB000.0000-00 battery module is inserted and the error is acknowledged. Then the BAT LED returns to green.**

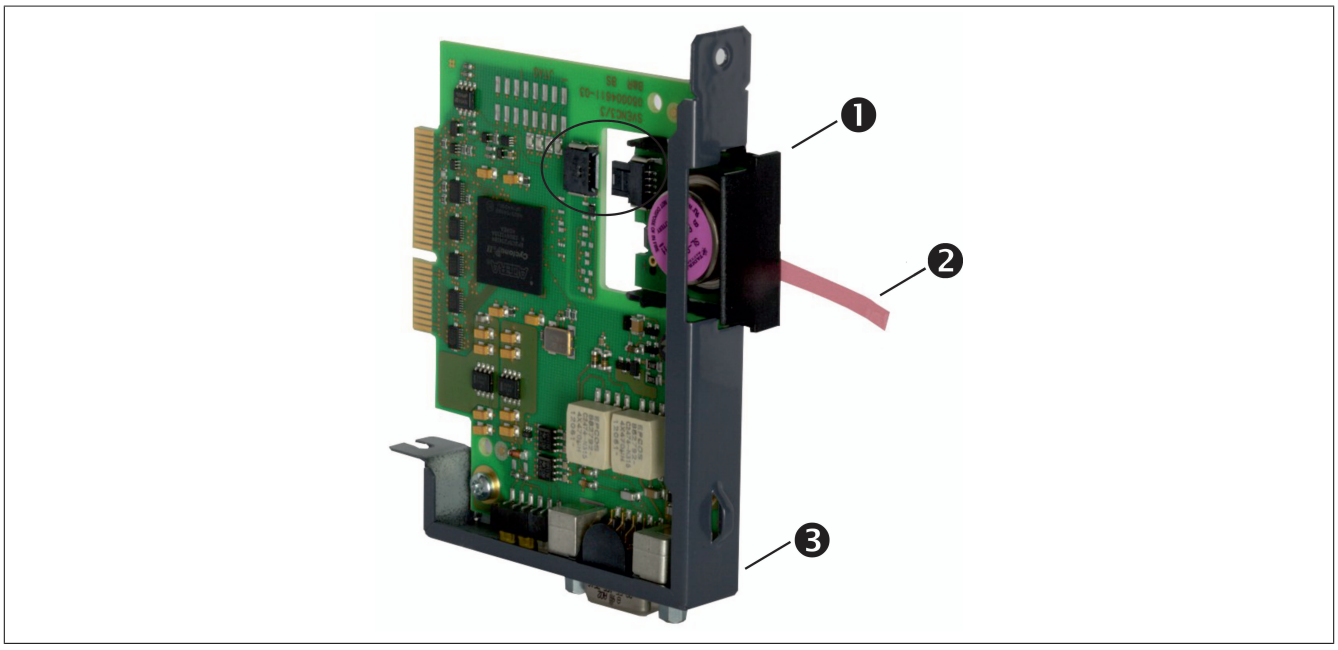


Figure 43: Changing/Inserting the battery module 8AXB000.0000-00

1 Battery module 8AXB000.0000-00
2 Battery removal strip
3 Plug-in module 8AC126.60-1

**Procedure for changing/inserting**

If battery module 8AXB000.0000-00 (1) is already used in plug-in module 8AC126.60-1 (3):

1. Pull the battery removal strip (2) until battery module 8AXB000.0000-00 (1) is released from the plug-in module.
2. Pull battery module 8AXB000.0000-00 (1) out of the recess of the plug-in module.
3. Insert battery module 8AXB000.0000-00 (1).

Inserting battery module 8AXB000.0000-00 (1):

1. Carefully insert battery module 8AXB000.0000-00 (1) into the recess of plug-in module 8AC126.60-1 ACOPOS (3) as shown. It is important to ensure that the battery removal strip (2) does not get caught so that the battery module (1) can be pulled out again.
2. Slide the battery module (1) into the recess until the connector of the battery module engages in the plug-in module.

## Caution!

**The battery module 8AXB000.0000-00 should be replaced every 6 years. The replacement intervals recommended by B&R reflect the batteries' average service life and operating conditions. It does not represent the maximum buffer duration.**

## Warning!

**The 8AXB000.0000-00 battery module must be replaced by another 8AXB000.0000-00 battery module. The battery module may explode if handled improperly. Do not recharge, disassemble or dispose of in fire.**

## Information:

**The status of the battery is provided to the application software by a status bit. The application software must ensure an appropriate response to undervoltage. The drive is not stopped automatically.**





Provided by Industrial Automation Co. • www.industrialautomationco.com • Parts & Repair: 877-727-8757

# 5 8B0W external braking resistors

8B0W external braking resistors are used to dissipate braking energy on ACOPOS servo drives.

## 5.1 Order data

| Model number | Short description | Figure |
|---|---|---|
| | **Braking resistors** |  |
| 8B0W0045H000.000-1 | Braking resistor, 450 W, 50 R, IP20, terminals | |
| 8B0W0045H000.001-1 | Braking resistor, 450 W, 50 R, IP65, terminals | |
| 8B0W0079H000.000-1 | Braking resistor, 790 W, 33 R, IP20, terminals | |
| 8B0W0079H000.001-1 | Braking resistor, 790 W, 33 R, IP65, terminals | |

Table 111: 8B0W0045H000.000-1, 8B0W0045H000.001-1, 8B0W0079H000.000-1, 8B0W0079H000.001-1 - Order data

## 5.2 Technical data

| Model number | 8B0W0045H000.000-1 | 8B0W0045H000.001-1 | 8B0W0079H000.000-1 | 8B0W0079H000.001-1 |
|---|---|---|---|---|
| **General information** | | | | |
| RoHS-compliant | Yes | | | |
| Cooling and mounting type | Wall mounting | | | |
| Certifications | | | | |
| CE | Yes | | | |
| KC | Yes | | | |
| **Braking resistor** | | | | |
| Continuous power depending on mounting orientation | | | | |
| Standing horizontally | 388 W | | 636 W | |
| Hanging vertically | 424 W | | 701 W | |
| Reduction of continuous power depending on ambient temperature | 7.5 W/K (starting at 40°C) | | 13.2 W/K (starting at 40°C) | |
| Ohmic resistance | 50 Ω ±10% | | 33 Ω ±10% | |
| Max. operating voltage | 850 VDC | | | |
| Isolation voltage type test | 4,000 VAC | | | |
| Intrinsically safe | Yes (for operating voltages ≥ 500 VDC) | | | |
| Variant | | | | |
| RB1, RB2 | Terminals with tension spring technology | | | |
| PE | M5 threaded bolt | M4 threaded bolt | M5 threaded bolt | M4 threaded bolt |
| Shield connection | Yes, on the terminal box via high-strength cable gland | | | |
| Terminal connection cross section | | | | |
| Flexible and fine-stranded wires | | | | |
| With wire end sleeves | 1.5 to 10 mm² | | | |
| Approbation data | | | | |
| UL/C-UL-US | 24 to 6 AWG | | | |
| CSA | 22 to 6 AWG | | | |
| Terminal cable outer cross section dimension of attachment cable | 9 to 16.6 mm | | | |
| **Temperature model data** | | | | |
| Thermal resistance between braking resistor and environment depending on mounting orientation | | | | |
| Standing horizontally | 1.657 K/W | | 0.9395 K/W | |
| Hanging vertically | 1.517 K/W | | 0.852 K/W | |
| Thermal capacity | 30.88 Ws/K | | 40.68 Ws/K | |
| Max. permissible overtemperature | 683°C | | 637°C | |
| **Operating conditions** | | | | |
| Permissible mounting orientations | | | | |
| Standing horizontally | Yes | | | |
| Hanging vertically | | | | |
| Connection box, bottom | Yes | | | |
| Connection box, top | No | | | |
| Degree of protection per EN 60529 | | | | |
| Standing horizontally | IP20 | IP65 | IP20 | IP65 |
| Hanging vertically | | | | |
| Connection box, bottom | IP21 | IP65 | IP21 | IP65 |
| Connection box, top | - | | | |
| **Ambient conditions** | | | | |
| Temperature | | | | |
| Operation | -40 to 90°C | | | |

Table 112: 8B0W0045H000.000-1, 8B0W0045H000.001-1, 8B0W0079H000.000-1, 8B0W0079H000.001-1 - Technical data

| Model number | 8B0W0045H000.000-1 | 8B0W0045H000.001-1 | 8B0W0079H000.000-1 | 8B0W0079H000.001-1 |
|---|---|---|---|---|
| Relative humidity | | | | |
| Operation | 5 to 95% | | | |
| **Mechanical properties** | | | | |
| Dimensions | | | | |
| Width | 124 mm | | | |
| Height | 121 mm | | | |
| Depth | 403 mm | 332 mm | 603 mm | 532 mm |
| Weight | 2.4 kg | | 3.9 kg | |

Table 112: 8B0W0045H000.000-1, 8B0W0045H000.001-1, 8B0W0079H000.000-1, 8B0W0079H000.001-1 - Technical data



## 5.3 Wiring

### 5.3.1 8B0W braking resistors - Pinout

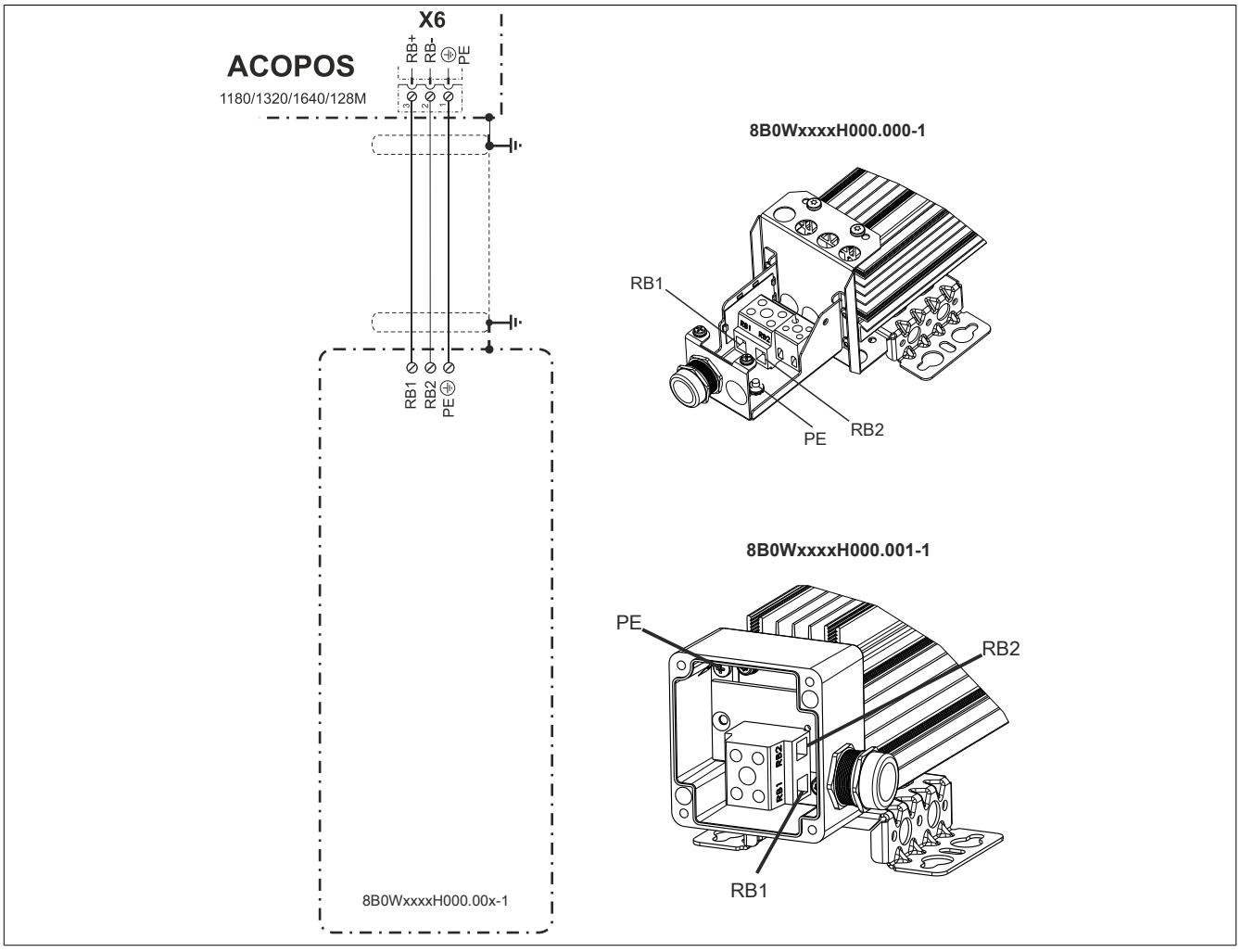


Figure 44: 8B0W - Pinout overview

## Information:

**8B0W external braking resistors must be wired with connection cables that are suitable for maximum line temperatures >90°C.**

**Wiring must be carried out with a shielded cable!**

# 6 Cables

## 6.1 General information

### Assembling cables

Cables assembled by the user are equivalent to cables from 3rd-party manufacturers.

If cables from 3rd-party manufacturers are used, B&R is exempt from any liability and can make no guarantee for the respective characteristics or proper function of the B&R drive system. The user must ensure that the respective national regulations are observed.

## Information:

**Pre-assembled cables from B&R are designed specifically for B&R drive systems and provide considerable support for the disturbance-free operation of B&R drive systems. Whenever possible, always use pre-assembled cables from B&R!**

### 6.1.1 Pre-assembled cables

Using B&R cables guarantees that the EMC limits are not exceeded. The cables are assembled in the EU and are therefore subject to the strictest quality standards.

## Information:

**When using cables from other manufacturers, B&R cannot guarantee adherence to EMC limit values! The connectors on the cables as well as on the motors are part of a properly functioning EMC concept!**

## 6.2 Overview

### Motor cable

| Model number | Short description | Page |
|---|---|---|
| | **0.75 mm² motor cables** | |
| 8CM005.12-0 | Motor cable, length 5 m, 4x 0.75 mm² + 2x 2x 0.35 mm², 8-pin female Intercontec motor connector, can be used in drag chains, UL/CSA listed | 154 |
| 8CM007.12-0 | Motor cable, length 7 m, 4x 0.75 mm² + 2x 2x 0.35 mm², 8-pin female Intercontec motor connector, can be used in drag chains, UL/CSA listed | 154 |
| 8CM010.12-0 | Motor cable, length 10 m, 4x 0.75 mm² + 2x 2x 0.35 mm², 8-pin female Intercontec motor connector, can be used in drag chains, UL/CSA listed | 154 |
| 8CM015.12-0 | Motor cable, length 15 m, 4x 0.75 mm² + 2x 2x 0.35 mm², 8-pin female Intercontec motor connector, can be used in drag chains, UL/CSA listed | 154 |
| 8CM020.12-0 | Motor cable, length 20 m, 4x 0.75 mm² + 2x 2x 0.35 mm², 8-pin female Intercontec motor connector, can be used in drag chains, UL/CSA listed | 154 |
| 8CM025.12-0 | Motor cable, length 25 m, 4x 0.75 mm² + 2x 2x 0.35 mm², 8-pin female Intercontec motor connector, can be used in drag chains, UL/CSA listed | 154 |
| | **1.5 mm² motor cables** | |
| 8CM005.12-1 | Motor cable, length 5 m, 4x 1.5 mm² + 2x 2x 0.75 mm², 8-pin female Intercontec motor connector size 1, can be used in cable drag chains | 158 |
| 8CM007.12-1 | Motor cable, length 7 m, 4x 1.5 mm² + 2x 2x 0.75 mm², 8-pin female Intercontec motor connector size 1, can be used in cable drag chains | 158 |
| 8CM010.12-1 | Motor cable, length 10 m, 4x 1.5 mm² + 2x 2x 0.75 mm², 8-pin female Intercontec motor connector size 1, can be used in cable drag chains | 158 |
| 8CM015.12-1 | Motor cable, length 15 m, 4x 1.5 mm² + 2x 2x 0.75 mm², 8-pin female Intercontec motor connector size 1, can be used in cable drag chains | 158 |
| 8CM020.12-1 | Motor cable, length 20 m, 4x 1.5 mm² + 2x 2x 0.75 mm², 8-pin female Intercontec motor connector size 1, can be used in cable drag chains | 158 |
| 8CM025.12-1 | Motor cable, length 25 m, 4x 1.5 mm² + 2x 2x 0.75 mm², 8-pin female Intercontec motor connector size 1, can be used in cable drag chains | 158 |
| | **10 mm² motor cables** | |
| 8CM005.12-5 | Motor cable, length 5 m, 4x 10 mm² + 2x 2x 1.5 mm², 8-pin female Intercontec motor connector, can be used in drag chains, UL/CSA listed | 164 |
| 8CM007.12-5 | Motor cable, length 7 m, 4x 10 mm² + 2x 2x 1.5 mm², 8-pin female Intercontec motor connector, can be used in drag chains, UL/CSA listed | 164 |
| 8CM010.12-5 | Motor cable, length 10 m, 4x 10 mm² + 2x 2x 1.5 mm², 8-pin female Intercontec motor connector, can be used in drag chains, UL/CSA listed | 164 |
| 8CM015.12-5 | Motor cable, length 15 m, 4x 10 mm² + 2x 2x 1.5 mm², 8-pin female Intercontec motor connector, can be used in drag chains, UL/CSA listed | 164 |
| 8CM020.12-5 | Motor cable, length 20 m, 4x 10 mm² + 2x 2x 1.5 mm², 8-pin female Intercontec motor connector, can be used in drag chains, UL/CSA listed | 164 |
| 8CM025.12-5 | Motor cable, length 25 m, 4x 10 mm² + 2x 2x 1.5 mm², 8-pin female Intercontec motor connector, can be used in drag chains, UL/CSA listed | 164 |
| | **35 mm² motor cables** | |
| 8CM005.12-8 | Motor cable, length 5 m, 4x 35 mm² + 2x 2x 1.5 mm², not assembled, can be used in drag chains, UL/CSA listed | 166 |
| 8CM007.12-8 | Motor cable, length 7 m, 4x 35 mm² + 2x 2x 1.5 mm², not assembled, can be used in drag chains, UL/CSA listed | 166 |

| Model number | Short description | Page |
|---|---|---|
| 8CM010.12-8 | Motor cable, length 10 m, 4x 35 mm² + 2x 2x 1.5 mm², not assembled, can be used in drag chains, UL/CSA listed | 166 |
| 8CM015.12-8 | Motor cable, length 15 m, 4x 35 mm² + 2x 2x 1.5 mm², not assembled, can be used in drag chains, UL/CSA listed | 166 |
| 8CM020.12-8 | Motor cable, length 20 m, 4x 35 mm² + 2x 2x 1.5 mm², not assembled, can be used in drag chains, UL/CSA listed | 166 |
| 8CM025.12-8 | Motor cable, length 25 m, 4x 35 mm² + 2x 2x 1.5 mm², not assembled, can be used in drag chains, UL/CSA listed | 166 |
| | **4 mm² motor cables** | |
| 8CM005.12-3 | Motor cable, length 5 m, 4x 4 mm² + 2x 2x 1 mm², 8-pin female Intercontec motor connector, can be used in drag chains, UL/CSA listed | 160 |
| 8CM007.12-3 | Motor cable, length 7 m, 4x 4 mm² + 2x 2x 1 mm², 8-pin female Intercontec motor connector, can be used in drag chains, UL/CSA listed | 160 |
| 8CM010.12-3 | Motor cable, length 10 m, 4x 4 mm² + 2x 2x 1 mm², 8-pin female Intercontec motor connector, can be used in drag chains, UL/CSA listed | 160 |
| 8CM015.12-3 | Motor cable, length 15 m, 4x 4 mm² + 2x 2x 1 mm², 8-pin female Intercontec motor connector, can be used in drag chains, UL/CSA listed | 160 |
| 8CM020.12-3 | Motor cable, length 20 m, 4x 4 mm² + 2x 2x 1 mm², 8-pin female Intercontec motor connector, can be used in drag chains, UL/CSA listed | 160 |
| 8CM025.12-3 | Motor cable, length 25 m, 4x 4 mm² + 2x 2x 1 mm², 8-pin female Intercontec motor connector, can be used in drag chains, UL/CSA listed | 160 |
| | **4 mm² motor cables with size 1.5 motor connector** | |
| 8CM005.19-3 | Motor cable, length 5 m, 4x 4 mm² + 2x 0.75 mm² + 2x 1 mm², 8-pin female Intercontec motor connector size 1.5, medium wire stripping length, can be used in cable drag chains | 162 |
| 8CM007.19-3 | Motor cable, length 7 m, 4x 4 mm² + 2x 0.75 mm² + 2x 1 mm², 8-pin female Intercontec motor connector size 1.5, medium wire stripping length, can be used in cable drag chains | 162 |
| 8CM010.19-3 | Motor cable, length 10 m, 4x 4 mm² + 2x 0.75 mm² + 2x 1 mm², 8-pin female Intercontec motor connector size 1.5, medium wire stripping length, can be used in cable drag chains | 162 |
| 8CM015.19-3 | Motor cable, length 15 m, 4x 4 mm² + 2x 0.75 mm² + 2x 1 mm², 8-pin female Intercontec motor connector size 1.5, medium wire stripping length, can be used in cable drag chains | 162 |
| 8CM020.19-3 | Motor cable, length 20 m, 4x 4 mm² + 2x 0.75 mm² + 2x 1 mm², 8-pin female Intercontec motor connector size 1.5, medium wire stripping length, can be used in cable drag chains | 162 |
| 8CM025.19-3 | Motor cable, length 25 m, 4x 4 mm² + 2x 0.75 mm² + 2x 1 mm², 8-pin female Intercontec motor connector size 1.5, medium wire stripping length, can be used in cable drag chains | 162 |
| | **Motor cable 0.75 mm² SpringTec socket** | |
| 8BCM0005.3034C-0 | Motor cable, length 5 m, 4x 0.75 mm² + 2x 2x 0.35 mm², 8-pin female SpringTec motor connector, UL/CSA listed | 156 |
| 8BCM0007.3034C-0 | Motor cable, length 7 m, 4x 0.75 mm² + 2x 2x 0.35 mm², 8-pin female SpringTec motor connector, UL/CSA listed | 156 |
| 8BCM0010.3034C-0 | Motor cable, length 10 m, 4x 0.75 mm² + 2x 2x 0.35 mm², 8-pin female SpringTec motor connector, UL/CSA listed | 156 |
| 8BCM0015.3034C-0 | Motor cable, length 15 m, 4x 0.75 mm² + 2x 2x 0.35 mm², 8-pin female SpringTec motor connector, UL/CSA listed | 156 |
| 8BCM0020.3034C-0 | Motor cable, length 20 m, 4x 0.75 mm² + 2x 2x 0.35 mm², 8-pin female SpringTec motor connector, UL/CSA listed | 156 |
| 8BCM0025.3034C-0 | Motor cable, length 25 m, 4x 0.75 mm² + 2x 2x 0.35 mm², 8-pin female SpringTec motor connector, UL/CSA listed | 156 |

## Hybrid motor cables

| Model number | Short description | Page |
|---|---|---|
| | **1.5 mm² hybrid motor cable** | |
| 8CH005.12-1 | ACOPOS hybrid motor cable, length 5 m, 4x 1.5 mm² + 2x 0.75 mm² + 2x 0.30 mm² + 2x 2x 0.15 mm², 13-pin female speedtec hybrid motor connector, can be used in cable drag chains | 170 |
| 8CH007.12-1 | ACOPOS hybrid motor cable, length 7 m, 4x 1.5 mm² + 2x 0.75 mm² + 2x 0.30 mm² + 2x 2x 0.15 mm², 13-pin female speedtec hybrid motor connector, can be used in cable drag chains | 170 |
| 8CH010.12-1 | ACOPOS hybrid motor cable, length 10 m, 4x 1.5 mm² + 2x 0.75 mm² + 2x 0.30 mm² + 2x 2x 0.15 mm², 13-pin female speedtec hybrid motor connector, can be used in cable drag chains | 170 |
| 8CH015.12-1 | ACOPOS hybrid motor cable, length 15 m, 4x 1.5 mm² + 2x 0.75 mm² + 2x 0.30 mm² + 2x 2x 0.15 mm², 13-pin female speedtec hybrid motor connector, can be used in cable drag chains | 170 |
| 8CH020.12-1 | ACOPOS hybrid motor cable, length 20 m, 4x 1.5 mm² + 2x 0.75 mm² + 2x 0.30 mm² + 2x 2x 0.15 mm², 13-pin female speedtec hybrid motor connector, can be used in cable drag chains | 170 |
| 8CH025.12-1 | ACOPOS hybrid motor cable, length 25 m, 4x 1.5 mm² + 2x 0.75 mm² + 2x 0.30 mm² + 2x 2x 0.15 mm², 13-pin female speedtec hybrid motor connector, can be used in cable drag chains | 170 |
| | **4 mm² hybrid motor cables** | |
| 8CH005.12-3 | ACOPOS hybrid motor cable, length 5 m, 4x 4 mm² + 2x 1 mm² + 2x 0.30 mm² + 2x 2x 0.15 mm², 13-pin female speedtec hybrid motor connector, can be used in cable drag chains | 172 |
| 8CH007.12-3 | ACOPOS hybrid motor cable, length 7 m, 4x 4 mm² + 2x 1 mm² + 2x 0.30 mm² + 2x 2x 0.15 mm², 13-pin female speedtec hybrid motor connector, can be used in cable drag chains | 172 |
| 8CH010.12-3 | ACOPOS hybrid motor cable, length 10 m, 4x 4 mm² + 2x 1 mm² + 2x 0.30 mm² + 2x 2x 0.15 mm², 13-pin female speedtec hybrid motor connector, can be used in cable drag chains | 172 |
| 8CH015.12-3 | ACOPOS hybrid motor cable, length 15 m, 4x 4 mm² + 2x 1 mm² + 2x 0.30 mm² + 2x 2x 0.15 mm², 13-pin female speedtec hybrid motor connector, can be used in cable drag chains | 172 |
| 8CH020.12-3 | ACOPOS hybrid motor cable, length 20 m, 4x 4 mm² + 2x 1 mm² + 2x 0.30 mm² + 2x 2x 0.15 mm², 13-pin female speedtec hybrid motor connector, can be used in cable drag chains | 172 |
| 8CH025.12-3 | ACOPOS hybrid motor cable, length 25 m, 4x 4 mm² + 2x 1 mm² + 2x 0.30 mm² + 2x 2x 0.15 mm², 13-pin female speedtec hybrid motor connector, can be used in cable drag chains | 172 |



Provided by Industrial Automation Co. • www.industrialautomationco.com • Parts & Repair: 877-727-8757

## EnDat 2.1 cables

| Model number | Short description | Page |
|---|---|---|
| | **EnDat 2.1 cables** | |
| 8CE005.12-1 | EnDat 2.1 cable, length 5 m, 10x 0.14 mm² + 2x 0.5 mm², Intercontec 17-pin female EnDat connector, 15-pin male DSUB servo connector, can be used in cable drag chains, UL/CSA listed | 176 |
| 8CE007.12-1 | EnDat 2.1 cable, length 7 m, 10x 0.14 mm² + 2x 0.5 mm², Intercontec 17-pin female EnDat connector, 15-pin male DSUB servo connector, can be used in cable drag chains, UL/CSA listed | 176 |
| 8CE010.12-1 | EnDat 2.1 cable, length 10 m, 10x 0.14 mm² + 2x 0.5 mm², Intercontec 17-pin female EnDat connector, 15-pin male DSUB servo connector, can be used in cable drag chains, UL/CSA listed | 176 |
| 8CE015.12-1 | EnDat 2.1 cable, length 15 m, 10x 0.14 mm² + 2x 0.5 mm², Intercontec 17-pin female EnDat connector, 15-pin male DSUB servo connector, can be used in cable drag chains, UL/CSA listed | 176 |
| 8CE020.12-1 | EnDat 2.1 cable, length 20 m, 10x 0.14 mm² + 2x 0.5 mm², Intercontec 17-pin female EnDat connector, 15-pin male DSUB servo connector, can be used in cable drag chains, UL/CSA listed | 176 |
| 8CE025.12-1 | EnDat 2.1 cable, length 25 m, 10x 0.14 mm² + 2x 0.5 mm², Intercontec 17-pin female EnDat connector, 15-pin male DSUB servo connector, can be used in cable drag chains, UL/CSA listed | 176 |

## Resolver cables

| Model number | Short description | Page |
|---|---|---|
| | **Resolver cables** | |
| 8CR005.12-1 | Resolver cable, length 5 m, 3x 2x AWG 24 (19x 0.127), Intercontec 12-pin female resolver connector, 9-pin male DSUB servo connector, can be used in cable drag chains, UL/CSA listed | 179 |
| 8CR007.12-1 | Resolver cable, length 7 m, 3x 2x AWG 24 (19x 0.127), Intercontec 12-pin female resolver connector, 9-pin male DSUB servo connector, can be used in cable drag chains, UL/CSA listed | 179 |
| 8CR010.12-1 | Resolver cable, length 10 m, 3x 2x AWG 24 (19x 0.127), Intercontec 12-pin female resolver connector, 9-pin male DSUB servo connector, can be used in cable drag chains, UL/CSA listed | 179 |
| 8CR015.12-1 | Resolver cable, length 15 m, 3x 2x AWG 24 (19x 0.127), Intercontec 12-pin female resolver connector, 9-pin male DSUB servo connector, can be used in cable drag chains, UL/CSA listed | 179 |
| 8CR020.12-1 | Resolver cable, length 20 m, 3x 2x AWG 24 (19x 0.127), Intercontec 12-pin female resolver connector, 9-pin male DSUB servo connector, can be used in cable drag chains, UL/CSA listed | 179 |
| 8CR025.12-1 | Resolver cable, length 25 m, 3x 2x AWG 24 (19x 0.127), Intercontec 12-pin female resolver connector, 9-pin male DSUB servo connector, can be used in cable drag chains, UL/CSA listed | 179 |

## Cable extensions

| Model number | Short description | Page |
|---|---|---|
| | **Motor cables 0.75 mm² SpringTec connector** | |
| 8BCM0005.10360-0 | Cable extension for 0.75 mm² motor cables with springtec connector, length 5 m, can be used in cable drag chains | 185 |
| 8BCM0007.10360-0 | Cable extension for 0.75 mm² motor cables with springtec connector, length 7 m, can be used in cable drag chains | 185 |
| 8BCM0010.10360-0 | Cable extension for 0.75 mm² motor cables with springtec connector, length 10 m, can be used in cable drag chains | 185 |
| 8BCM0015.10360-0 | Cable extension for 0.75 mm² motor cables with springtec connector, length 15 m, can be used in cable drag chains | 185 |
| 8BCM0020.10360-0 | Cable extension for 0.75 mm² motor cables with springtec connector, length 20 m, can be used in cable drag chains | 185 |
| 8BCM0025.10360-0 | Cable extension for 0.75 mm² motor cables with springtec connector, length 25 m, can be used in cable drag chains | 185 |
| | **Motor cables 1.5 mm²** | |
| 8BCM0005.11140-0 | Cable extension for 1.5 mm² motor cables with speedtec or standard connector, length 5 m, can be used in cable drag chains | 187 |
| 8BCM0007.11140-0 | Cable extension for 1.5 mm² motor cables with speedtec or standard connector, length 7 m, can be used in cable drag chains | 187 |
| 8BCM0010.11140-0 | Cable extension for 1.5 mm² motor cables with speedtec or standard connector, length 10 m, can be used in cable drag chains | 187 |
| 8BCM0015.11140-0 | Cable extension for 1.5 mm² motor cables with speedtec or standard connector, length 15 m, can be used in cable drag chains | 187 |
| 8BCM0020.11140-0 | Cable extension for 1.5 mm² motor cables with speedtec or standard connector, length 20 m, can be used in cable drag chains | 187 |
| 8BCM0025.11140-0 | Cable extension for 1.5 mm² motor cables with speedtec or standard connector, length 25 m, can be used in cable drag chains | 187 |
| | **Motor cables 10 mm²** | |
| 8BCM0005.15250-0 | Cable extension for 10 mm² motor cables with speedtec or standard connector, size 1.5, length 5 m, can be used in cable drag chains | 193 |
| 8BCM0007.15250-0 | Cable extension for 10 mm² motor cables with speedtec or standard connector, size 1.5, length 7 m, can be used in cable drag chains | 193 |
| 8BCM0010.15250-0 | Cable extension for 10 mm² motor cables with speedtec or standard connector, size 1.5, length 10 m, can be used in cable drag chains | 193 |
| 8BCM0015.15250-0 | Cable extension for 10 mm² motor cables with speedtec or standard connector, size 1.5, length 15 m, can be used in cable drag chains | 193 |
| 8BCM0020.15250-0 | Cable extension for 10 mm² motor cables with speedtec or standard connector, size 1.5, length 20 m, can be used in cable drag chains | 193 |
| 8BCM0025.15250-0 | Cable extension for 10 mm² motor cables with speedtec or standard connector, size 1.5, length 25 m, can be used in cable drag chains | 193 |
| | **Motor cables 4 mm²** | |
| 8BCM0005.13140-0 | Cable extension for 4 mm² motor cables with speedtec or standard connector, length 5 m, can be used in cable drag chains | 189 |
| 8BCM0005.13250-0 | Cable extension for 4 mm² motor cables with speedtec or standard connector, size 1.5, length 5 m, can be used in cable drag chains | 191 |



Provided by Industrial Automation Co. • www.industrialautomationco.com • Parts & Repair: 877-727-8757

| Model number | Short description | Page |
|---|---|---|
| 8BCM0007.13140-0 | Cable extension for 4 mm² motor cables with speedtec or standard connector, length 7 m, can be used in cable drag chains | 189 |
| 8BCM0007.13250-0 | Cable extension for 4 mm² motor cables with speedtec or standard connector, size 1.5, length 7 m, can be used in cable drag chains | 191 |
| 8BCM0010.13140-0 | Cable extension for 4 mm² motor cables with speedtec or standard connector, length 10 m, can be used in cable drag chains | 189 |
| 8BCM0010.13250-0 | Cable extension for 4 mm² motor cables with speedtec or standard connector, size 1.5, length 10 m, can be used in cable drag chains | 191 |
| 8BCM0015.13140-0 | Cable extension for 4 mm² motor cables with speedtec or standard connector, length 15 m, can be used in cable drag chains | 189 |
| 8BCM0015.13250-0 | Cable extension for 4 mm² motor cables with speedtec or standard connector, size 1.5, length 15 m, can be used in cable drag chains | 191 |
| 8BCM0020.13140-0 | Cable extension for 4 mm² motor cables with speedtec or standard connector, length 20 m, can be used in cable drag chains | 189 |
| 8BCM0020.13250-0 | Cable extension for 4 mm² motor cables with speedtec or standard connector, size 1.5, length 20 m, can be used in cable drag chains | 191 |
| 8BCM0025.13140-0 | Cable extension for 4 mm² motor cables with speedtec or standard connector, length 25 m, can be used in cable drag chains | 189 |
| 8BCM0025.13250-0 | Cable extension for 4 mm² motor cables with speedtec or standard connector, size 1.5, length 25 m, can be used in cable drag chains | 191 |
| | **Resolver Cables SpringTec connector** | |
| 8BCR0005.11230-0 | Cable extension for resolver cables with springtec connector, length 5 m, can be used in cable drag chains | 197 |
| 8BCR0007.11230-0 | Cable extension for resolver cables with springtec connector, length 7 m, can be used in cable drag chains | 197 |
| 8BCR0010.11230-0 | Cable extension for resolver cables with springtec connector, length 10 m, can be used in cable drag chains | 197 |
| 8BCR0015.11230-0 | Cable extension for resolver cables with springtec connector, length 15 m, can be used in cable drag chains | 197 |
| 8BCR0020.11230-0 | Cable extension for resolver cables with springtec connector, length 20 m, can be used in cable drag chains | 197 |
| 8BCR0025.11230-0 | Cable extension for resolver cables with springtec connector, length 25 m, can be used in cable drag chains | 197 |
| | **Resolver cables** | |
| 8BCR0005.11120-0 | Cable extension for resolver cable with speedtec or standard connector, length 5 m, can be used in cable drag chains | 195 |
| 8BCR0007.11120-0 | Cable extension for resolver cable with speedtec or standard connector, length 7 m, can be used in cable drag chains | 195 |
| 8BCR0010.11120-0 | Cable extension for resolver cable with speedtec or standard connector, length 10 m, can be used in cable drag chains | 195 |
| 8BCR0015.11120-0 | Cable extension for resolver cable with speedtec or standard connector, length 15 m, can be used in cable drag chains | 195 |
| 8BCR0020.11120-0 | Cable extension for resolver cable with speedtec or standard connector, length 20 m, can be used in cable drag chains | 195 |
| 8BCR0025.11120-0 | Cable extension for resolver cable with speedtec or standard connector, length 25 m, can be used in cable drag chains | 195 |



Provided by Industrial Automation Co. • www.industrialautomationco.com • Parts & Repair: 877-727-8757

## 6.3 Motor cables

### 6.3.1 0.75 mm² motor cables

#### 6.3.1.1 Can be used in cable drag chains

##### 6.3.1.1.1 Order data

| Model number | Short description | Figure |
|---|---|---|
| | **0.75 mm² motor cables** |  |
| 8CM005.12-0 | Motor cable, length 5 m, 4x 0.75 mm² + 2x 2x 0.35 mm², 8-pin female Intercontec motor connector, can be used in drag chains, UL/CSA listed | |
| 8CM007.12-0 | Motor cable, length 7 m, 4x 0.75 mm² + 2x 2x 0.35 mm², 8-pin female Intercontec motor connector, can be used in drag chains, UL/CSA listed | |
| 8CM010.12-0 | Motor cable, length 10 m, 4x 0.75 mm² + 2x 2x 0.35 mm², 8-pin female Intercontec motor connector, can be used in drag chains, UL/CSA listed | |
| 8CM015.12-0 | Motor cable, length 15 m, 4x 0.75 mm² + 2x 2x 0.35 mm², 8-pin female Intercontec motor connector, can be used in drag chains, UL/CSA listed | |
| 8CM020.12-0 | Motor cable, length 20 m, 4x 0.75 mm² + 2x 2x 0.35 mm², 8-pin female Intercontec motor connector, can be used in drag chains, UL/CSA listed | |
| 8CM025.12-0 | Motor cable, length 25 m, 4x 0.75 mm² + 2x 2x 0.35 mm², 8-pin female Intercontec motor connector, can be used in drag chains, UL/CSA listed | |

Table 113: 8CM005.12-0, 8CM007.12-0, 8CM010.12-0, 8CM015.12-0, 8CM020.12-0, 8CM025.12-0 - Order data

**Information:**

**This cable assembly may be available in other lengths.**
**For a current overview, see the B&R website (0.75 mm² motor cables, can be used in cable drag chains).**

##### 6.3.1.1.2 Technical data

| Model number | 8CM005.12-0 | 8CM007.12-0 | 8CM010.12-0 | 8CM015.12-0 | 8CM020.12-0 | 8CM025.12-0 |
|---|---|---|---|---|---|---|
| **General information** | | | | | | |
| Cable cross section | 4x 0.75 mm² + 2x 2x 0.35 mm² | | | | | |
| Durability | Oil resistance according to VDE 0472 part 803 as well as standard hydraulic oil | | | | | |
| Listed | UL AWM Style 20234, 80°C, 1000 V, E63216 and CSA AWM I/II A/B, 90°C, 1000 V, FT2 LL46064 | | | | | |
| Certification | | | | | | |
| cULus | Yes | | | | | |
| **Cable construction** | | | | | | |
| Power lines | | | | | | |
| Quantity | 4 | | | | | |
| Wire insulation | Special thermoplastic material | | | | | |
| Wire colors | Black, brown, blue, yellow/green | | | | | |
| Design | Tinned copper litz wire | | | | | |
| Diameter | 0.75 mm² | | | | | |
| Shield | No | | | | | |
| Stranding | No | | | | | |
| Signal lines | | | | | | |
| Quantity | 4 | | | | | |
| Wire insulation | Special thermoplastic material | | | | | |
| Wire colors | White, white/red, white/blue, white/green | | | | | |
| Design | Tinned copper litz wire | | | | | |
| Diameter | 0.35 mm² | | | | | |
| Shield | Separate shielding for pairs, tinned copper mesh, optical coverage >85% and foil banding | | | | | |
| Stranding | White with white/red and white/blue with white/green | | | | | |
| Cable stranding | With filler elements and foil banding | | | | | |
| Complete shielding | Tinned copper mesh, optical coverage >85% and wrapped in isolating film | | | | | |
| Outer sheathing | | | | | | |
| Material | PUR | | | | | |
| Color | Orange, similar to RAL 2003 flat | | | | | |
| Labeling | BERNECKER + RAINER 4x0,75+2x2x0,35 FLEX UL AWM STYLE 20234<br>80°C 1000 V E63216 CSA AWM I/II A/B 90°C 1000 V FT2 LL46064 | | | | | |
| **Connector** | | | | | | |
| Type | Motor plug, 8-pin, size 1, SpeedTec | | | | | |
| Connection cycles | >50 | | | | | |
| Contacts | 8 (4 power and 4 signal contacts) | | | | | |
| EN 60529 protection | IP67 when connected | | | | | |

Table 114: 8CM005.12-0, 8CM007.12-0, 8CM010.12-0, 8CM015.12-0, 8CM020.12-0, 8CM025.12-0 - Technical data

| Model number | 8CM005.12-0 | 8CM007.12-0 | 8CM010.12-0 | 8CM015.12-0 | 8CM020.12-0 | 8CM025.12-0 |
|---|---|---|---|---|---|---|
| **Electrical characteristics** | | | | | | |
| Test voltage | | | | | | |
| Wire/Wire | 3 kV | | | | | |
| Wire/Shield | 3 kV | | | | | |
| Conductor resistance | | | | | | |
| Power lines | ≤0.15 Ω | ≤0.20 Ω | ≤0.29 Ω | ≤0.44 Ω | ≤0.58 Ω | ≤0.73 Ω |
| Signal lines | ≤0.28 Ω | ≤0.39 Ω | ≤0.55 Ω | ≤0.83 Ω | ≤1.1 Ω | ≤1.38 Ω |
| Insulation resistance | >40 GΩ | >28.57 GΩ | >20 GΩ | >13.33 GΩ | >10 GΩ | >8 GΩ |
| Max. current load in accordance with IEC 60364-5-523 by installation type | | | | | | |
| Wall mounting | 13 A | | | | | |
| Installed in conduit or cable duct | 11.5 A | | | | | |
| Installed in cable tray | 13.5 A | | | | | |
| **Environmental conditions** | | | | | | |
| Temperature | | | | | | |
| Moving | -10 to 80°C | | | | | |
| Static | -40 to 90°C | | | | | |
| **Mechanical characteristics** | | | | | | |
| Dimensions | | | | | | |
| Length | 5 m | 7 m | 10 m | 15 m | 20 m | 25 m |
| Diameter | 10.9 mm ±0.4 mm | | | | | |
| Flex radius | | | | | | |
| Single bend | >34 mm | | | | | |
| Moving | ≥85 mm | | | | | |
| Drag chain data | | | | | | |
| Acceleration | <60 m/s² | | | | | |
| Flex cycles 1) | ≥3,000,000 | | | | | |
| Velocity | ≤4 m/s | | | | | |
| Weight | 0.98 kg | 1.32 kg | 1.82 kg | 2.67 kg | 3.52 kg | 4.37 kg |

Table 114: 8CM005.12-0, 8CM007.12-0, 8CM010.12-0, 8CM015.12-0, 8CM020.12-0, 8CM025.12-0 - Technical data

1) At an ambient temperature of 20°C and a flex radius of 125 mm.



Provided by Industrial Automation Co. • www.industrialautomationco.com • Parts & Repair: 877-727-8757

### 6.3.1.2 Cannot be used in cable drag chains

#### 6.3.1.2.1 Order data

| Model number | Short description | Figure |
|---|---|---|
| | **Motor cable 0.75 mm² SpringTec socket** |  |
| 8BCM0005.3034C-0 | Motor cable, length 5 m, 4x 0.75 mm² + 2x 2x 0.35 mm², 8-pin female SpringTec motor connector, UL/CSA listed | |
| 8BCM0007.3034C-0 | Motor cable, length 7 m, 4x 0.75 mm² + 2x 2x 0.35 mm², 8-pin female SpringTec motor connector, UL/CSA listed | |
| 8BCM0010.3034C-0 | Motor cable, length 10 m, 4x 0.75 mm² + 2x 2x 0.35 mm², 8-pin female SpringTec motor connector, UL/CSA listed | |
| 8BCM0015.3034C-0 | Motor cable, length 15 m, 4x 0.75 mm² + 2x 2x 0.35 mm², 8-pin female SpringTec motor connector, UL/CSA listed | |
| 8BCM0020.3034C-0 | Motor cable, length 20 m, 4x 0.75 mm² + 2x 2x 0.35 mm², 8-pin female SpringTec motor connector, UL/CSA listed | |
| 8BCM0025.3034C-0 | Motor cable, length 25 m, 4x 0.75 mm² + 2x 2x 0.35 mm², 8-pin female SpringTec motor connector, UL/CSA listed | |

Table 115: 8BCM0005.3034C-0, 8BCM0007.3034C-0, 8BCM0010.3034C-0, 8BCM0015.3034C-0, 8BCM0020.3034C-0, 8BCM0025.3034C-0 - Order data

## Information:

**This cable assembly may be available in other lengths.**
**For a current overview, see the B&R website (0.75 mm² motor cables with female springtec connector).**

#### 6.3.1.2.2 Technical data

| Model number | 8BCM0005.3034C-0 | 8BCM0007.3034C-0 | 8BCM0010.3034C-0 | 8BCM0015.3034C-0 | 8BCM0020.3034C-0 | 8BCM0025.3034C-0 |
|---|---|---|---|---|---|---|
| **General information** | | | | | | |
| Cable cross section | 4x 0.75 mm² + 2x 2x 0.34 mm² | | | | | |
| Durability | Oil resistant TM5 in accordance with VDE 0281 part 1 / HD21.1S4 (test method in accordance with EN60811-2-1)<br>Flame resistant in accordance with IEC 60332-1-2 / UL 1581 (VW-1) / CSA C22.2 (FT-1) | | | | | |
| Listed | UL Style 2570 80°C 1000 V VW-1 E47573 and cUL AWM I/II A/B 80°C 1000 V FT-1 | | | | | |
| Certification | | | | | | |
| c-UL-us | Yes | | | | | |
| **Cable structure** | | | | | | |
| Power lines | | | | | | |
| Quantity | 4 | | | | | |
| Wire insulation | PP | | | | | |
| Wire colors | Black, brown, blue, yellow/green | | | | | |
| Design | Tinned copper stranded wire | | | | | |
| Diameter | 0.75 mm² | | | | | |
| Shield | No | | | | | |
| Stranding | No | | | | | |
| Signal lines | | | | | | |
| Quantity | 4 | | | | | |
| Wire insulation | PP | | | | | |
| Wire colors | White, white/red, white/blue, white/green | | | | | |
| Design | Tinned copper stranded wire | | | | | |
| Diameter | 0.34 mm² | | | | | |
| Shield | Separate shielding for pairs, tinned copper mesh, optical coverage >85% and foil banding | | | | | |
| Stranding | White with white/red and white/blue with white/green | | | | | |
| Cable stranding | With filler elements and foil banding | | | | | |
| Cable shielding | Tinned copper mesh, optical coverage >85% and wrapped in isolating film | | | | | |
| Outer sheathing | | | | | | |
| Material | PVC | | | | | |
| Color | Orange, similar to RAL 2003 flat | | | | | |
| Labeling | B&R 4x0.75+2x2x0.34 XX/YYYY E47543 cURus AWM STYLE 2570 I/II A/B 80°C 1000 V FT-1 [1)] | | | | | |
| **Electrical characteristics** | | | | | | |
| Test voltage | | | | | | |
| Wire/wire | 4 kV | | | | | |
| Wire/shield | 3 kV | | | | | |
| Conductor resistance | | | | | | |
| Power lines | ≤0.13 Ω | ≤0.19 Ω | ≤0.27 Ω | ≤0.4 Ω | ≤0.53 Ω | ≤0.67 Ω |
| Signal lines | ≤0.29 Ω | ≤0.41 Ω | ≤0.58 Ω | ≤0.87 Ω | ≤1.17 Ω | ≤1.46 Ω |
| Insulation resistance | >20 GΩ | >14.29 GΩ | >10 GΩ | >6.67 GΩ | >5 GΩ | >4 GΩ |

Table 116: 8BCM0005.3034C-0, 8BCM0007.3034C-0, 8BCM0010.3034C-0, 8BCM0015.3034C-0, 8BCM0020.3034C-0, 8BCM0025.3034C-0 - Technical data

| Model number | 8BCM0005.3034C-0 | 8BCM0007.3034C-0 | 8BCM0010.3034C-0 | 8BCM0015.3034C-0 | 8BCM0020.3034C-0 | 8BCM0025.3034C-0 |
|---|---|---|---|---|---|---|
| Max. current load in accordance with IEC 60364-5-523 depending on type of installation | | | | | | |
| Wall mounting | 9.8 A | | | | | |
| Installed in conduit or cable duct | 8.5 A | | | | | |
| Installed in a cable tray | 10.4 A | | | | | |
| **Environmental conditions** | | | | | | |
| Temperature | | | | | | |
| Moving | 0 to 60°C | | | | | |
| Static | -20 to 80°C | | | | | |
| **Mechanical characteristics** | | | | | | |
| Dimensions | | | | | | |
| Length | 5 m | 7 m | 10 m | 15 m | 20 m | 25 m |
| Diameter | 10.6 mm ±0.4 mm | | | | | |
| Flex radius | | | | | | |
| Single bend | >55 mm | | | | | |
| Moving | ≥165 mm | | | | | |
| Weight | 1.2 kg | 1.5 kg | 2 kg | 2.8 kg | 3.6 kg | 4 kg |

Table 116: 8BCM0005.3034C-0, 8BCM0007.3034C-0, 8BCM0010.3034C-0, 8BCM0015.3034C-0, 8BCM0020.3034C-0, 8BCM0025.3034C-0 - Technical data

1) XX ... Week of manufacture; YYYY ... Year of manufacture





Provided by Industrial Automation Co. • www.industrialautomationco.com • Parts & Repair: 877-727-8757

## 6.3.2 1.5 mm² motor cables

### 6.3.2.1 Order data

| Model number | Short description | Figure |
|---|---|---|
| | **1.5 mm² motor cables** |  |
| 8CM005.12-1 | Motor cable, length 5 m, 4x 1.5 mm² + 2x 2x 0.75 mm², 8-pin female Intercontec motor connector size 1, can be used in cable drag chains | |
| 8CM007.12-1 | Motor cable, length 7 m, 4x 1.5 mm² + 2x 2x 0.75 mm², 8-pin female Intercontec motor connector size 1, can be used in cable drag chains | |
| 8CM010.12-1 | Motor cable, length 10 m, 4x 1.5 mm² + 2x 2x 0.75 mm², 8-pin female Intercontec motor connector size 1, can be used in cable drag chains | |
| 8CM015.12-1 | Motor cable, length 15 m, 4x 1.5 mm² + 2x 2x 0.75 mm², 8-pin female Intercontec motor connector size 1, can be used in cable drag chains | |
| 8CM020.12-1 | Motor cable, length 20 m, 4x 1.5 mm² + 2x 2x 0.75 mm², 8-pin female Intercontec motor connector size 1, can be used in cable drag chains | |
| 8CM025.12-1 | Motor cable, length 25 m, 4x 1.5 mm² + 2x 2x 0.75 mm², 8-pin female Intercontec motor connector size 1, can be used in cable drag chains | |

Table 117: 8CM005.12-1, 8CM007.12-1, 8CM010.12-1, 8CM015.12-1, 8CM020.12-1, 8CM025.12-1 - Order data

## Information:

**This cable assembly may be available in other lengths.**
**For a current overview, see the B&R website (1.5 mm² motor cables, can be used in cable drag chains).**

### 6.3.2.2 Technical data

| Model number | 8CM005.12-1 | 8CM007.12-1 | 8CM010.12-1 | 8CM015.12-1 | 8CM020.12-1 | 8CM025.12-1 |
|---|---|---|---|---|---|---|
| **General information** | | | | | | |
| Cable cross section | 4x 1.5 mm² + 2x 2x 0.75 mm² | | | | | |
| Durability | Oil resistance per VDE 0472 Part 803 as well as standard hydraulic oils | | | | | |
| Certification | UL AWM Style 20234, 80°C, 1000 V, E63216 and CSA AWM I/II A/B, 90°C, 1000 V, FT2 LL46064 | | | | | |
| Certifications | | | | | | |
| CE | Yes | | | | | |
| UL | cULus E225616<br>Power conversion equipment | | | | | |
| **Cable construction** | | | | | | |
| Power lines | | | | | | |
| Quantity | 4 | | | | | |
| Wire insulation | Special thermoplastic material | | | | | |
| Wire colors | Black, brown, blue, yellow/green | | | | | |
| Variant | Tinned copper stranded wire | | | | | |
| Cross section | 1.5 mm² | | | | | |
| Shield | No | | | | | |
| Stranding | No | | | | | |
| Signal line | | | | | | |
| Quantity | 4 | | | | | |
| Wire insulation | Special thermoplastic material | | | | | |
| Wire colors | White, white/red, white/blue, white/green | | | | | |
| Variant | Tinned copper stranded wire | | | | | |
| Cross section | 0.75 mm² | | | | | |
| Shield | Individually shielded in pairs, tinned copper braiding, optical coverage > 85% and foil shield | | | | | |
| Stranding | White with white/red and white/blue with white/green | | | | | |
| Cable stranding | With filler elements and foil shield | | | | | |
| Cable shield | Tinned copper braiding, optical coverage > 85% and foil shield | | | | | |
| Outer jacket | | | | | | |
| Material | PUR | | | | | |
| Color | Orange, similar to RAL 2003 flat | | | | | |
| Labeling | BERNECKER & RAINER 4x1,5+2x2x0,75 FLEX | | | | | |
| **Connector** | | | | | | |
| Type | 8-pin female speedtec motor connector, size 1.0 | | | | | |
| Mating cycles | <500 | | | | | |
| Contacts | 8 (4 power and 4 signal contacts) | | | | | |
| Degree of protection per EN 60529 | IP67 when connected | | | | | |
| **Electrical properties** | | | | | | |
| Operating voltage | Max. 1000 V | | | | | |

Table 118: 8CM005.12-1, 8CM007.12-1, 8CM010.12-1, 8CM015.12-1, 8CM020.12-1, 8CM025.12-1 - Technical data

| Model number | 8CM005.12-1 | 8CM007.12-1 | 8CM010.12-1 | 8CM015.12-1 | 8CM020.12-1 | 8CM025.12-1 |
|---|---|---|---|---|---|---|
| Test voltage | | | | | | |
| Wire/Wire | 1500 VAC | | | | | |
| Wire/Shield | 1500 VAC | | | | | |
| Conductor resistance | | | | | | |
| Power lines | ≤0.07 Ω | ≤0.1 Ω | ≤0.14 Ω | ≤0.21 Ω | ≤0.28 Ω | ≤0.35 Ω |
| Signal line | ≤0.09 Ω | ≤0.13 Ω | ≤0.19 Ω | ≤0.29 Ω | ≤0.38 Ω | ≤0.48 Ω |
| Insulation resistance | >40 GΩ | >28.57 GΩ | >20 GΩ | >13.33 GΩ | >10 GΩ | >8 GΩ |
| Current-carrying capacity per DIN VDE 0298 part 4, table 11 | | | | | | |
| Wall mounting | 20 A | | | | | |
| Installed in conduit or cable duct | 17.8 A | | | | | |
| Installed in cable tray | 20.9 A | | | | | |
| **Ambient conditions** | | | | | | |
| Temperature | | | | | | |
| Moving | -10 to 70°C | | | | | |
| Static | -20 to 90°C | | | | | |
| **Mechanical properties** | | | | | | |
| Dimensions | | | | | | |
| Length | 5 m | 7 m | 10 m | 15 m | 20 m | 25 m |
| Diameter | 12.8 mm ±0.4 mm | | | | | |
| Bend radius | | | | | | |
| Single bend | >40 mm | | | | | |
| Moving | ≥99 mm | | | | | |
| Drag chain data | | | | | | |
| Acceleration | <60 m/s² | | | | | |
| Flex cycles | ≥3,000,000 | | | | | |
| Speed | ≤4 m/s | | | | | |
| Weight | 1.43 kg | 2 kg | 2.75 kg | 3.98 kg | 5.3 kg | 6.6 kg |

Table 118: 8CM005.12-1, 8CM007.12-1, 8CM010.12-1, 8CM015.12-1, 8CM020.12-1, 8CM025.12-1 - Technical data



Provided by Industrial Automation Co. • www.industrialautomationco.com • Parts & Repair: 877-727-8757

### 6.3.3 4 mm² motor cables

#### 6.3.3.1 Order data

| Model number | Short description | Figure |
|---|---|---|
| | **4 mm² motor cables** |  |
| 8CM005.12-3 | Motor cable, length 5 m, 4x 4 mm² + 2x 2x 1 mm², 8-pin female Intercontec motor connector, can be used in drag chains, UL/CSA listed | |
| 8CM007.12-3 | Motor cable, length 7 m, 4x 4 mm² + 2x 2x 1 mm², 8-pin female Intercontec motor connector, can be used in drag chains, UL/CSA listed | |
| 8CM010.12-3 | Motor cable, length 10 m, 4x 4 mm² + 2x 2x 1 mm², 8-pin female Intercontec motor connector, can be used in drag chains, UL/CSA listed | |
| 8CM015.12-3 | Motor cable, length 15 m, 4x 4 mm² + 2x 2x 1 mm², 8-pin female Intercontec motor connector, can be used in drag chains, UL/CSA listed | |
| 8CM020.12-3 | Motor cable, length 20 m, 4x 4 mm² + 2x 2x 1 mm², 8-pin female Intercontec motor connector, can be used in drag chains, UL/CSA listed | |
| 8CM025.12-3 | Motor cable, length 25 m, 4x 4 mm² + 2x 2x 1 mm², 8-pin female Intercontec motor connector, can be used in drag chains, UL/CSA listed | |

Table 119: 8CM005.12-3, 8CM007.12-3, 8CM010.12-3, 8CM015.12-3, 8CM020.12-3, 8CM025.12-3 - Order data

## Information:

**This cable assembly may be available in other lengths.**
**For a current overview, see the B&R website (4 mm² motor cables, can be used in cable drag chains).**

#### 6.3.3.2 Technical data

| Model number | 8CM005.12-3 | 8CM007.12-3 | 8CM010.12-3 | 8CM015.12-3 | 8CM020.12-3 | 8CM025.12-3 |
|---|---|---|---|---|---|---|
| **General information** | | | | | | |
| Cable cross section | 4x 4 mm² + 2x 2x 1 mm² | | | | | |
| Durability | Oil resistance according to VDE 0472 part 803 as well as standard hydraulic oil | | | | | |
| Listed | UL AWM Style 20234, 80°C, 1000 V, E63216 and CSA AWM I/II A/B, 90°C, 1000 V, FT2 LL46064 | | | | | |
| Certification | | | | | | |
| cULus | Yes | | | | | |
| **Cable construction** | | | | | | |
| Power lines | | | | | | |
| Quantity | 4 | | | | | |
| Wire insulation | Special thermoplastic material | | | | | |
| Wire colors | Black, brown, blue, yellow/green | | | | | |
| Design | Tinned copper litz wire | | | | | |
| Diameter | 4 mm² | | | | | |
| Shield | No | | | | | |
| Stranding | No | | | | | |
| Signal lines | | | | | | |
| Quantity | 4 | | | | | |
| Wire insulation | Special thermoplastic material | | | | | |
| Wire colors | White, white/red, white/blue, white/green | | | | | |
| Design | Tinned copper litz wire | | | | | |
| Diameter | 1 mm² | | | | | |
| Shield | Separate shielding for pairs, tinned copper mesh, optical coverage >85% and foil banding | | | | | |
| Stranding | White with white/red and white/blue with white/green | | | | | |
| Cable stranding | With filler elements and foil banding | | | | | |
| Complete shielding | Tinned copper mesh, optical coverage >85% and wrapped in isolating film | | | | | |
| Outer sheathing | | | | | | |
| Material | PUR | | | | | |
| Color | Orange, similar to RAL 2003 flat | | | | | |
| Labeling | BERNECKER & RAINER 4x4.0+2x2x1.0 FLEX | | | | | |
| **Connector** | | | | | | |
| Type | Intercontec 8-pin female motor connector | | | | | |
| Connection cycles | >50 | | | | | |
| Contacts | 8 (4 power and 4 signal contacts) | | | | | |
| EN 60529 protection | IP67 when connected | | | | | |
| **Electrical characteristics** | | | | | | |
| Operating voltage | Max. 1000 V | | | | | |
| Test voltage | | | | | | |
| Wire/Wire | 1500 VAC | | | | | |
| Wire/Shield | 1500 VAC | | | | | |

Table 120: 8CM005.12-3, 8CM007.12-3, 8CM010.12-3, 8CM015.12-3, 8CM020.12-3, 8CM025.12-3 - Technical data

| Model number | 8CM005.12-3 | 8CM007.12-3 | 8CM010.12-3 | 8CM015.12-3 | 8CM020.12-3 | 8CM025.12-3 |
|---|---|---|---|---|---|---|
| Conductor resistance | | | | | | |
| Power lines | ≤0.03 Ω | ≤0.04 Ω | ≤0.05 Ω | ≤0.08 Ω | ≤0.1 Ω | ≤0.13 Ω |
| Signal lines | ≤0.09 Ω | ≤0.13 Ω | ≤0.19 Ω | ≤0.28 Ω | ≤0.38 Ω | ≤0.48 Ω |
| Insulation resistance | >40 GΩ | >28.57 GΩ | >20 GΩ | >13.33 GΩ | >10 GΩ | >8 GΩ |
| Max. current load in accordance with IEC 60364-5-523 by installation type | | | | | | |
| Wall mounting | 36.4 A | | | | | |
| Installed in conduit or cable duct | 31.9 A | | | | | |
| Installed in cable tray | 38.2 A | | | | | |
| **Environmental conditions** | | | | | | |
| Temperature | | | | | | |
| Moving | -10 to 70°C | | | | | |
| Static | -20 to 90°C | | | | | |
| **Mechanical characteristics** | | | | | | |
| Dimensions | | | | | | |
| Length | 5 m | 7 m | 10 m | 15 m | 20 m | 25 m |
| Diameter | 15.8 mm ±0.5 mm | | | | | |
| Flex radius | | | | | | |
| Single bend | >50 mm | | | | | |
| Moving | ≥122 mm | | | | | |
| Drag chain data | | | | | | |
| Acceleration | <60 m/s² | | | | | |
| Flex cycles | ≥3,000,000 | | | | | |
| Velocity | ≤4 m/s | | | | | |
| Weight | 2.21 kg | 3 kg | 4.31 kg | 6.6 kg | 9 kg | 11.1 kg |

Table 120: 8CM005.12-3, 8CM007.12-3, 8CM010.12-3, 8CM015.12-3, 8CM020.12-3, 8CM025.12-3 - Technical data



Provided by Industrial Automation Co. • www.industrialautomationco.com • Parts & Repair: 877-727-8757

## 6.3.4 4 mm² motor cables with size 1.5 motor connector

### 6.3.4.1 Order data

| Model number | Short description | Figure |
|---|---|---|
| | **4 mm² motor cables with size 1.5 motor connector** | 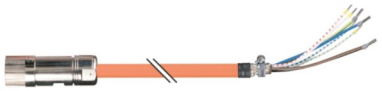 |
| 8CM005.19-3 | Motor cable, length 5 m, 4x 4 mm² + 2x 0.75 mm² + 2x 1 mm², 8-pin female Intercontec motor connector size 1.5, medium wire stripping length, can be used in cable drag chains | |
| 8CM007.19-3 | Motor cable, length 7 m, 4x 4 mm² + 2x 0.75 mm² + 2x 1 mm², 8-pin female Intercontec motor connector size 1.5, medium wire stripping length, can be used in cable drag chains | |
| 8CM010.19-3 | Motor cable, length 10 m, 4x 4 mm² + 2x 0.75 mm² + 2x 1 mm², 8-pin female Intercontec motor connector size 1.5, medium wire stripping length, can be used in cable drag chains | |
| 8CM015.19-3 | Motor cable, length 15 m, 4x 4 mm² + 2x 0.75 mm² + 2x 1 mm², 8-pin female Intercontec motor connector size 1.5, medium wire stripping length, can be used in cable drag chains | |
| 8CM020.19-3 | Motor cable, length 20 m, 4x 4 mm² + 2x 0.75 mm² + 2x 1 mm², 8-pin female Intercontec motor connector size 1.5, medium wire stripping length, can be used in cable drag chains | |
| 8CM025.19-3 | Motor cable, length 25 m, 4x 4 mm² + 2x 0.75 mm² + 2x 1 mm², 8-pin female Intercontec motor connector size 1.5, medium wire stripping length, can be used in cable drag chains | |

Table 121: 8CM005.19-3, 8CM007.19-3, 8CM010.19-3, 8CM015.19-3, 8CM020.19-3, 8CM025.19-3 - Order data

## Information:

**This cable assembly may be available in other lengths.**
**For a current overview, see the B&R website (4 mm² motor cables with size 1.5 motor connector).**

### 6.3.4.2 Technical data

| Model number | 8CM005.19-3 | 8CM007.19-3 | 8CM010.19-3 | 8CM015.19-3 | 8CM020.19-3 | 8CM025.19-3 |
|---|---|---|---|---|---|---|
| **General information** | | | | | | |
| Cable cross section | 4 x 4 mm² + 2 x 0.75 mm² + 2 x 1 mm² | | | | | |
| Durability | Oil resistance per HD 22.10 appendix A and DIN EN 60811-404 [1] | | | | | |
| Certification | E170315 cRUus AWM STYLE 21223 AWM I/II A/B 80°C 1000 V FT1 [1] | | | | | |
| Certifications | | | | | | |
| CE | Yes | | | | | |
| UL | cULus E225616<br>Power conversion equipment | | | | | |
| **Cable construction** | | | | | | |
| Power lines | | | | | | |
| Quantity | 4 | | | | | |
| Wire insulation | PP | | | | | |
| Wire colors | Black, brown, blue, yellow/green | | | | | |
| Variant | Tinned copper stranded wire | | | | | |
| Cross section | 4 mm² | | | | | |
| Shield | No | | | | | |
| Stranding | No | | | | | |
| Signal line | | | | | | |
| Quantity | 4 | | | | | |
| Wire insulation | PP | | | | | |
| Wire colors | White, white/red, white/blue, white/green | | | | | |
| Variant | Tinned copper stranded wire | | | | | |
| Cross section | 2 x 0.75 mm² + 2 x 1 mm² | | | | | |
| Shield | Individually shielded in pairs, tinned copper braiding, optical coverage > 85% and foil shield | | | | | |
| Stranding | White with white/red and white/blue with white/green | | | | | |
| Cable stranding | With filler elements and foil shield | | | | | |
| Cable shield | Tinned copper braiding, optical coverage > 85% and foil shield | | | | | |
| Outer jacket | | | | | | |
| Material | TPU | | | | | |
| Color | Orange, similar to RAL 2003 flat | | | | | |
| Labeling | B&R 4 G 4 + (2x0.75)C + (2x1)C C E170315 cRUus AWM STYLE 21223 AWM I/II A/B 80°C 1000 V FT1 [1] | | | | | |
| **Connector** | | | | | | |
| Type | Intercontec 8-pin female motor connector, size 1.5 | | | | | |
| Mating cycles | <500 | | | | | |
| Contacts | 8 (4 power and 4 signal contacts) | | | | | |
| Degree of protection per EN 60529 | IP66/67 when connected | | | | | |
| **Electrical properties** [1] | | | | | | |
| Operating voltage | Max. 1000 V AC (UL) | | | | | |

Table 122: 8CM005.19-3, 8CM007.19-3, 8CM010.19-3, 8CM015.19-3, 8CM020.19-3, 8CM025.19-3 - Technical data

| Model number | 8CM005.19-3 | 8CM007.19-3 | 8CM010.19-3 | 8CM015.19-3 | 8CM020.19-3 | 8CM025.19-3 |
|---|---|---|---|---|---|---|
| Test voltage | | | | | | |
| Wire/Wire | 4 kV | | | | | |
| Wire/Shield | 4 kV | | | | | |
| Conductor resistance | | | | | | |
| Power lines | ≤5.1 Ω/km | | | | | |
| Signal line | 0.75 mm²: ≤26.7 Ω/km, 1 mm²: ≤20 Ω/km | | | | | |
| Insulation resistance | ≥500 MΩ*km | | | | | |
| Current-carrying capacity per DIN VDE 0298 part 4, table 11 | | | | | | |
| Wall mounting | 30 A [2] | | | | | |
| Installed in conduit or cable duct | 30 A [2] | | | | | |
| Installed in cable tray | 30 A [2] | | | | | |
| **Ambient conditions [1]** | | | | | | |
| Temperature | | | | | | |
| Moving | -20°C to 80°C | | | | | |
| Static | -20°C to 90°C | | | | | |
| **Mechanical properties [1]** | | | | | | |
| Dimensions | | | | | | |
| Length | 5 m | 7 m | 10 m | 15 m | 20 m | 25 m |
| Diameter | 15.4 mm ±0.4 mm | | | | | |
| Bend radius | | | | | | |
| Single bend | >48 mm | | | | | |
| Moving | >119 mm | | | | | |
| Drag chain data | | | | | | |
| Acceleration | Max. 50 m/s² (depends on the length of the travel path) | | | | | |
| Flex cycles [3] | ≥5,000,000 | | | | | |
| Speed | Max. 300 m/min | | | | | |
| Weight | 1.4 kg | 1.9 kg | 2.8 kg | 4.2 kg | 5.5 kg | 6.9 kg |

Table 122: 8CM005.19-3, 8CM007.19-3, 8CM010.19-3, 8CM015.19-3, 8CM020.19-3, 8CM025.19-3 - Technical data

1) Values refer to the raw cable being used.
2) Limited to 30 A by the motor connector.
3) At an ambient temperature from -20°C to 60°C.



Provided by Industrial Automation Co. • www.industrialautomationco.com • Parts & Repair: 877-727-8757

## 6.3.5 10 mm² motor cables

### 6.3.5.1 Order data

| Model number | Short description | Figure |
|---|---|---|
| | **10 mm² motor cables** |  |
| 8CM005.12-5 | Motor cable, length 5 m, 4x 10 mm² + 2x 2x 1.5 mm², 8-pin female Intercontec motor connector, can be used in drag chains, UL/CSA listed | |
| 8CM007.12-5 | Motor cable, length 7 m, 4x 10 mm² + 2x 2x 1.5 mm², 8-pin female Intercontec motor connector, can be used in drag chains, UL/CSA listed | |
| 8CM010.12-5 | Motor cable, length 10 m, 4x 10 mm² + 2x 2x 1.5 mm², 8-pin female Intercontec motor connector, can be used in drag chains, UL/CSA listed | |
| 8CM015.12-5 | Motor cable, length 15 m, 4x 10 mm² + 2x 2x 1.5 mm², 8-pin female Intercontec motor connector, can be used in drag chains, UL/CSA listed | |
| 8CM020.12-5 | Motor cable, length 20 m, 4x 10 mm² + 2x 2x 1.5 mm², 8-pin female Intercontec motor connector, can be used in drag chains, UL/CSA listed | |
| 8CM025.12-5 | Motor cable, length 25 m, 4x 10 mm² + 2x 2x 1.5 mm², 8-pin female Intercontec motor connector, can be used in drag chains, UL/CSA listed | |

Table 123: 8CM005.12-5, 8CM007.12-5, 8CM010.12-5, 8CM015.12-5, 8CM020.12-5, 8CM025.12-5 - Order data

## Information:

**This cable assembly may be available in other lengths.**
**For a current overview, see the B&R website (10 mm² motor cables, can be used in cable drag chains).**

### 6.3.5.2 Technical data

| Model number | 8CM005.12-5 | 8CM007.12-5 | 8CM010.12-5 | 8CM015.12-5 | 8CM020.12-5 | 8CM025.12-5 |
|---|---|---|---|---|---|---|
| **General information** | | | | | | |
| Cable cross section | 4x 10 mm² + 2x 2x 1.5 mm² | | | | | |
| Durability | Oil resistance according to VDE 0472 part 803 as well as standard hydraulic oil | | | | | |
| Listed | UL AWM Style 20234, 80°C, 1000 V, E63216 and CSA AWM I/II A/B, 90°C, 1000 V, FT2 LL46064 | | | | | |
| Certification | | | | | | |
| cULus | Yes | | | | | |
| **Cable construction** | | | | | | |
| Power lines | | | | | | |
| Quantity | 4 | | | | | |
| Wire insulation | Special thermoplastic material | | | | | |
| Wire colors | Black, brown, blue, yellow/green | | | | | |
| Design | Tinned copper litz wire | | | | | |
| Diameter | 10 mm² | | | | | |
| Shield | No | | | | | |
| Stranding | No | | | | | |
| Signal lines | | | | | | |
| Quantity | 4 | | | | | |
| Wire insulation | Special thermoplastic material | | | | | |
| Wire colors | White, white/red, white/blue, white/green | | | | | |
| Design | Tinned copper litz wire | | | | | |
| Diameter | 1.5 mm² | | | | | |
| Shield | Separate shielding for pairs, tinned copper mesh, optical coverage >85% and foil banding | | | | | |
| Stranding | White with white/red and white/blue with white/green | | | | | |
| Cable stranding | With filler elements and foil banding | | | | | |
| Complete shielding | Tinned copper mesh, optical coverage >85% and wrapped in isolating film | | | | | |
| Outer sheathing | | | | | | |
| Material | PUR | | | | | |
| Color | Orange, similar to RAL 2003 flat | | | | | |
| Labeling | BERNECKER & RAINER 4x10,0+2x2x1.5 FLEX | | | | | |
| **Connector** | | | | | | |
| Type | Intercontec 8-pin female motor connector | | | | | |
| Connection cycles | >50 | | | | | |
| Contacts | 8 (4 power and 4 signal contacts) | | | | | |
| EN 60529 protection | IP67 when connected | | | | | |
| **Electrical characteristics** | | | | | | |
| Operating voltage | Max. 1000 V | | | | | |
| Test voltage | | | | | | |
| Wire/Wire | 1500 VAC | | | | | |
| Wire/Shield | 1500 VAC | | | | | |

Table 124: 8CM005.12-5, 8CM007.12-5, 8CM010.12-5, 8CM015.12-5, 8CM020.12-5, 8CM025.12-5 - Technical data

| Model number | 8CM005.12-5 | 8CM007.12-5 | 8CM010.12-5 | 8CM015.12-5 | 8CM020.12-5 | 8CM025.12-5 |
|---|---|---|---|---|---|---|
| Conductor resistance | | | | | | |
| Power lines | ≤0.01 Ω | | ≤0.02 Ω | ≤0.03 Ω | ≤0.04 Ω | ≤0.05 Ω |
| Signal lines | ≤0.07 Ω | ≤0.1 Ω | ≤0.14 Ω | ≤0.21 Ω | ≤0.28 Ω | ≤0.35 Ω |
| Insulation resistance | >40 GΩ | >28.57 GΩ | >20 GΩ | >13.33 GΩ | >10 GΩ | >8 GΩ |
| Max. current load in accordance with IEC 60364-5-523 by installation type | | | | | | |
| Wall mounting | 64.6 A | | | | | |
| Installed in conduit or cable duct | 54.6 A | | | | | |
| Installed in cable tray | 68.3 A | | | | | |
| **Environmental conditions** | | | | | | |
| Temperature | | | | | | |
| Moving | -10 to 70°C | | | | | |
| Static | -20 to 90°C | | | | | |
| **Mechanical characteristics** | | | | | | |
| Dimensions | | | | | | |
| Length | 5 m | 7 m | 10 m | 15 m | 20 m | 25 m |
| Diameter | 20.1 mm ±0.7 mm | | | | | |
| Flex radius | | | | | | |
| Single bend | >62 mm | | | | | |
| Moving | ≥156 mm | | | | | |
| Drag chain data | | | | | | |
| Acceleration | <60 m/s² | | | | | |
| Flex cycles | ≥3,000,000 | | | | | |
| Velocity | ≤4 m/s | | | | | |
| Weight | 4.29 kg | 6 kg | 8.3 kg | 12.2 kg | 16 kg | 19.9 kg |

Table 124: 8CM005.12-5, 8CM007.12-5, 8CM010.12-5, 8CM015.12-5, 8CM020.12-5, 8CM025.12-5 - Technical data



Provided by Industrial Automation Co. • www.industrialautomationco.com • Parts & Repair: 877-727-8757

## 6.3.6 35 mm² motor cables

### 6.3.6.1 Order data

| Model number | Short description | Figure |
|---|---|---|
| | **35 mm² motor cables** |  |
| 8CM005.12-8 | Motor cable, length 5 m, 4x 35 mm² + 2x 2x 1.5 mm², not assembled, can be used in drag chains, UL/CSA listed | |
| 8CM007.12-8 | Motor cable, length 7 m, 4x 35 mm² + 2x 2x 1.5 mm², not assembled, can be used in drag chains, UL/CSA listed | |
| 8CM010.12-8 | Motor cable, length 10 m, 4x 35 mm² + 2x 2x 1.5 mm², not assembled, can be used in drag chains, UL/CSA listed | |
| 8CM015.12-8 | Motor cable, length 15 m, 4x 35 mm² + 2x 2x 1.5 mm², not assembled, can be used in drag chains, UL/CSA listed | |
| 8CM020.12-8 | Motor cable, length 20 m, 4x 35 mm² + 2x 2x 1.5 mm², not assembled, can be used in drag chains, UL/CSA listed | |
| 8CM025.12-8 | Motor cable, length 25 m, 4x 35 mm² + 2x 2x 1.5 mm², not assembled, can be used in drag chains, UL/CSA listed | |

Table 125: 8CM005.12-8, 8CM007.12-8, 8CM010.12-8, 8CM015.12-8, 8CM020.12-8, 8CM025.12-8 - Order data

## Information:

**This cable assembly may be available in other lengths.**
**For a current overview, see the B&R website (35 mm² motor cables, can be used in cable drag chains).**

### 6.3.6.2 Technical data

| Model number | 8CM005.12-8 | 8CM007.12-8 | 8CM010.12-8 | 8CM015.12-8 | 8CM020.12-8 | 8CM025.12-8 |
|---|---|---|---|---|---|---|
| **General information** | | | | | | |
| Cable cross section | 4x 35 mm² + 2x (2x 1.5 mm²) C | | | | | |
| Durability | Oil resistance per HD 22.10 appendix A and DIN EN 60811-2-1 [1] | | | | | |
| Certification | E170315 cRUus AWM STYLE 21223 AWM I/II A/B 80°C 1000 V FT1 [1] | | | | | |
| Certifications | | | | | | |
| CE | Yes | | | | | |
| UL | cULus E225616<br>Power conversion equipment | | | | | |
| **Cable construction** | | | | | | |
| Power lines | | | | | | |
| Quantity | 4 | | | | | |
| Wire insulation | PP | | | | | |
| Wire colors | Black, yellow/green | | | | | |
| Variant | Tinned copper stranded wire | | | | | |
| Cross section | 35 mm² | | | | | |
| Shield | No | | | | | |
| Stranding | No | | | | | |
| Signal line | | | | | | |
| Quantity | 4 | | | | | |
| Wire insulation | PP | | | | | |
| Wire colors | Black | | | | | |
| Variant | Tinned copper stranded wire | | | | | |
| Cross section | 1.5 mm² | | | | | |
| Shield | Separate shielding for pairs, tinned copper braiding, optical coverage >85% and foil banding | | | | | |
| Stranding | White with white/red and white/blue with white/green | | | | | |
| Cable stranding | With filler elements | | | | | |
| Cable shield | Tinned copper braiding, optical coverage >85% | | | | | |
| Outer jacket | | | | | | |
| Material | TPU | | | | | |
| Color | Orange, similar to RAL 2003 flat | | | | | |
| Labeling | TS 121 4 G 35 + 2x (2x 1.5 C)C E170315 cRUus AWM STYLE 21223 AWM I/II A/B 80°C 1000 V FT1 [1] | | | | | |
| **Electrical properties** [1] | | | | | | |
| Operating voltage | Max. 1000 V AC (UL) | | | | | |
| Test voltage | | | | | | |
| Wire/Wire | 4 kV | | | | | |
| Wire/Shield | 4 kV | | | | | |
| Conductor resistance | | | | | | |
| Power lines | ≤0.6 Ω/km | | | | | |
| Signal line | ≤13.3 Ω/km | | | | | |
| Insulation resistance | ≥500 MΩ*km | | | | | |
| Current-carrying capacity per DIN VDE 0298 part 4, table 11 | | | | | | |
| Wall mounting | 133.8 A | | | | | |
| Installed in conduit or cable duct | 116.5 A | | | | | |
| Installed in cable tray | 143.8 A | | | | | |

Table 126: 8CM005.12-8, 8CM007.12-8, 8CM010.12-8, 8CM015.12-8, 8CM020.12-8, 8CM025.12-8 - Technical data

| Model number | 8CM005.12-8 | 8CM007.12-8 | 8CM010.12-8 | 8CM015.12-8 | 8CM020.12-8 | 8CM025.12-8 |
|---|---|---|---|---|---|---|
| **Ambient conditions** [1] | | | | | | |
| Temperature | | | | | | |
| Moving | -30°C to +80°C | | | | | |
| Static | -50°C to +80°C | | | | | |
| **Mechanical properties** [1] | | | | | | |
| Dimensions | | | | | | |
| Length | 5 m | 7 m | 10 m | 15 m | 20 m | 25 m |
| Diameter | 30.5 mm ± 0.5 mm | | | | | |
| Bend radius | | | | | | |
| Single bend | >124 mm | | | | | |
| Moving | ≥232.5 mm | | | | | |
| Drag chain data | | | | | | |
| Acceleration | Max. 50 m/s² (depends on the length of the travel path) | | | | | |
| Flex cycles [2] | ≤10,000,000 | | | | | |
| Speed | Max. 300 m/min | | | | | |
| Weight | 9.7 kg | 13.6 kg | 19.4 kg | 29 kg | 38.7 kg | 48.4 kg |

Table 126: 8CM005.12-8, 8CM007.12-8, 8CM010.12-8, 8CM015.12-8, 8CM020.12-8, 8CM025.12-8 - Technical data

1) Values refer to the raw cable being used.
2) At an ambient temperature from -20°C to +60°C.

## 6.3.7 Wiring

### 6.3.7.1 Cable construction

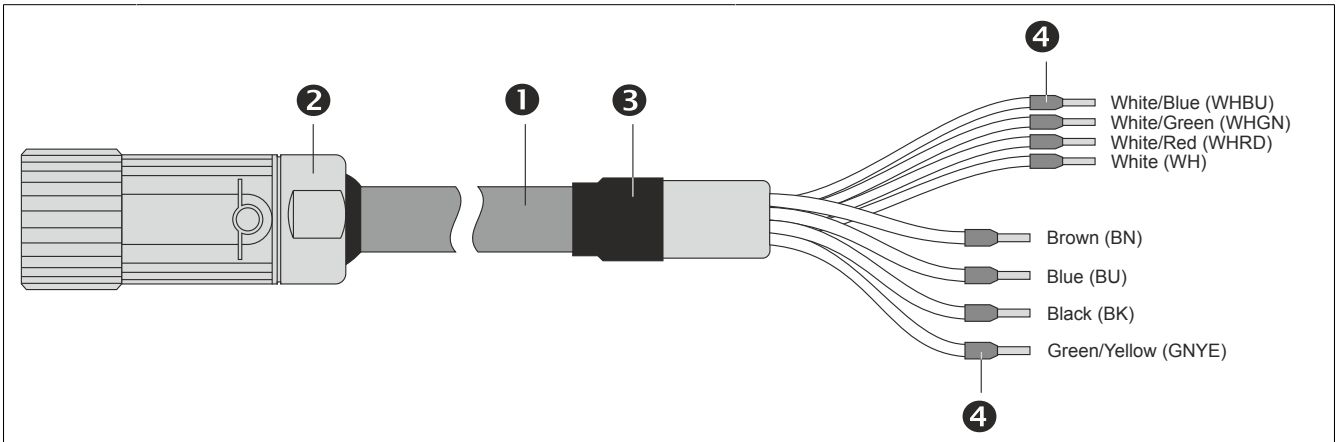


| Pos. | Description | Note |
|---|---|---|
| 1 | Motor line | 8CMxxx.12-0: 4x 0.75 mm² + 2x 2x 0.34 mm²<br>8CMxxx.12-1: 4x 1.5 mm² + 2x 2x 0.75 mm²<br>8CMxxx.12-3, 8CMxxx.19-3: 4x 4 mm² 2x 0.75 mm² + 2x 1 mm²<br>8CMxxx.12-5: 4x 10 mm² + 2x 0.75 mm² + 2x 1.5 mm² |
| 2 | 8-pin female circular connector | Dimensions<br>8CMxxx.12-0: ø 28 x 76 mm<br>8CMxxx.12-1: ø 28 x 76 mm<br>8CMxxx.12-3: ø 28 x 76 mm<br>8CMxxx.19-3: ø 46 x 93 mm<br>8CMxxx.12-5: ø 46 x 93 mm |
| 3 | Heat shrink tubing | |
| 4 | Wire end sleeves | |

Table 127: Motor cables - Cable construction

### 6.3.7.2 Pinout

#### 6.3.7.2.1 8CMxxx.12-0, 8CMxxx.12-1, 8CMxxx.12-3

| Circular connector | Pin | Description | Function |
|---|---|---|---|
| 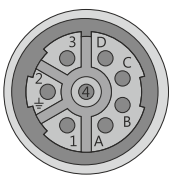 | 1 | U | Motor connection U |
| | 2 | PE | Protective ground conductor |
| | 3 | W | Motor connection W |
| | 4 | V | Motor connection V |
| | A | T+ | Temperature + |
| | B | T- | Temperature - |
| | C | B+ | Brake + |
| | D | B- | Brake - |



Table 128: 8CMxxx.12-0, 8CMxxx.12-1, 8CMxxx.12-3 motor cables - Pinout

#### 6.3.7.2.2 8CMxxx.19-3, 8CMxxx.12-5

| Circular connector | Pin | Description | Function |
|---|---|---|---|
| 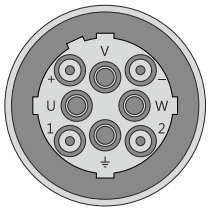 | U | U | Motor connection U |
| | ⏚ | PE | Protective ground conductor |
| | W | W | Motor connection W |
| | V | V | Motor connection V |
| | 1 | T+ | Temperature + |
| | 2 | T- | Temperature - |
| | + | B+ | Brake + |
| | - | B- | Brake - |



Table 129: 8CMxxx.19-3, 8CMxxx.12-5 motor cables - Pinout

### 6.3.7.3 Cable diagram

#### 6.3.7.3.1 8CMxxx.12-0

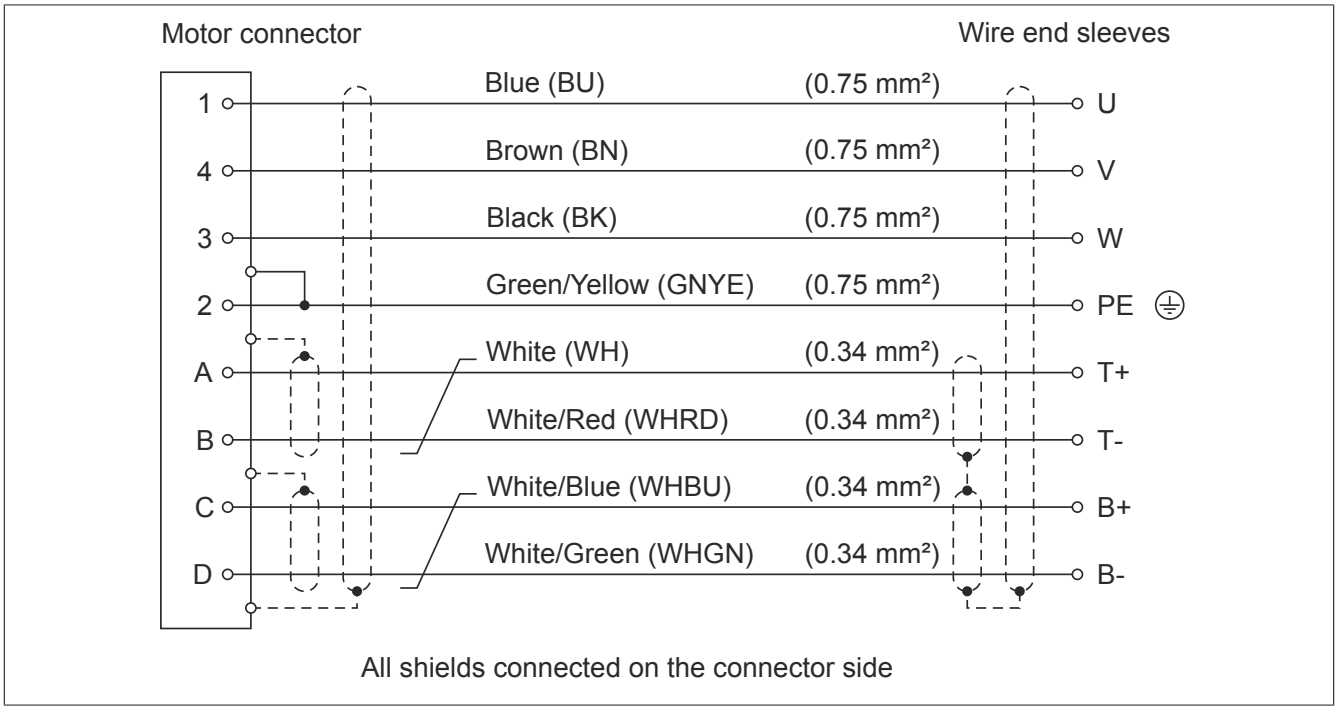


Figure 45: 8CMxxx.12-0 motor cables - Cable diagram



Provided by Industrial Automation Co. • www.industrialautomationco.com • Parts & Repair: 877-727-8757

### 6.3.7.3.2 8CMxxx.12-1, 8CMxxx.12-3

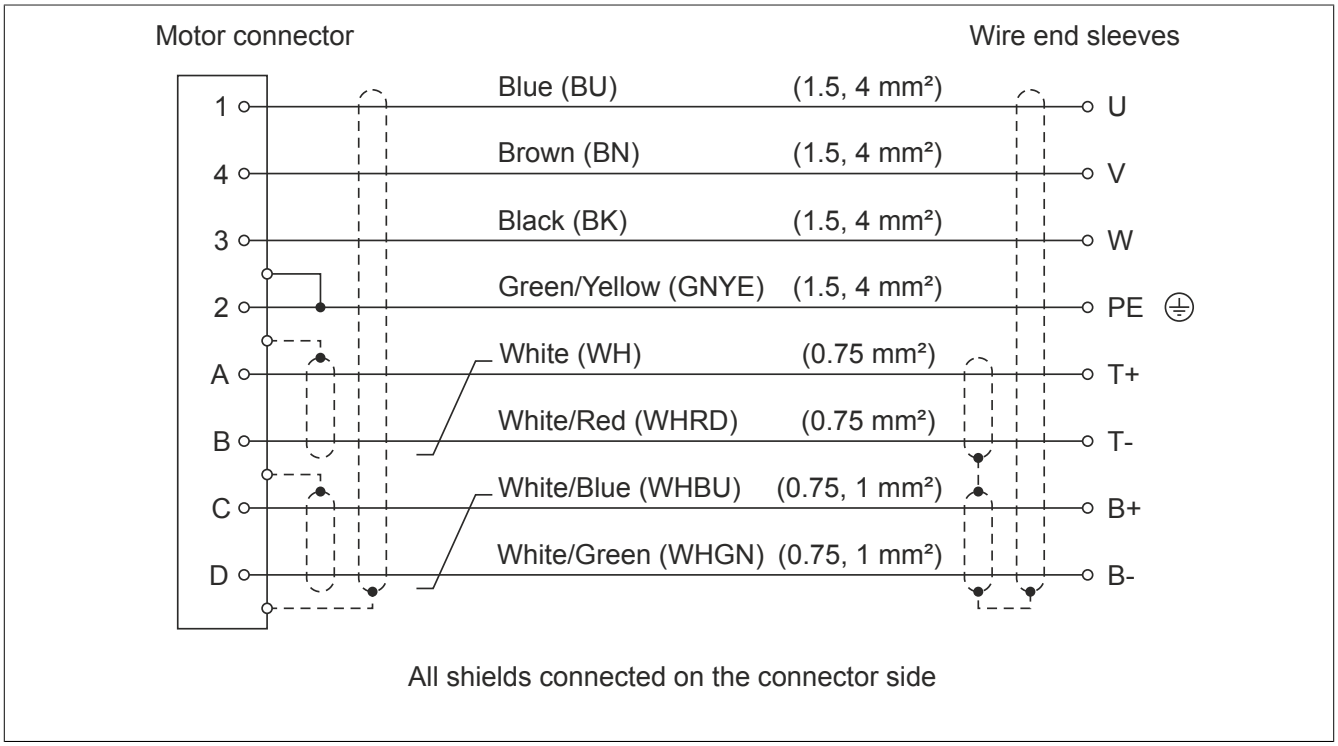


Figure 46: 8CMxxx.12-1, 8CMxxx.12-3 motor cables - Cable diagram

### 6.3.7.3.3 8CMxxx.19-3, 8CMxxx.12-5

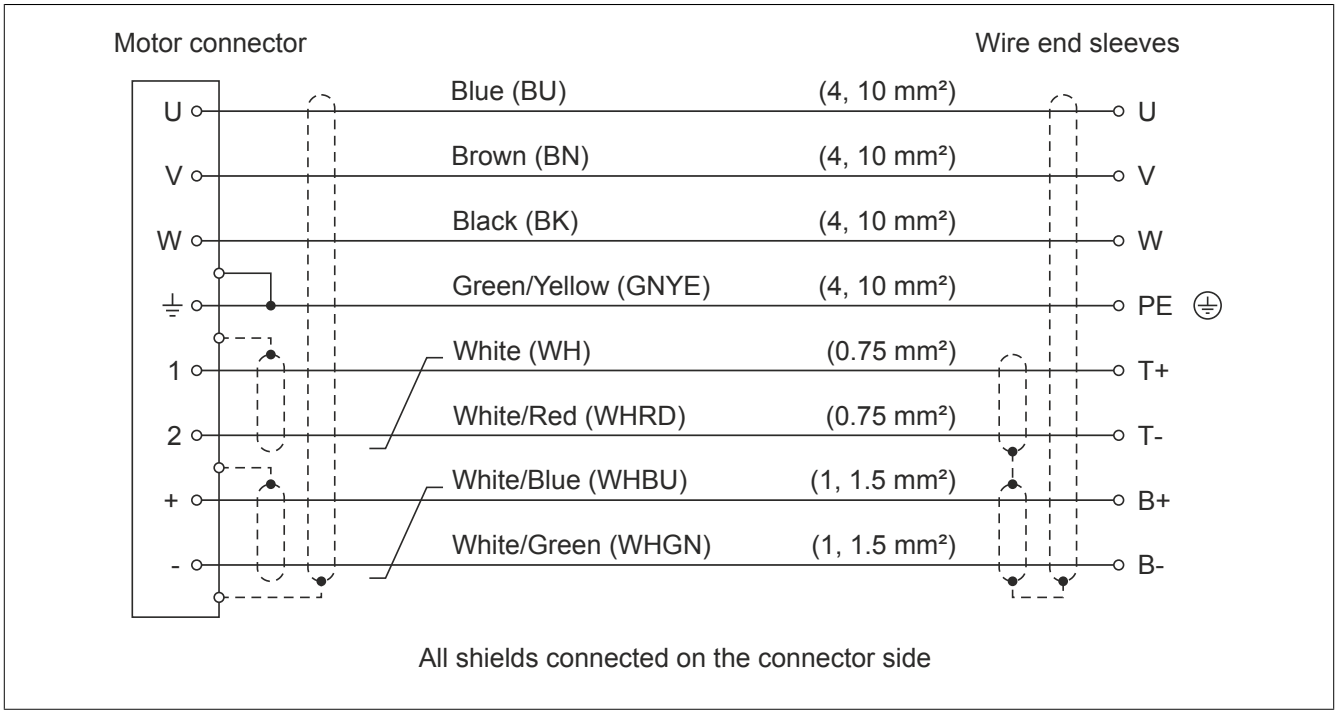


Figure 47: 8CMxxx.19-3, 8CMxxx.12-5 motor cables - Cable diagram



Provided by Industrial Automation Co. • www.industrialautomationco.com • Parts & Repair: 877-727-8757

## 6.4 8CH hybrid motor cables

### 6.4.1 1.5 mm² hybrid motor cables

#### 6.4.1.1 Order data

| Model number | Short description | Figure |
|---|---|---|
| | **1.5 mm² hybrid motor cable** |  |
| 8CH005.12-1 | ACOPOS hybrid motor cable, length 5 m, 4x 1.5 mm² + 2x 0.75 mm² + 2x 0.30 mm² + 2x 2x 0.15 mm², 13-pin female speedtec hybrid motor connector, can be used in cable drag chains | |
| 8CH007.12-1 | ACOPOS hybrid motor cable, length 7 m, 4x 1.5 mm² + 2x 0.75 mm² + 2x 0.30 mm² + 2x 2x 0.15 mm², 13-pin female speedtec hybrid motor connector, can be used in cable drag chains | |
| 8CH010.12-1 | ACOPOS hybrid motor cable, length 10 m, 4x 1.5 mm² + 2x 0.75 mm² + 2x 0.30 mm² + 2x 2x 0.15 mm², 13-pin female speedtec hybrid motor connector, can be used in cable drag chains | |
| 8CH015.12-1 | ACOPOS hybrid motor cable, length 15 m, 4x 1.5 mm² + 2x 0.75 mm² + 2x 0.30 mm² + 2x 2x 0.15 mm², 13-pin female speedtec hybrid motor connector, can be used in cable drag chains | |
| 8CH020.12-1 | ACOPOS hybrid motor cable, length 20 m, 4x 1.5 mm² + 2x 0.75 mm² + 2x 0.30 mm² + 2x 2x 0.15 mm², 13-pin female speedtec hybrid motor connector, can be used in cable drag chains | |
| 8CH025.12-1 | ACOPOS hybrid motor cable, length 25 m, 4x 1.5 mm² + 2x 0.75 mm² + 2x 0.30 mm² + 2x 2x 0.15 mm², 13-pin female speedtec hybrid motor connector, can be used in cable drag chains | |

Table 130: 8CH005.12-1, 8CH007.12-1, 8CH010.12-1, 8CH015.12-1, 8CH020.12-1, 8CH025.12-1 - Order data

## Information:

**This cable assembly may be available in other lengths.**
**For a current overview, see the B&R website (1.5 mm² hybrid motor cables, can be used in cable drag chains).**

#### 6.4.1.2 Technical data

| Product ID | 8CH005.12-1 | 8CH007.12-1 | 8CH010.12-1 | 8CH015.12-1 | 8CH020.12-1 | 8CH025.12-1 |
|---|---|---|---|---|---|---|
| **General information** | | | | | | |
| Cable cross section | 4x 1.5 mm² + 2x 0.75 mm² + (2x 1x 0.30 mm² + 2x 2x 0.15 mm²) | | | | | |
| Durability | Oil resistance per EN 60811-2-1[1)] | | | | | |
| Certification | UL AWM Style 21223, 80°C, 1000 V and CSA C22.2 No. 210 I/II A/B FT1[1)] | | | | | |
| Certifications | | | | | | |
| CE | Yes | | | | | |
| UL | cULus E225616<br>Power conversion equipment | | | | | |
| **Cable construction** | | | | | | |
| Power lines | | | | | | |
| Quantity | 4 | | | | | |
| Wire insulation | PP | | | | | |
| Wire colors | Black, brown, blue, yellow/green | | | | | |
| Variant | Copper stranded wire | | | | | |
| Cross section | 1.5 mm² | | | | | |
| Shield | No | | | | | |
| Stranding | No | | | | | |
| Supply lines | | | | | | |
| Quantity | 2 | | | | | |
| Wire insulation | PP | | | | | |
| Wire colors | White/Blue, white/green | | | | | |
| Variant | Tinned copper stranded wire | | | | | |
| Cross section | 0.75 mm² | | | | | |
| Shield | No | | | | | |
| Stranding | No | | | | | |
| Signal line | | | | | | |
| Quantity | 6 | | | | | |
| Wire insulation | PP | | | | | |
| Wire colors | Brown/Green, white/green, gray/pink, yellow/violet | | | | | |
| Variant | 2x copper stranded wire, 4x tinned copper stranded wire | | | | | |
| Cross section | 2x 0.30 mm², 4x 0.15 mm² | | | | | |
| Shield | Tinned copper braiding, optical coverage > 85% and foil shield | | | | | |
| Stranding | Brown/Green with white/green, pink with gray and yellow with violet | | | | | |
| Cable stranding | With filler elements and foil shield | | | | | |
| Cable shield | Tinned copper braiding, optical coverage > 85% and foil shield | | | | | |

Table 131: 8CH005.12-1, 8CH007.12-1, 8CH010.12-1, 8CH015.12-1, 8CH020.12-1, 8CH025.12-1 - Technical data

| Product ID | 8CH005.12-1 | 8CH007.12-1 | 8CH010.12-1 | 8CH015.12-1 | 8CH020.12-1 | 8CH025.12-1 |
|---|---|---|---|---|---|---|
| Outer jacket | | | | | | |
| Material | PUR | | | | | |
| Color | Orange, similar to RAL 2003 flat | | | | | |
| Labeling | B&R 4x1.5 + 2x0.75 + (2x2x26AWG + 2x1x23AWG) * E130266 * cRUus AWM STYLE 21223 * AWM I/II A/B 80°C 1000 V FT1[1)] | | | | | |
| **Connector** | | | | | | |
| Type | 13-pin female speedtec hybrid motor connector | | | | | |
| Mating cycles | <500 | | | | | |
| Contacts | 13 | | | | | |
| Additional connectors | 9-pin male DSUB connector<br>Mating cycles: <200<br>Contacts: 9<br>Degree of protection per EN 60529: IP20 when connected | | | | | |
| Degree of protection per EN 60529 | IP66/67 when connected | | | | | |
| **Electrical properties[1)]** | | | | | | |
| Test voltage | | | | | | |
| Wire/Wire | 4 kV | | | | | |
| Wire/Shield | 4 kV | | | | | |
| Conductor resistance | | | | | | |
| Power lines | ≤13.3 Ω/km | | | | | |
| Supply lines | ≤26 Ω/km | | | | | |
| Signal line | 0.30 mm²: ≤68 Ω/km, 0.15 mm²: ≤140 Ω/km | | | | | |
| Insulation resistance | ≥200 MΩ*km | | | | | |
| Current-carrying capacity per DIN VDE 0298 part 4, table 11 | | | | | | |
| Wall mounting | 20.2 A | | | | | |
| Installed in conduit or cable duct | 17.8 A | | | | | |
| Installed in cable tray | 20.9 A | | | | | |
| **Ambient conditions[1)]** | | | | | | |
| Temperature | | | | | | |
| Moving | -20°C to 90°C | | | | | |
| Static | -20°C to 90°C | | | | | |
| **Mechanical properties[1)]** | | | | | | |
| Dimensions | | | | | | |
| Length | 5 m | 7 m | 10 m | 15 m | 20 m | 25 m |
| Diameter | 13 mm ± 0.4 mm | | | | | |
| Bend radius | | | | | | |
| Single bend | >40 mm | | | | | |
| Moving | ≥100 mm | | | | | |
| Drag chain data | | | | | | |
| Acceleration | Max. 50 m/s² (depends on the length of the travel path) | | | | | |
| Flex cycles | ≥3,000,000 | | | | | |
| Speed | Max. 300 m/min | | | | | |
| Weight | 1.2 kg | 1.7 kg | 2.4 kg | 3.6 kg | 4.8 kg | 5.9 kg |

Table 131: 8CH005.12-1, 8CH007.12-1, 8CH010.12-1, 8CH015.12-1, 8CH020.12-1, 8CH025.12-1 - Technical data

1) Values refer to the raw cable being used.



Provided by Industrial Automation Co. • www.industrialautomationco.com • Parts & Repair: 877-727-8757

## 6.4.2 4 mm² hybrid motor cables

### 6.4.2.1 Order data

| Model number | Short description | Figure |
|---|---|---|
| | **4 mm² hybrid motor cables** |  |
| 8CH005.12-3 | ACOPOS hybrid motor cable, length 5 m, 4x 4 mm² + 2x 1 mm² + 2x 0.30 mm² + 2x 2x 0.15 mm², 13-pin female speedtec hybrid motor connector, can be used in cable drag chains | |
| 8CH007.12-3 | ACOPOS hybrid motor cable, length 7 m, 4x 4 mm² + 2x 1 mm² + 2x 0.30 mm² + 2x 2x 0.15 mm², 13-pin female speedtec hybrid motor connector, can be used in cable drag chains | |
| 8CH010.12-3 | ACOPOS hybrid motor cable, length 10 m, 4x 4 mm² + 2x 1 mm² + 2x 0.30 mm² + 2x 2x 0.15 mm², 13-pin female speedtec hybrid motor connector, can be used in cable drag chains | |
| 8CH015.12-3 | ACOPOS hybrid motor cable, length 15 m, 4x 4 mm² + 2x 1 mm² + 2x 0.30 mm² + 2x 2x 0.15 mm², 13-pin female speedtec hybrid motor connector, can be used in cable drag chains | |
| 8CH020.12-3 | ACOPOS hybrid motor cable, length 20 m, 4x 4 mm² + 2x 1 mm² + 2x 0.30 mm² + 2x 2x 0.15 mm², 13-pin female speedtec hybrid motor connector, can be used in cable drag chains | |
| 8CH025.12-3 | ACOPOS hybrid motor cable, length 25 m, 4x 4 mm² + 2x 1 mm² + 2x 0.30 mm² + 2x 2x 0.15 mm², 13-pin female speedtec hybrid motor connector, can be used in cable drag chains | |

Table 132: 8CH005.12-3, 8CH007.12-3, 8CH010.12-3, 8CH015.12-3, 8CH020.12-3, 8CH025.12-3 - Order data

## Information:

**This cable assembly may be available in other lengths.**
**For a current overview, see the B&R website (4 mm² hybrid motor cables, can be used in cable drag chains).**

### 6.4.2.2 Technical data

| Model number | 8CH005.12-3 | 8CH007.12-3 | 8CH010.12-3 | 8CH015.12-3 | 8CH020.12-3 | 8CH025.12-3 |
|---|---|---|---|---|---|---|
| **General information** | | | | | | |
| Cable cross section | 4x 4 mm² + 2x 1 mm² + (2x 1x 0.30 mm² + 2x 2x 0.15 mm²) | | | | | |
| Durability | Oil resistance per EN 60811-2-1 [1)] | | | | | |
| Certification | E130266 cRUus AWM Style 21223, 80°C, 1000 V and CSA C22.2 No. 210 I/II A/B FT1 [1)] | | | | | |
| Certifications | | | | | | |
| CE | Yes | | | | | |
| UL | cULus E225616<br>Power conversion equipment | | | | | |
| **Cable construction** | | | | | | |
| Power lines | | | | | | |
| Quantity | 4 | | | | | |
| Wire insulation | PP | | | | | |
| Wire colors | Black, brown, blue, yellow/green | | | | | |
| Variant | Copper stranded wire | | | | | |
| Cross section | 4 mm² | | | | | |
| Shield | No | | | | | |
| Stranding | No | | | | | |
| Supply lines | | | | | | |
| Quantity | 2 | | | | | |
| Wire insulation | PP | | | | | |
| Wire colors | White/Blue, white/green | | | | | |
| Variant | Tinned copper stranded wire | | | | | |
| Cross section | 1 mm² | | | | | |
| Shield | No | | | | | |
| Stranding | No | | | | | |
| Signal line | | | | | | |
| Quantity | 6 | | | | | |
| Wire insulation | PP | | | | | |
| Wire colors | Brown/Green, white/green, gray/pink, yellow/violet | | | | | |
| Variant | 2x copper stranded wire, 4x tinned copper stranded wire | | | | | |
| Cross section | 2x 0.30 mm², 4x 0.15 mm² | | | | | |
| Shield | Tinned copper braiding, optical coverage > 85% and foil shield | | | | | |
| Stranding | Brown/Green with white/green, pink with gray and yellow with violet | | | | | |
| Cable stranding | With filler elements and foil shield | | | | | |
| Cable shield | Tinned copper braiding, optical coverage > 85% and foil shield | | | | | |

Table 133: 8CH005.12-3, 8CH007.12-3, 8CH010.12-3, 8CH015.12-3, 8CH020.12-3, 8CH025.12-3 - Technical data

| Model number | 8CH005.12-3 | 8CH007.12-3 | 8CH010.12-3 | 8CH015.12-3 | 8CH020.12-3 | 8CH025.12-3 |
|---|---|---|---|---|---|---|
| Outer jacket | | | | | | |
| Material | PUR | | | | | |
| Color | Orange, similar to RAL 2003 flat | | | | | |
| Labeling | B&R 4x4 + 2x1 + (2x2 26AWG + 2x1x 23AWG) *E130266* cRU-us AWM STYLE 21223* AWM I/II A/B 80°C 1000 V FT1 [1] | | | | | |
| **Connector** | | | | | | |
| Type | 13-pin female speedtec hybrid motor connector | | | | | |
| Mating cycles | <500 | | | | | |
| Contacts | 13 | | | | | |
| Additional connectors | 9-pin male DSUB connector<br>Mating cycles: <200<br>Contacts: 9<br>Degree of protection per EN 60529: IP20 when connected | | | | | |
| Degree of protection per EN 60529 | IP66/67 when connected | | | | | |
| **Electrical properties [1]** | | | | | | |
| Test voltage | | | | | | |
| Wire/Wire | 4 kV | | | | | |
| Wire/Shield | 4 kV | | | | | |
| Conductor resistance | | | | | | |
| Power lines | ≤5 Ω/km | | | | | |
| Supply lines | ≤19.5 Ω/km | | | | | |
| Signal line | 0.30 mm²: ≤68 Ω/km, 0.15 mm²: ≤140 Ω/km | | | | | |
| Insulation resistance | ≥200 MΩ*km | | | | | |
| Current-carrying capacity per DIN VDE 0298 part 4, table 11 | | | | | | |
| Wall mounting | 30 A [2] | | | | | |
| Installed in conduit or cable duct | 30 A [2] | | | | | |
| Installed in cable tray | 30 A [2] | | | | | |
| **Ambient conditions [1]** | | | | | | |
| Temperature | | | | | | |
| Moving | -20°C to 90°C | | | | | |
| Static | -20°C to 90°C | | | | | |
| **Mechanical properties [1]** | | | | | | |
| Dimensions | | | | | | |
| Length | 5 m | 7 m | 10 m | 15 m | 20 m | 25 m |
| Diameter | 15.7 mm ± 0.4 mm | | | | | |
| Bend radius | | | | | | |
| Single bend | >48 mm | | | | | |
| Moving | ≥121 mm | | | | | |
| Drag chain data | | | | | | |
| Acceleration | Max. 50 m/s² (depends on the length of the travel path) | | | | | |
| Flex cycles | ≥3,000,000 | | | | | |
| Speed | Max. 300 m/min | | | | | |
| Weight | 1.9 kg | 2.7 kg | 3.9 kg | 5.8 kg | 7.7 kg | 9.6 kg |

Table 133: 8CH005.12-3, 8CH007.12-3, 8CH010.12-3, 8CH015.12-3, 8CH020.12-3, 8CH025.12-3 - Technical data

1) Values refer to the raw cable being used.
2) Limited to 30 A by the hybrid motor connector.



Provided by Industrial Automation Co. • www.industrialautomationco.com • Parts & Repair: 877-727-8757

### 6.4.3 Wiring

#### 6.4.3.1 Cable construction

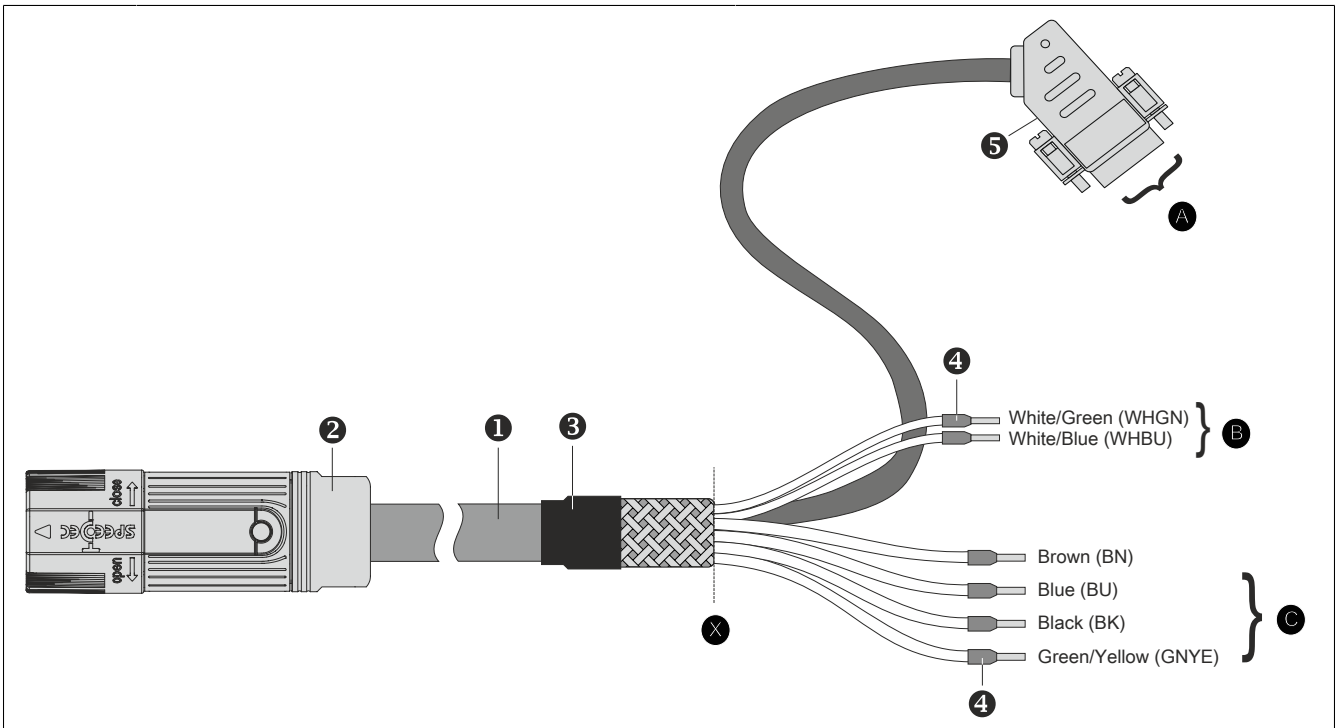


| Pos. | Description | Note |
|---|---|---|
| 1 | Hybrid cable | For 8CHxxx.12-1:<br>4x 1.5 mm² + 2x 0.75 mm² + (2x 0.30 mm² + 2x 2x 0.15 mm²)<br>For 8CHxxx.12-3:<br>4x 4 mm² + 2x 1 mm² + (2x 0.30 mm² + 2x 2x 0.15 mm²) |
| 2 | 13-pin female speedtec hybrid motor connector | Dimensions: ø 28 x 80 mm |
| 3 | Heat shrink tubing | |
| 4 | Wire end sleeves | |
| 5 | DSUB housing, 9-pin male | Dimensions: 31 x 15 x 40 mm |

Table 134: Hybrid motor cables - Cable construction

| Pos. | Quantity | Custom cable length from point x | |
|---|---|---|---|
| | | for 8CHxxx.12-1 (1.5 mm²) | for 8CHxxx.12-3 (4 mm²) |
| A | 1 | 380 mm | 380 mm |
| B | 2 | 75 mm | 150 mm |
| C | 4 | 65 mm | 90 mm |

Table 135: Custom cable length

#### 6.4.3.2 Pinout

| Circular connector | Pin | Description | Function | Pin | DSUB connector |
|---|---|---|---|---|---|
| 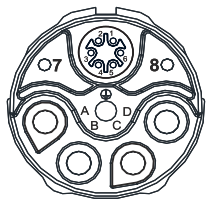 | 6 | T\ | Clock output inverted | 9 | 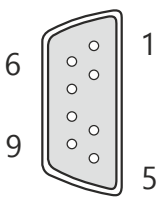 |
| | 1 | U+ | Encoder power supply +12 V | 1 | |
| | 2 | COM | Encoder power supply 0 V | 6 | |
| | 3 | D | Data | 4 | |
| | 4 | D\ | Data inverted | 8 | |
| | 5 | T | Clock output | 5 | |
| | 7 | B- | Brake 0 V | - | |
| | 8 | B+ | Brake +24 V | - | |
| | A | U | Motor connection U | - | |
| | B | V | Motor connection V | - | |
| | C | W | Motor connection W | - | |
| | D | - | - | - | |
| | ⏚ | PE | Protective ground conductor | - | |

Table 136: Hybrid motor cables - Pinout

### 6.4.3.3 Cable diagram

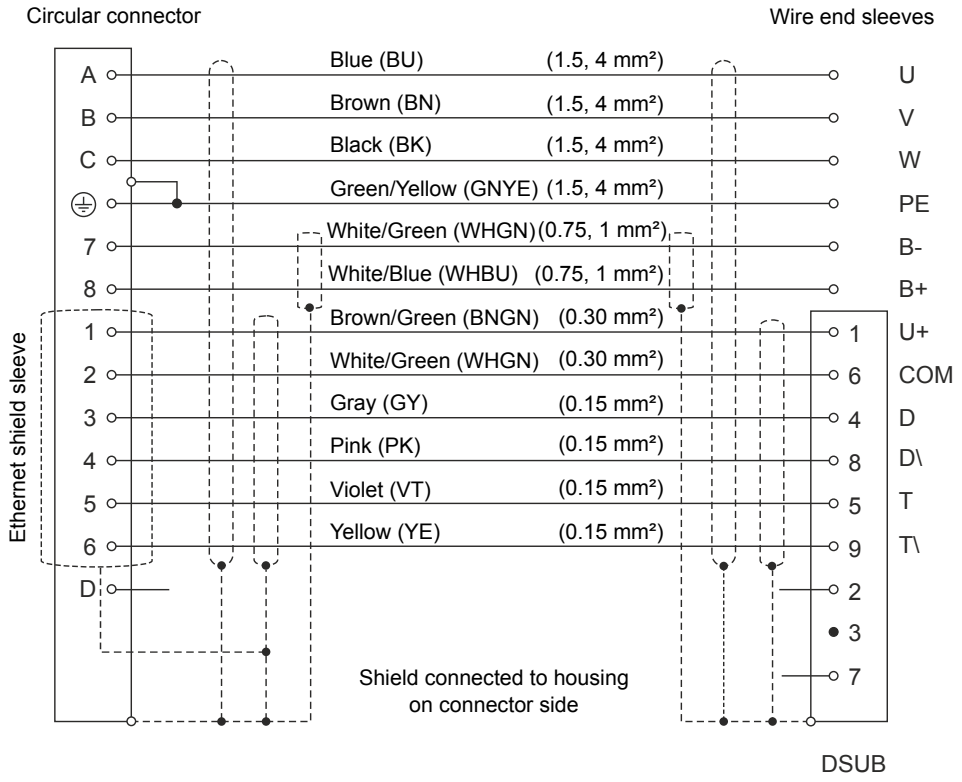


Figure 48: Hybrid motor cables - Cable diagram



Provided by Industrial Automation Co. • www.industrialautomationco.com • Parts & Repair: 877-727-8757

## 6.5 EnDat 2.1 cables

### 6.5.1 Order data

| Model number | Short description | Figure |
|---|---|---|
| | **EnDat 2.1 cables** | 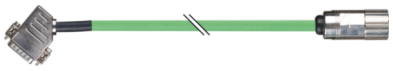 |
| 8CE005.12-1 | EnDat 2.1 cable, length 5 m, 10x 0.14 mm² + 2x 0.5 mm², Intercontec 17-pin female EnDat connector, 15-pin male DSUB servo connector, can be used in cable drag chains, UL/CSA listed | |
| 8CE007.12-1 | EnDat 2.1 cable, length 7 m, 10x 0.14 mm² + 2x 0.5 mm², Intercontec 17-pin female EnDat connector, 15-pin male DSUB servo connector, can be used in cable drag chains, UL/CSA listed | |
| 8CE010.12-1 | EnDat 2.1 cable, length 10 m, 10x 0.14 mm² + 2x 0.5 mm², Intercontec 17-pin female EnDat connector, 15-pin male DSUB servo connector, can be used in cable drag chains, UL/CSA listed | |
| 8CE015.12-1 | EnDat 2.1 cable, length 15 m, 10x 0.14 mm² + 2x 0.5 mm², Intercontec 17-pin female EnDat connector, 15-pin male DSUB servo connector, can be used in cable drag chains, UL/CSA listed | |
| 8CE020.12-1 | EnDat 2.1 cable, length 20 m, 10x 0.14 mm² + 2x 0.5 mm², Intercontec 17-pin female EnDat connector, 15-pin male DSUB servo connector, can be used in cable drag chains, UL/CSA listed | |
| 8CE025.12-1 | EnDat 2.1 cable, length 25 m, 10x 0.14 mm² + 2x 0.5 mm², Intercontec 17-pin female EnDat connector, 15-pin male DSUB servo connector, can be used in cable drag chains, UL/CSA listed | |

Table 137: 8CE005.12-1, 8CE007.12-1, 8CE010.12-1, 8CE015.12-1, 8CE020.12-1, 8CE025.12-1 - Order data

## Information:

**This cable assembly may be available in other lengths.**
**For a current overview, see the B&R website (EnDat 2.1 cables).**

### 6.5.2 Technical data

| Model number | 8CE005.12-1 | 8CE007.12-1 | 8CE010.12-1 | 8CE015.12-1 | 8CE020.12-1 | 8CE025.12-1 |
|---|---|---|---|---|---|---|
| **General information** | | | | | | |
| Cable cross section | 5x 2x 0.14 mm² + 1x 2x 0.50 mm² | | | | | |
| Durability | Oil resistance per VDE 0472 Part 803 as well as standard hydraulic oils [1] | | | | | |
| Certification | UL AWM Style 20963, 80°C, 30 V, E63216 and CSA AWM I/II A/B, 90°C, 30 V, FT1 LL46064 [1] | | | | | |
| Certifications | | | | | | |
| CE | Yes | | | | | |
| UL | cULus E225616<br>Power conversion equipment | | | | | |
| **Cable construction** | | | | | | |
| Supply lines | | | | | | |
| Quantity | 2 | | | | | |
| Wire insulation | Special thermoplastic material | | | | | |
| Wire colors | White/Green, white/red | | | | | |
| Variant | Tinned copper stranded wire | | | | | |
| Cross section | 0.5 mm² | | | | | |
| Shield | No | | | | | |
| Stranding | White/Red with white/green and filler elements | | | | | |
| Signal line | | | | | | |
| Quantity | 10 | | | | | |
| Wire insulation | Special thermoplastic material | | | | | |
| Wire colors | Blue, brown, yellow, gray, green, pink, red, black, violet, white | | | | | |
| Variant | Tinned copper stranded wire | | | | | |
| Cross section | 0.14 mm² | | | | | |
| Shield | No | | | | | |
| Stranding | Green with brown, gray with yellow, white with violet, black with red, pink with blue | | | | | |
| Cable stranding | With foil shield | | | | | |
| Cable shield | Copper braiding, optical coverage >85% and wrapped in foil shield | | | | | |
| Outer jacket | | | | | | |
| Material | PUR | | | | | |
| Color | Green, similar to RAL 6018 flat | | | | | |
| Labeling | BERNECKER + RAINER 5x2x0.14+2x0.50 FLEX UL AWM STYLE<br>20963 80°C 30 V E63216 CSA AWM I/II A/B 90°C 30 V FT1 LL46064 [1] | | | | | |
| **Connector** | | | | | | |
| Type | 17-pin female Intercontec EnDat connector | | | | | |
| Mating cycles | <500 | | | | | |
| Contacts | 17 | | | | | |
| Additional connectors | 15-pin male DSUB servo connector<br>Connection cycles: <200<br>Contacts: 15<br>Degree of protection per EN 60529: IP20 when connected | | | | | |

Table 138: 8CE005.12-1, 8CE007.12-1, 8CE010.12-1, 8CE015.12-1, 8CE020.12-1, 8CE025.12-1 - Technical data

| Model number | 8CE005.12-1 | 8CE007.12-1 | 8CE010.12-1 | 8CE015.12-1 | 8CE020.12-1 | 8CE025.12-1 |
|---|---|---|---|---|---|---|
| Degree of protection per EN 60529 | IP66/67 when connected | | | | | |
| **Electrical properties** [1] | | | | | | |
| Operating voltage | ≤30 $V_{eff}$ | | | | | |
| Test voltage | | | | | | |
| Wire/Wire | 1 kV | | | | | |
| Wire/Shield | 0.8 kV | | | | | |
| Conductor resistance | | | | | | |
| Supply lines | ≤40 Ω/km | | | | | |
| Signal line | ≤140 Ω/km | | | | | |
| Insulation resistance | >200 MΩ*km | | | | | |
| **Ambient conditions** [1] | | | | | | |
| Temperature | | | | | | |
| Moving | -20°C to +80°C | | | | | |
| Static | -20°C to +90°C | | | | | |
| **Mechanical properties** [1] | | | | | | |
| Dimensions | | | | | | |
| Length | 5 m | 7 m | 10 m | 15 m | 20 m | 25 m |
| Diameter | 7.85 mm ± 0.2 mm | | | | | |
| Bend radius | | | | | | |
| Single bend | ≥24 mm | | | | | |
| Moving | ≥60 mm | | | | | |
| Drag chain data | | | | | | |
| Acceleration | ≤6 g | | | | | |
| Flex cycles [2] | >3,000,000 | | | | | |
| Speed | ≤4 m/s | | | | | |
| Weight | 0.4 kg | 0.56 kg | 0.8 kg | 1.2 kg | 1.6 kg | 2 kg |

Table 138: 8CE005.12-1, 8CE007.12-1, 8CE010.12-1, 8CE015.12-1, 8CE020.12-1, 8CE025.12-1 - Technical data

1) Values refer to the raw cable being used.
2) At an ambient temperature of 20°C and bend radius of 65 mm.

## 6.5.3 Wiring

### 6.5.3.1 construction

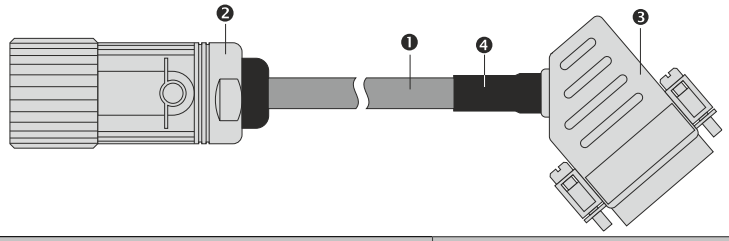


| Pos. | Description | Note |
|---|---|---|
| 1 | Encoder line | 5x 2x 0.14 mm² + 2x 0.5 mm² |
| 2 | 17-pin female circular connector | Dimensions: ø 21 x 54 mm |
| 3 | DSUB housing 45°, metal-plated, 15-pin male connector | Dimensions: 31 x 15 x 40 mm |
| 4 | Heat shrink tubing | |

Table 139: EnDat 2.1 cables - Construction

### 6.5.3.2 Pinout

| Circular connector | Pin | Description | Function | Pin | DSUB connector |
|---|---|---|---|---|---|
| 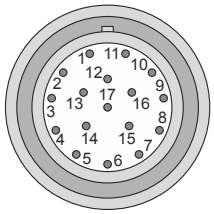 | 15 | A | Channel A | 1 | 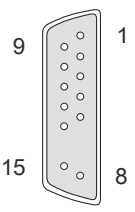 |
| | 10 | COM (1, 3 - 9, 11, 13 - 15) | Encoder power supply 0 V | 2 | |
| | 12 | B | Channel B | 3 | |
| | 7 | +5 V out / 0.25 A | Encoder power supply +5 V | 4 | |
| | 14 | B | Data input | 5 | |
| | 8 | T | Clock output | 8 | |
| | 16 | A\ | Channel A inverted | 9 | |
| | 4 | Sense COM | Sense input 0 V | 10 | |
| | 13 | B\ | Channel B inverted | 11 | |
| | 1 | Sense +5 V | Sense input +5 V | 12 | |
| | 17 | D\ | Data inverted | 13 | |
| | 9 | T\ | Clock output inverted | 15 | |



Table 140: EnDat 2.1 cables - Pinout

### 6.5.3.3 Cable diagram

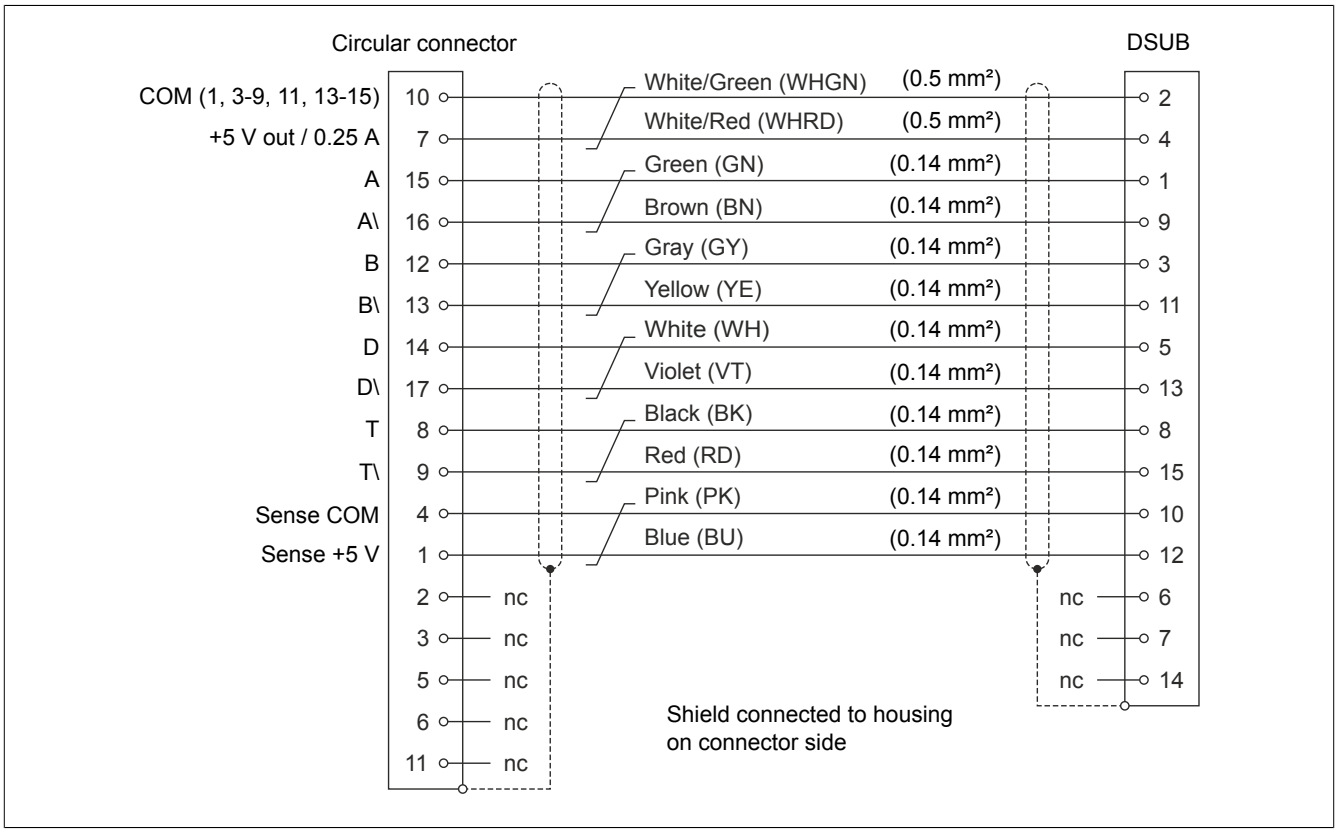


Figure 49: EnDat 2.1 cables - Cable diagram



Provided by Industrial Automation Co. • www.industrialautomationco.com • Parts & Repair: 877-727-8757

## 6.6 Resolver cables

### 6.6.1 Order data

| Model number | Short description | Figure |
|---|---|---|
| | **Resolver cables** |  |
| 8CR005.12-1 | Resolver cable, length 5 m, 3x 2x AWG 24 (19x 0.127), Intercontec 12-pin female resolver connector, 9-pin male DSUB servo connector, can be used in cable drag chains, UL/CSA listed | |
| 8CR007.12-1 | Resolver cable, length 7 m, 3x 2x AWG 24 (19x 0.127), Intercontec 12-pin female resolver connector, 9-pin male DSUB servo connector, can be used in cable drag chains, UL/CSA listed | |
| 8CR010.12-1 | Resolver cable, length 10 m, 3x 2x AWG 24 (19x 0.127), Intercontec 12-pin female resolver connector, 9-pin male DSUB servo connector, can be used in cable drag chains, UL/CSA listed | |
| 8CR015.12-1 | Resolver cable, length 15 m, 3x 2x AWG 24 (19x 0.127), Intercontec 12-pin female resolver connector, 9-pin male DSUB servo connector, can be used in cable drag chains, UL/CSA listed | |
| 8CR020.12-1 | Resolver cable, length 20 m, 3x 2x AWG 24 (19x 0.127), Intercontec 12-pin female resolver connector, 9-pin male DSUB servo connector, can be used in cable drag chains, UL/CSA listed | |
| 8CR025.12-1 | Resolver cable, length 25 m, 3x 2x AWG 24 (19x 0.127), Intercontec 12-pin female resolver connector, 9-pin male DSUB servo connector, can be used in cable drag chains, UL/CSA listed | |

Table 141: 8CR005.12-1, 8CR007.12-1, 8CR010.12-1, 8CR015.12-1, 8CR020.12-1, 8CR025.12-1 - Order data

## Information:

**This cable assembly may be available in other lengths.**
**For a current overview, see the B&R website (Resolver cables).**

### 6.6.2 Technical data

| Model number | 8CR005.12-1 | 8CR007.12-1 | 8CR010.12-1 | 8CR015.12-1 | 8CR020.12-1 | 8CR025.12-1 |
|---|---|---|---|---|---|---|
| **General information** | | | | | | |
| Cable cross section | 3x 2x 24 19 AWG | | | | | |
| Durability | Oil resistance per VDE 0472 Part 803 as well as standard hydraulic oils [1] | | | | | |
| Certification | UL AWM Style 20671, 90°C, 30 V, E63216 and CSA AWM, 90°C, 30 V, I/II A/B FT1 LL46064 [1] | | | | | |
| Certifications | | | | | | |
| CE | Yes | | | | | |
| UL | cULus E225616<br>Power conversion equipment | | | | | |
| **Cable construction** | | | | | | |
| Signal line | | | | | | |
| Quantity | 6 | | | | | |
| Wire insulation | Special thermoplastic material | | | | | |
| Wire colors | White/Brown, green/yellow, gray/pink | | | | | |
| Variant | Tinned copper stranded wire | | | | | |
| Cross section | 24 AWG / 19 AWG | | | | | |
| Shield | No | | | | | |
| Stranding | White with brown, green with yellow, gray with pink | | | | | |
| Cable stranding | The 3 pairs together covered by foil shield | | | | | |
| Cable shield | Copper braiding, optical coverage ≥ 90% and foil shield | | | | | |
| Outer jacket | | | | | | |
| Material | PUR | | | | | |
| Color | Green, similar to RAL 6018 flat | | | | | |
| Labeling | BERNECKER + RAINER 3x2x24 AWG FLEX UL AWM STYLE 20671<br>90°C 30 V E63216 CSA AWM 90°C 30 V I/II A/B FT1 LL46064 [1] | | | | | |
| **Connector** | | | | | | |
| Type | 12-pin female Intercontec resolver connector | | | | | |
| Mating cycles | <500 | | | | | |
| Contacts | 12 | | | | | |
| Additional connectors | 9-pin male DSUB servo connector<br>Mating cycles: <200<br>Contacts: 9<br>Degree of protection per EN 60529: IP20 when connected | | | | | |
| Degree of protection per EN 60529 | IP66/67 when connected | | | | | |
| **Electrical properties** [1] | | | | | | |
| Operating voltage | ≤30 $V_{eff}$ | | | | | |
| Test voltage | | | | | | |
| Wire/Wire | 1.5 kV | | | | | |
| Wire/Shield | 0.8 kV | | | | | |
| Conductor resistance | | | | | | |
| Signal line | ≤86 Ω/km | | | | | |

Table 142: 8CR005.12-1, 8CR007.12-1, 8CR010.12-1, 8CR015.12-1, 8CR020.12-1, 8CR025.12-1 - Technical data

| Model number | 8CR005.12-1 | 8CR007.12-1 | 8CR010.12-1 | 8CR015.12-1 | 8CR020.12-1 | 8CR025.12-1 |
|---|---|---|---|---|---|---|
| Insulation resistance | >200 MΩ*km | | | | | |
| **Ambient conditions** [1] | | | | | | |
| Temperature | | | | | | |
| Moving | -20°C to 80°C | | | | | |
| Static | -20°C to 90°C | | | | | |
| **Mechanical properties** [1] | | | | | | |
| Dimensions | | | | | | |
| Length | 5 m | 7 m | 10 m | 15 m | 20 m | 25 m |
| Diameter | 6.5 mm ± 0.2 mm | | | | | |
| Bend radius | | | | | | |
| Single bend | ≥20 mm | | | | | |
| Moving | ≥50 mm | | | | | |
| Drag chain data | | | | | | |
| Acceleration | ≤6 g | | | | | |
| Flex cycles [2] | >3,000,000 | | | | | |
| Speed | ≤4 m/s | | | | | |
| Weight | 0.35 kg | 0.49 kg | 0.7 kg | 1.1 kg | 1.4 kg | 1.8 kg |

Table 142: 8CR005.12-1, 8CR007.12-1, 8CR010.12-1, 8CR015.12-1, 8CR020.12-1, 8CR025.12-1 - Technical data

1) Values refer to the raw cable being used.
2) At an ambient temperature of 20°C and bend radius of 65 mm.

## 6.6.3 Wiring

### 6.6.3.1 Construction of the resolver cable

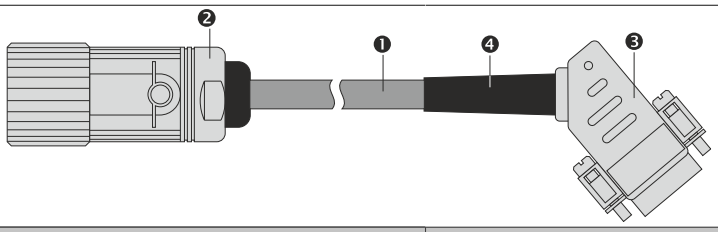


| Pos. | Description | Note |
|---|---|---|
| 1 | Encoder line | 3x 2x 24 AWG/19 |
| 2 | 12-pin female circular connector | Dimensions: ø 26 x 55 mm |
| 3 | DSUB housing 45°, metal-plated, 9-pin male connector | Dimensions: 31 x 15 x 40 mm |
| 4 | Kink protection | |

Table 143: Resolver cables - Construction

### 6.6.3.2 Pinout

| Circular connector | Pin | Description | Function | Pin | DSUB connector |
|---|---|---|---|---|---|
| 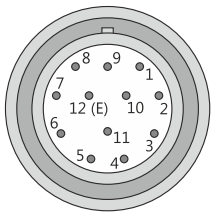 | 1 | --- | | | 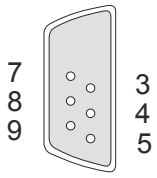 |
| | 2 | --- | | | |
| | 3 | S4 | Sine input + | 3 | |
| | 4 | S1 | Cosine input - | 4 | |
| | 5 | Ref | Reference output + | 5 | |
| | 6 | --- | | | |
| | 7 | Cos\ | Sine input - | 7 | |
| | 8 | Sin\ | Cosine input + | 8 | |
| | 9 | Ref\ | Reference output - | 9 | |
| | 10 | --- | | | |
| | 11 | --- | | | |
| | 12 | --- | | | |





Table 144: Resolver cables - Pinout

### 6.6.3.3 Cable diagram

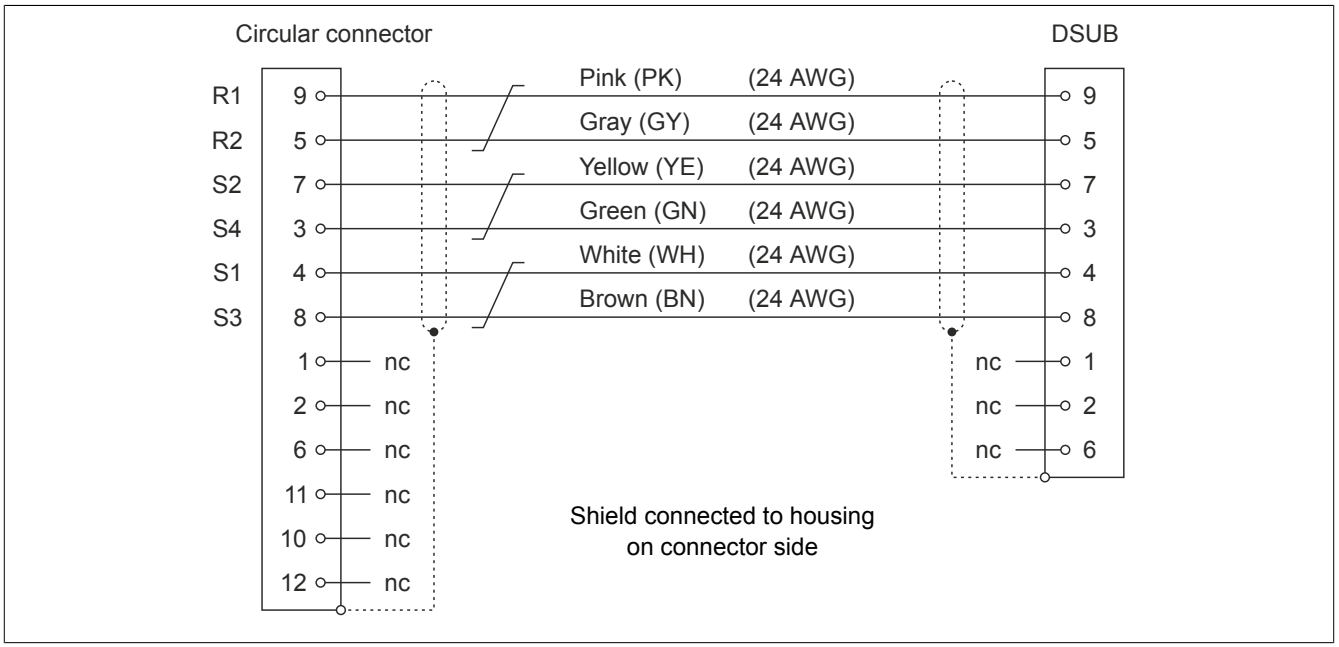


Figure 50: Resolver cables - Cable diagram





Provided by Industrial Automation Co. • www.industrialautomationco.com • Parts & Repair: 877-727-8757

## 6.7 8BCR ESTB resolver cables

### 6.7.1 Order data

| Model number | Short description | Figure |
|---|---|---|
| | **Resolver cables** |  |
| 8BCR0005.1121A-0 | Resolver cable, length 5 m, 3x 2x 24 AWG (19x 0.127), 12-pin female springtec connector, 9-pin male DSUB servo connector, can be used in cable drag chains | |
| 8BCR0007.1121A-0 | Resolver cable, length 7 m, 3x 2x 24 AWG (19x 0.127), 12-pin female springtec connector, 9-pin male DSUB servo connector, can be used in cable drag chains | |
| 8BCR0010.1121A-0 | Resolver cable, length 10 m, 3x 2x 24 AWG (19x 0.127), 12-pin female springtec connector, 9-pin male DSUB servo connector, can be used in cable drag chains | |
| 8BCR0015.1121A-0 | Resolver cable, length 15 m, 3x 2x 24 AWG (19x 0.127), 12-pin female springtec connector, 9-pin male DSUB servo connector, can be used in cable drag chains | |
| 8BCR0020.1121A-0 | Resolver cable, length 20 m, 3x 2x 24 AWG (19x 0.127), 12-pin female springtec connector, 9-pin male DSUB servo connector, can be used in cable drag chains | |
| 8BCR0025.1121A-0 | Resolver cable, length 25 m, 3x 2x 24 AWG (19x 0.127), 12-pin female springtec connector, 9-pin male DSUB servo connector, can be used in cable drag chains | |

Table 145: 8BCR0005.1121A-0, 8BCR0007.1121A-0, 8BCR0010.1121A-0, 8BCR0015.1121A-0, 8BCR0020.1121A-0, 8BCR0025.1121A-0 - Order data

## Information:

**This cable assembly may be available in other lengths.**
**For a current overview, see the B&R website (Resolver cables with springtec connector).**

### 6.7.2 Technical data

| Product ID | 8BCR0005. 1121A-0 | 8BCR0007. 1121A-0 | 8BCR0010. 1121A-0 | 8BCR0015. 1121A-0 | 8BCR0020. 1121A-0 | 8BCR0025. 1121A-0 |
|---|---|---|---|---|---|---|
| **General information** | | | | | | |
| Cable cross section | 3x 2x 24 19 AWG | | | | | |
| Durability | Oil resistance per VDE 0472 Part 803 as well as standard hydraulic oils[1)] | | | | | |
| Certification | UL AWM style 20671, 90°C, 30 V, E63216 and CSA AWM, 90°C, 30 V, I/II A/B FT1 LL46064[1)] | | | | | |
| Certifications | | | | | | |
| CE | Yes | | | | | |
| UL | cULus E225616<br>Power conversion equipment | | | | | |
| **Cable construction** | | | | | | |
| Signal line | | | | | | |
| Quantity | 6 | | | | | |
| Wire insulation | Special thermoplastic material | | | | | |
| Wire colors | White/Brown, green/yellow, gray/pink | | | | | |
| Variant | Tinned copper stranded wire | | | | | |
| Cross section | AWG 24 / AWG 19 | | | | | |
| Shield | No | | | | | |
| Stranding | White with brown, green with yellow, gray with pink | | | | | |
| Cable stranding | The 3 pairs together covered by foil shield | | | | | |
| Cable shield | Copper braiding, optical coverage ≥90% with foil shield | | | | | |
| Outer jacket | | | | | | |
| Material | PUR | | | | | |
| Color | Green, similar to RAL 6018 flat | | | | | |
| Labeling | B&R 3x2x24 AWG FLEX UL AWM STYLE 20671 90°C 30 V E63216 CSA AWM 90°C 30 V I/II A/B FT1 LL46064[1)] | | | | | |
| **Connector** | | | | | | |
| Type | 12-pin female springtec resolver connector | | | | | |
| Mating cycles | <500 | | | | | |
| Contacts | 12 | | | | | |
| Additional connectors | 9-pin male DSUB servo connector<br>Connection cycles: <200<br>Contacts: 9<br>Degree of protection per EN 60529: IP20 when connected | | | | | |
| Degree of protection per EN 60529 | IP66/67 when connected | | | | | |
| **Electrical properties[1)]** | | | | | | |
| Operating voltage | ≤30 $V_{eff}$ | | | | | |
| Test voltage | | | | | | |
| Wire/Wire | 1.5 kV | | | | | |
| Wire/Shield | 0.8 kV | | | | | |

Table 146: 8BCR0005.1121A-0, 8BCR0007.1121A-0, 8BCR0010.1121A-0, 8BCR0015.1121A-0, 8BCR0020.1121A-0, 8BCR0025.1121A-0 - Technical data

| Product ID | 8BCR0005.1121A-0 | 8BCR0007.1121A-0 | 8BCR0010.1121A-0 | 8BCR0015.1121A-0 | 8BCR0020.1121A-0 | 8BCR0025.1121A-0 |
|---|---|---|---|---|---|---|
| Conductor resistance | | | | | | |
| Signal line | ≤86 Ω/km | | | | | |
| Insulation resistance | >200 MΩ*km | | | | | |
| **Ambient conditions**[1] | | | | | | |
| Temperature | | | | | | |
| Moving | -20°C to 80°C | | | | | |
| Static | -20°C to 80°C | | | | | |
| **Mechanical properties**[1] | | | | | | |
| Dimensions | | | | | | |
| Length | 5 m | 7 m | 10 m | 15 m | 20 m | 25 m |
| Diameter | 6.5 mm ± 0.2 mm | | | | | |
| Bend radius | | | | | | |
| Single bend | ≥20 mm | | | | | |
| Moving | ≥50 mm | | | | | |
| Drag chain data | | | | | | |
| Acceleration | ≤6 g | | | | | |
| Flex cycles[2] | >3,000,000 | | | | | |
| Speed | ≤4 m/s | | | | | |
| Weight | 0.35 kg | 0.49 kg | 0.7 kg | 1.05 kg | 1.4 kg | 1.75 kg |

Table 146: 8BCR0005.1121A-0, 8BCR0007.1121A-0, 8BCR0010.1121A-0, 8BCR0015.1121A-0, 8BCR0020.1121A-0, 8BCR0025.1121A-0 - Technical data

1) Specified values refer to the raw cable being used.
2) At an ambient temperature of 20°C and a flex radius of 65 mm.

## 6.7.3 Wiring

### 6.7.3.1 Cable construction

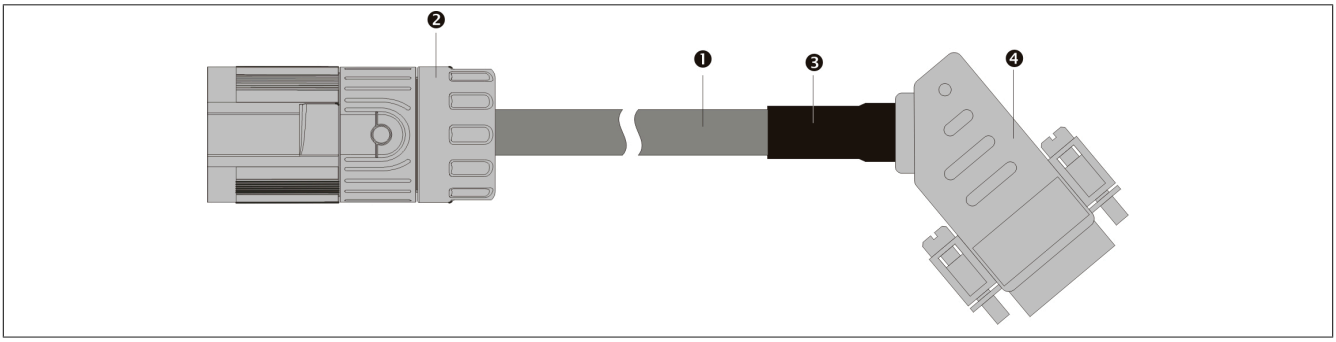


| Pos. | Description | Note |
|---|---|---|
| 1 | Encoder cable | 3x 2x 24 AWG/19 |
| 2 | 12-pin female resolver connector<br>Coding contact | Dimensions: ø 19 x 42 mm |
| 3 | Heat shrink tubing | |
| 4 | DSUB housing 45°, metal-plated, 9-pin connector | Dimensions: 31 x 15 x 40 mm |

Table 147: Resolver cables - Cable construction

### 6.7.3.2 Pinout

| Connector | Pin | Description | Function | Pin | Connector |
|---|---|---|---|---|---|
| 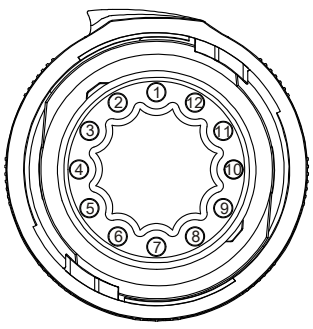 | 1 | --- | Coding contact | --- | 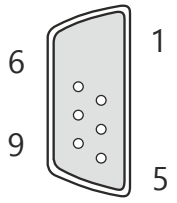 |
| | 2 | --- | --- | --- | |
| | 3 | --- | --- | --- | |
| | 4 | --- | --- | --- | |
| | 5 | --- | --- | --- | |
| | 6 | R1 | Reference output inverted | 9 | |
| | 7 | --- | --- | --- | |
| | 8 | S4 | Sine input + | 3 | |
| | 9 | S2 | Sine input - | 7 | |
| | 10 | S3 | Cosine input + | 8 | |
| | 11 | S1 | Cosine input - | 4 | |
| | 12 | R2 | Reference output | 5 | |



Table 148: Resolver cables - Pinout

### 6.7.3.3 Cable diagram

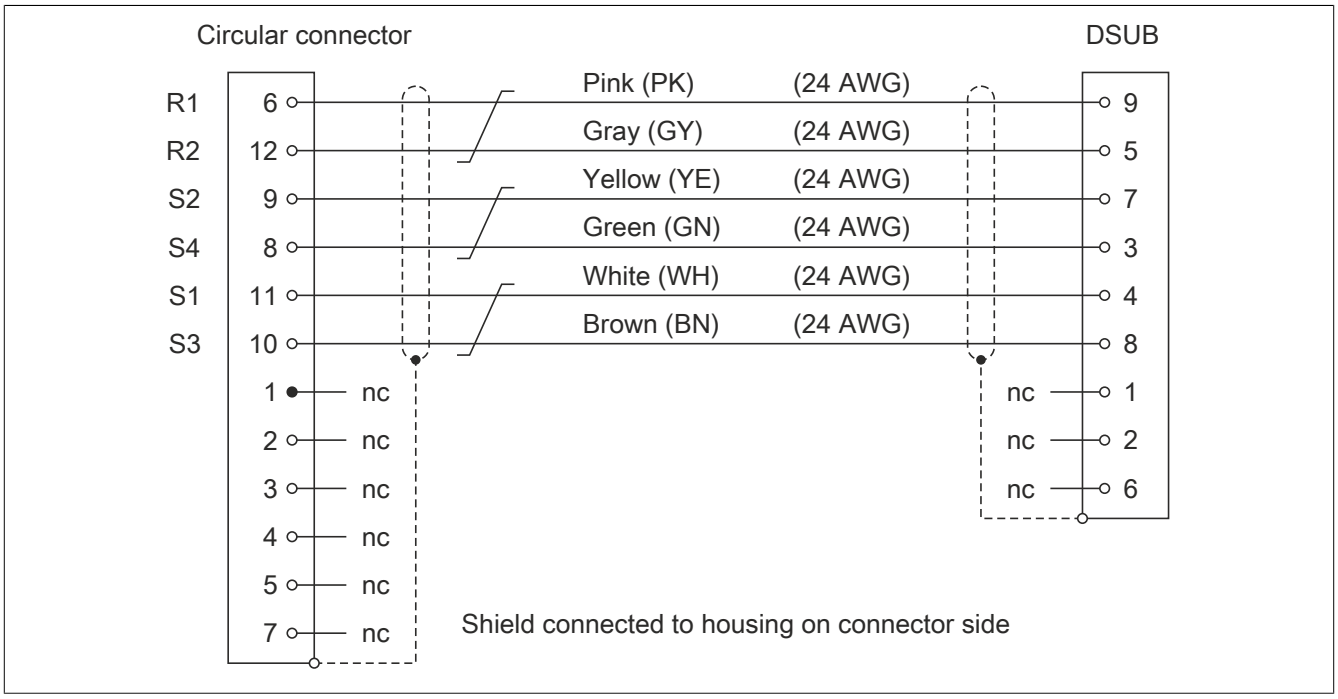


Figure 51: Resolver cables - Cable diagram



Provided by Industrial Automation Co. • www.industrialautomationco.com • Parts & Repair: 877-727-8757

## 6.8 Cable extensions

### Advice:

**The cable lengths listed here are standard lengths. B&R offers even more cable lengths. For an overview of all available cable lengths, see the B&R website.**

### 6.8.1 0.75 mm² motor cable with springtec connector

### Advice:

**The cable lengths listed here are standard lengths. B&R offers even more cable lengths. For an overview of all available cable lengths, see the B&R website.**

#### 6.8.1.1 Order data

| Model number | Short description | Figure |
|---|---|---|
| | **Motor cables 0.75 mm² SpringTec connector** |  |
| 8BCM0005.10360-0 | Cable extension for 0.75 mm² motor cables with springtec connector, length 5 m, can be used in cable drag chains | |
| 8BCM0007.10360-0 | Cable extension for 0.75 mm² motor cables with springtec connector, length 7 m, can be used in cable drag chains | |
| 8BCM0010.10360-0 | Cable extension for 0.75 mm² motor cables with springtec connector, length 10 m, can be used in cable drag chains | |
| 8BCM0015.10360-0 | Cable extension for 0.75 mm² motor cables with springtec connector, length 15 m, can be used in cable drag chains | |
| 8BCM0020.10360-0 | Cable extension for 0.75 mm² motor cables with springtec connector, length 20 m, can be used in cable drag chains | |
| 8BCM0025.10360-0 | Cable extension for 0.75 mm² motor cables with springtec connector, length 25 m, can be used in cable drag chains | |

Table 149: 8BCM0005.10360-0, 8BCM0007.10360-0, 8BCM0010.10360-0, 8BCM0015.10360-0, 8BCM0020.10360-0, 8BCM0025.10360-0 - Order data

### Information:

**This cable assembly may be available in other lengths. For a current overview, see the B&R website (0.75 mm² motor cables with springtec connector).**

#### 6.8.1.2 Technical data

| Model number | 8BCM0005.10360-0 | 8BCM0007.10360-0 | 8BCM0010.10360-0 | 8BCM0015.10360-0 | 8BCM0020.10360-0 | 8BCM0025.10360-0 |
|---|---|---|---|---|---|---|
| **General information** | | | | | | |
| Cable cross section | 4x 0.75 mm² + 2x 2x 0.34 mm² | | | | | |
| Durability | Oil resistance per HD 22.10 appendix A, DIN EN 60811-404 [1] | | | | | |
| Certification | E170315 cRUus AWM STYLE 21223 AWM I/II A/B 80°C 1000 V FT1 [1] | | | | | |
| Certifications | | | | | | |
| CE | Yes | | | | | |
| UL | cULus E225616<br>Power conversion equipment | | | | | |
| **Cable construction** | | | | | | |
| Power lines | | | | | | |
| Quantity | 4 | | | | | |
| Wire insulation | PP | | | | | |
| Wire colors | Black, brown, blue, yellow/green | | | | | |
| Variant | Tinned copper stranded wire | | | | | |
| Cross section | 0.75 mm² | | | | | |
| Shield | No | | | | | |
| Stranding | No | | | | | |
| Signal line | | | | | | |
| Quantity | 4 | | | | | |
| Wire insulation | PP | | | | | |
| Wire colors | White, white/red, white/blue, white/green | | | | | |
| Variant | Tinned copper stranded wire | | | | | |
| Cross section | 0.34 mm² | | | | | |
| Shield | Separate shielding for pairs, tinned copper braiding, optical coverage >85% and foil shield | | | | | |
| Stranding | White with white/red and white/blue with white/green | | | | | |
| Cable stranding | With filler elements and foil shield | | | | | |
| Cable shield | Tinned copper braiding, optical coverage >85% with foil shield | | | | | |

Table 150: 8BCM0005.10360-0, 8BCM0007.10360-0, 8BCM0010.10360-0, 8BCM0015.10360-0, 8BCM0020.10360-0, 8BCM0025.10360-0 - Technical data

| Model number | 8BCM0005.10360-0 | 8BCM0007.10360-0 | 8BCM0010.10360-0 | 8BCM0015.10360-0 | 8BCM0020.10360-0 | 8BCM0025.10360-0 |
|---|---|---|---|---|---|---|
| Outer jacket | | | | | | |
| Material | TPU | | | | | |
| Color | Orange, similar to RAL 2003 flat | | | | | |
| Labeling | B&R 4 G 0.75 + 2 x (2x0.34)C C E170315 cRUus AWM STYLE 21223 AWM I/II A/B 80°C 1000 V FT1 production order number [1] | | | | | |
| **Connector** | | | | | | |
| Type | 9-pin female springtec circular connector | | | | | |
| Mating cycles | <500 | | | | | |
| Contacts | 9 | | | | | |
| Additional connectors | 9-pin male coupling<br>Connection cycles: <500<br>Contacts: 9<br>Degree of protection per EN 60529: IP66/67 when connected | | | | | |
| Degree of protection per EN 60529 | IP66/67 when connected | | | | | |
| **Electrical properties** [1] | | | | | | |
| Operating voltage | Max. 1000 V AC (UL) | | | | | |
| Test voltage | | | | | | |
| Wire/Wire | 4 kV | | | | | |
| Wire/Shield | 4 kV | | | | | |
| Conductor resistance | | | | | | |
| Power lines | ≤26.7 Ω/km | | | | | |
| Signal line | ≤56 Ω/km | | | | | |
| Insulation resistance | ≥500 MΩ*km | | | | | |
| Current-carrying capacity per DIN VDE 0298 part 4, table 11 | | | | | | |
| Wall mounting | 13 A | | | | | |
| Installed in conduit or cable duct | 11.5 A | | | | | |
| Installed in cable tray | 13.5 A | | | | | |
| **Ambient conditions** [1] | | | | | | |
| Temperature | | | | | | |
| Moving | -20°C to 80°C | | | | | |
| Static | -20°C to 90°C | | | | | |
| **Mechanical properties** [1] | | | | | | |
| Dimensions | | | | | | |
| Length | 5 m | 7 m | 10 m | 15 m | 20 m | 25 m |
| Diameter | 10.1 mm ± 0.3 mm | | | | | |
| Bend radius | | | | | | |
| Single bend | >32 mm | | | | | |
| Moving | >78 mm | | | | | |
| Drag chain data | | | | | | |
| Acceleration | Max. 50 m/s² (depends on the length of the travel path) | | | | | |
| Flex cycles [2] | ≥5,000,000 | | | | | |
| Speed | Max. 300 m/min | | | | | |
| Weight | 0.45 kg | 0.62 kg | 0.89 kg | 1.34 kg | 1.78 kg | 2.23 kg |

Table 150: 8BCM0005.10360-0, 8BCM0007.10360-0, 8BCM0010.10360-0, 8BCM0015.10360-0, 8BCM0020.10360-0, 8BCM0025.10360-0 - Technical data

1) Values refer to the raw cable being used.
2) At an ambient temperature from -20°C to 60°C.



Provided by Industrial Automation Co. • www.industrialautomationco.com • Parts & Repair: 877-727-8757

## 6.8.2 1.5 mm² motor cables

### 6.8.2.1 Order data

| Model number | Short description | Figure |
|---|---|---|
| | **Motor cables 1.5 mm²** |  |
| 8BCM0005.11140-0 | Cable extension for 1.5 mm² motor cables with speedtec or standard connector, length 5 m, can be used in cable drag chains | |
| 8BCM0007.11140-0 | Cable extension for 1.5 mm² motor cables with speedtec or standard connector, length 7 m, can be used in cable drag chains | |
| 8BCM0010.11140-0 | Cable extension for 1.5 mm² motor cables with speedtec or standard connector, length 10 m, can be used in cable drag chains | |
| 8BCM0015.11140-0 | Cable extension for 1.5 mm² motor cables with speedtec or standard connector, length 15 m, can be used in cable drag chains | |
| 8BCM0020.11140-0 | Cable extension for 1.5 mm² motor cables with speedtec or standard connector, length 20 m, can be used in cable drag chains | |
| 8BCM0025.11140-0 | Cable extension for 1.5 mm² motor cables with speedtec or standard connector, length 25 m, can be used in cable drag chains | |

Table 151: 8BCM0005.11140-0, 8BCM0007.11140-0, 8BCM0010.11140-0, 8BCM0015.11140-0, 8BCM0020.11140-0, 8BCM0025.11140-0 - Order data

## Information:

**This cable assembly may be available in other lengths.**
**For a current overview, see the B&R website (1.5 mm² motor cables).**

### 6.8.2.2 Technical data

| Model number | 8BCM0005.11140-0 | 8BCM0007.11140-0 | 8BCM0010.11140-0 | 8BCM0015.11140-0 | 8BCM0020.11140-0 | 8BCM0025.11140-0 |
|---|---|---|---|---|---|---|
| **General information** | | | | | | |
| Cable cross section | 4x 1.5 mm² + 2x 2x 0.75 mm² | | | | | |
| Durability | Oil resistance per HD 22.10 appendix A DIN EN 60811-404 [1] | | | | | |
| Certification | E170315 cRUus AWM STYLE 21223 AWM I/II A/B 80°C 1000 V FT1 [1] | | | | | |
| Certifications | | | | | | |
| CE | Yes | | | | | |
| UL | cULus E225616<br>Power conversion equipment | | | | | |
| EAC | Yes | | | | | |
| **Cable construction** | | | | | | |
| Power lines | | | | | | |
| Quantity | 4 | | | | | |
| Wire insulation | PP | | | | | |
| Wire colors | Black, brown, blue, yellow/green | | | | | |
| Variant | Tinned copper stranded wire | | | | | |
| Cross section | 1.5 mm² | | | | | |
| Shield | No | | | | | |
| Stranding | No | | | | | |
| Signal line | | | | | | |
| Quantity | 4 | | | | | |
| Wire insulation | PP | | | | | |
| Wire colors | White, white/red, white/blue, white/green | | | | | |
| Variant | Tinned copper stranded wire | | | | | |
| Cross section | 0.75 mm² | | | | | |
| Shield | Separate shielding for pairs, tinned copper braiding, optical coverage >85% and foil shield | | | | | |
| Stranding | White with white/red and white/blue with white/green | | | | | |
| Cable stranding | With filler elements and foil shield | | | | | |
| Cable shield | Tinned copper braiding, optical coverage >85% and foil shield | | | | | |
| Outer jacket | | | | | | |
| Material | TPU | | | | | |
| Color | Orange, similar to RAL 2003 flat | | | | | |
| Labeling | B&R 4 G 1.5 + 2 x (2x0,75)C C E170315 cRUus AWM STYLE 21223 AWM I/II A/B 80°C 1000 V FT1 production order number [1] | | | | | |
| **Connector** | | | | | | |
| Type | 8-pin female speedtec motor connector | | | | | |
| Mating cycles | <500 | | | | | |
| Contacts | 8 (4 power and 4 signal contacts) | | | | | |
| Additional connectors | 8-pin male coupling<br>Connection cycles: <500<br>Contacts: 8<br>Degree of protection per EN 60529: IP66/67 when connected | | | | | |
| Degree of protection per EN 60529 | IP66/67 when connected | | | | | |

Table 152: 8BCM0005.11140-0, 8BCM0007.11140-0, 8BCM0010.11140-0, 8BCM0015.11140-0, 8BCM0020.11140-0, 8BCM0025.11140-0 - Technical data

| Model number | 8BCM0005. 11140-0 | 8BCM0007. 11140-0 | 8BCM0010. 11140-0 | 8BCM0015. 11140-0 | 8BCM0020. 11140-0 | 8BCM0025. 11140-0 |
|---|---|---|---|---|---|---|
| **Electrical properties** [1] | | | | | | |
| Operating voltage | Max. 1000 V AC (UL) | | | | | |
| Test voltage | | | | | | |
| Wire - Wire | 4 kV | | | | | |
| Wire - Shield | 4 kV | | | | | |
| Conductor resistance | | | | | | |
| Power lines | ≤13.7 Ω/km | | | | | |
| Signal line | ≤26.7 Ω/km | | | | | |
| Insulation resistance | ≥500 MΩ*km | | | | | |
| Current-carrying capacity per DIN VDE 0298 part 4, table 11 | | | | | | |
| Wall mounting | 20 A | | | | | |
| Installed in conduit or cable duct | 17.8 A | | | | | |
| Installed in cable tray | 20.9 A | | | | | |
| **Ambient conditions** [1] | | | | | | |
| Temperature | | | | | | |
| Moving | -20°C to 80°C | | | | | |
| Static | -20°C to 90°C | | | | | |
| **Mechanical properties** [1] | | | | | | |
| Dimensions | | | | | | |
| Length | 5 m | 7 m | 10 m | 15 m | 20 m | 25 m |
| Diameter | 12.2 mm ± 0.3 mm | | | | | |
| Bend radius | | | | | | |
| Single bend | >38 mm | | | | | |
| Moving | >94 mm | | | | | |
| Drag chain data | | | | | | |
| Acceleration | Max. 50 m/s² (depends on the length of the travel path) | | | | | |
| Flex cycles [2] | ≥5,000,000 | | | | | |
| Velocity | Max. 300 m/min | | | | | |
| Weight | 0.7 kg | 1 kg | 1.5 kg | 2.2 kg | 2.9 kg | 3.7 kg |

Table 152: 8BCM0005.11140-0, 8BCM0007.11140-0, 8BCM0010.11140-0, 8BCM0015.11140-0, 8BCM0020.11140-0, 8BCM0025.11140-0 - Technical data

1) Values refer to the raw cable being used.
2) At an ambient temperature from -20°C to 60°C.



Provided by Industrial Automation Co. • www.industrialautomationco.com • Parts & Repair: 877-727-8757

## 6.8.3 4 mm² motor cables

### 6.8.3.1 Order data

| Model number | Short description | Figure |
|---|---|---|
| | **Motor cables 4 mm²** |  |
| 8BCM0005.13140-0 | Cable extension for 4 mm² motor cables with speedtec or standard connector, length 5 m, can be used in cable drag chains | |
| 8BCM0007.13140-0 | Cable extension for 4 mm² motor cables with speedtec or standard connector, length 7 m, can be used in cable drag chains | |
| 8BCM0010.13140-0 | Cable extension for 4 mm² motor cables with speedtec or standard connector, length 10 m, can be used in cable drag chains | |
| 8BCM0015.13140-0 | Cable extension for 4 mm² motor cables with speedtec or standard connector, length 15 m, can be used in cable drag chains | |
| 8BCM0020.13140-0 | Cable extension for 4 mm² motor cables with speedtec or standard connector, length 20 m, can be used in cable drag chains | |
| 8BCM0025.13140-0 | Cable extension for 4 mm² motor cables with speedtec or standard connector, length 25 m, can be used in cable drag chains | |

Table 153: 8BCM0005.13140-0, 8BCM0007.13140-0, 8BCM0010.13140-0, 8BCM0015.13140-0, 8BCM0020.13140-0, 8BCM0025.13140-0 - Order data

## Information:

**This cable assembly may be available in other lengths.**
**For a current overview, see the B&R website (4 mm² motor cables).**

### 6.8.3.2 Technical data

| Model number | 8BCM0005.13140-0 | 8BCM0007.13140-0 | 8BCM0010.13140-0 | 8BCM0015.13140-0 | 8BCM0020.13140-0 | 8BCM0025.13140-0 |
|---|---|---|---|---|---|---|
| **General information** | | | | | | |
| Cable cross section | 4x 4 mm² + 2x 0.75 mm² + 2x 1 mm² | | | | | |
| Durability | Oil resistance per HD 22.10 appendix A and DIN EN 60811-404 [1] | | | | | |
| Certification | E170315 cRUus AWM STYLE 21223 AWM I/II A/B 80°C 1000 V FT1 [1] | | | | | |
| Certifications | | | | | | |
| CE | Yes | | | | | |
| UL | cULus E225616<br>Power conversion equipment | | | | | |
| EAC | Yes | | | | | |
| **Cable construction** | | | | | | |
| Power lines | | | | | | |
| Quantity | 4 | | | | | |
| Wire insulation | PP | | | | | |
| Wire colors | Black, brown, blue, yellow/green | | | | | |
| Variant | Tinned copper stranded wire | | | | | |
| Cross section | 4 mm² | | | | | |
| Shield | No | | | | | |
| Stranding | No | | | | | |
| Signal line | | | | | | |
| Quantity | 4 | | | | | |
| Wire insulation | PP | | | | | |
| Wire colors | White, white/red, white/blue, white/green | | | | | |
| Variant | Tinned copper stranded wire | | | | | |
| Cross section | 2x 0.75 mm² + 2x 1 mm² | | | | | |
| Shield | Separate shielding for pairs, tinned copper braiding, optical coverage >85% and foil shield | | | | | |
| Stranding | White with white/red and white/blue with white/green | | | | | |
| Cable stranding | With filler elements and foil shield | | | | | |
| Cable shield | Tinned copper braiding, optical coverage >85% and foil shield | | | | | |
| Outer jacket | | | | | | |
| Material | TPU | | | | | |
| Color | Orange, similar to RAL 2003 flat | | | | | |
| Labeling | B&R 4 G 4 + (2x0.75)C + (2x1)C C E170315 cRUus AWM STYLE 21223 AWM I/II A/B 80°C 1000 V FT1 [1] | | | | | |
| **Connector** | | | | | | |
| Type | 8-pin female speedtec motor connector | | | | | |
| Mating cycles | <500 | | | | | |
| Contacts | 8 (4 power and 4 signal contacts) | | | | | |
| Additional connectors | 8-pin male coupling<br>Connection cycles: <500<br>Contacts: 8<br>Degree of protection per EN 60529: IP66/67 when connected | | | | | |
| Degree of protection per EN 60529 | IP66/67 when connected | | | | | |

Table 154: 8BCM0005.13140-0, 8BCM0007.13140-0, 8BCM0010.13140-0, 8BCM0015.13140-0, 8BCM0020.13140-0, 8BCM0025.13140-0 - Technical data

| Model number | 8BCM0005. 13140-0 | 8BCM0007. 13140-0 | 8BCM0010. 13140-0 | 8BCM0015. 13140-0 | 8BCM0020. 13140-0 | 8BCM0025. 13140-0 |
|---|---|---|---|---|---|---|
| **Electrical properties** [1] | | | | | | |
| Operating voltage | Max. 1000 V AC (UL) | | | | | |
| Test voltage | | | | | | |
| Wire - Wire | 4 kV | | | | | |
| Wire - Shield | 4 kV | | | | | |
| Conductor resistance | | | | | | |
| Power lines | ≤5.1 Ω/km | | | | | |
| Signal line | 0.75 mm²: ≤26.7 Ω/km, 1 mm²: ≤20 Ω/km | | | | | |
| Insulation resistance | ≥500 MΩ*km | | | | | |
| Current-carrying capacity per DIN VDE 0298 part 4, table 11 | | | | | | |
| Wall mounting | 30 A [2] | | | | | |
| Installed in conduit or cable duct | 30 A [2] | | | | | |
| Installed in cable tray | 30 A [2] | | | | | |
| **Ambient conditions** [1] | | | | | | |
| Temperature | | | | | | |
| Moving | -20°C to 80°C | | | | | |
| Static | -20°C to 90°C | | | | | |
| **Mechanical properties** [1] | | | | | | |
| Dimensions | | | | | | |
| Length | 5 m | 7 m | 10 m | 15 m | 20 m | 25 m |
| Diameter | 15.4 mm ± 0.4 mm | | | | | |
| Bend radius | | | | | | |
| Single bend | >48 mm | | | | | |
| Moving | >119 mm | | | | | |
| Drag chain data | | | | | | |
| Acceleration | Max. 50 m/s² (depends on the length of the travel path) | | | | | |
| Flex cycles [3] | ≥5,000,000 | | | | | |
| Velocity | Max. 300 m/min | | | | | |
| Weight | 1.4 kg | 1.9 kg | 2.8 kg | 4.2 kg | 5.5 kg | 6.9 kg |

Table 154: 8BCM0005.13140-0, 8BCM0007.13140-0, 8BCM0010.13140-0, 8BCM0015.13140-0, 8BCM0020.13140-0, 8BCM0025.13140-0 - Technical data

1) Values refer to the raw cable being used.
2) Limited to 30 A by the motor connector.
3) At an ambient temperature from -20°C to 60°C.



Provided by Industrial Automation Co. • www.industrialautomationco.com • Parts & Repair: 877-727-8757

## 6.8.4 4 mm² motor cables with size 1.5 motor connector

### 6.8.4.1 Order data

| Model number | Short description | Figure |
|---|---|---|
| | **Motor cables 4 mm²** |  |
| 8BCM0005.13250-0 | Cable extension for 4 mm² motor cables with speedtec or standard connector, size 1.5, length 5 m, can be used in cable drag chains | |
| 8BCM0007.13250-0 | Cable extension for 4 mm² motor cables with speedtec or standard connector, size 1.5, length 7 m, can be used in cable drag chains | |
| 8BCM0010.13250-0 | Cable extension for 4 mm² motor cables with speedtec or standard connector, size 1.5, length 10 m, can be used in cable drag chains | |
| 8BCM0015.13250-0 | Cable extension for 4 mm² motor cables with speedtec or standard connector, size 1.5, length 15 m, can be used in cable drag chains | |
| 8BCM0020.13250-0 | Cable extension for 4 mm² motor cables with speedtec or standard connector, size 1.5, length 20 m, can be used in cable drag chains | |
| 8BCM0025.13250-0 | Cable extension for 4 mm² motor cables with speedtec or standard connector, size 1.5, length 25 m, can be used in cable drag chains | |

Table 155: 8BCM0005.13250-0, 8BCM0007.13250-0, 8BCM0010.13250-0, 8BCM0015.13250-0, 8BCM0020.13250-0, 8BCM0025.13250-0 - Order data

## Information:

**This cable assembly may be available in other lengths.**
**For a current overview, see the B&R website (4 mm² motor cables).**

### 6.8.4.2 Technical data

| Product ID | 8BCM0005.13250-0 | 8BCM0007.13250-0 | 8BCM0010.13250-0 | 8BCM0015.13250-0 | 8BCM0020.13250-0 | 8BCM0025.13250-0 |
|---|---|---|---|---|---|---|
| **General information** | | | | | | |
| Cable cross section | 4 x 4.0 mm² + 2 x 0.75 mm² + 2 x 1.0 mm² | | | | | |
| Durability | Oil resistance per HD 22.10 appendix A and DIN EN 60811-404[1)] | | | | | |
| Certification | E170315 cRUus AWM STYLE 21223 AWM I/II A/B 80°C 1000 V FT1[1)] | | | | | |
| Certifications | | | | | | |
| CE | Yes | | | | | |
| UL | cULus E225616<br>Power conversion equipment | | | | | |
| **Cable construction** | | | | | | |
| Power lines | | | | | | |
| Quantity | 4 | | | | | |
| Wire insulation | PP | | | | | |
| Wire colors | Black, brown, blue, yellow/green | | | | | |
| Variant | Tinned copper stranded wire | | | | | |
| Cross section | 4 mm² | | | | | |
| Shield | No | | | | | |
| Stranding | No | | | | | |
| Signal line | | | | | | |
| Quantity | 4 | | | | | |
| Wire insulation | PP | | | | | |
| Wire colors | White, white/red, white/blue, white/green | | | | | |
| Variant | Tinned copper stranded wire | | | | | |
| Cross section | 2 x 0.75 mm² + 2 x 1.0 mm² | | | | | |
| Shield | Separate shielding for pairs, tinned copper braiding, optical coverage >85% and foil shield | | | | | |
| Stranding | White with white/red and white/blue with white/green | | | | | |
| Cable stranding | With filler elements and foil shield | | | | | |
| Cable shield | Tinned copper braiding, optical coverage >85% and foil shield | | | | | |
| Outer jacket | | | | | | |
| Material | TPU | | | | | |
| Color | Orange, similar to RAL 2003 flat | | | | | |
| Labeling | B&R 4 G 4 + (2x0.75)C + (2x1)C C E170315 cRUus AWM STYLE 21223 AWM I/II A/B 80°C 1000 V FT1[1)] | | | | | |
| **Connector** | | | | | | |
| Type | 8-pin female speedtec motor connector, size 1.5 | | | | | |
| Mating cycles | <500 | | | | | |
| Contacts | 8 (4 power and 4 signal contacts) | | | | | |

Table 156: 8BCM0005.13250-0, 8BCM0007.13250-0, 8BCM0010.13250-0, 8BCM0015.13250-0, 8BCM0020.13250-0, 8BCM0025.13250-0 - Technical data

| Product ID | 8BCM0005.13250-0 | 8BCM0007.13250-0 | 8BCM0010.13250-0 | 8BCM0015.13250-0 | 8BCM0020.13250-0 | 8BCM0025.13250-0 |
|---|---|---|---|---|---|---|
| Additional connectors | 8-pin male coupling<br>Connection cycles: <500<br>Contacts: 8<br>Degree of protection per EN 60529: IP66/67 when connected | | | | | |
| Degree of protection per EN 60529 | IP66/67 when connected | | | | | |
| **Electrical properties[1)]** | | | | | | |
| Operating voltage | Max. 1000 V AC (UL) | | | | | |
| Test voltage | | | | | | |
| Wire/Wire | 4 kV | | | | | |
| Wire/Shield | 4 kV | | | | | |
| Conductor resistance | | | | | | |
| Power lines | ≤5.1 Ω/km | | | | | |
| Signal line | 0.75 mm²: ≤26.7 Ω/km, 1 mm²: ≤20 Ω/km | | | | | |
| Insulation resistance | ≥500 MΩ*km | | | | | |
| Current-carrying capacity per DIN VDE 0298 part 4, table 11 | | | | | | |
| Wall mounting | 30 A[2)] | | | | | |
| Installed in conduit or cable duct | 30 A[2)] | | | | | |
| Installed in cable tray | 30 A[2)] | | | | | |
| **Ambient conditions[1)]** | | | | | | |
| Temperature | | | | | | |
| Moving | -20°C to 80°C | | | | | |
| Static | -20°C to 90°C | | | | | |
| **Mechanical properties[1)]** | | | | | | |
| Dimensions | | | | | | |
| Length | 5 m | 7 m | 10 m | 15 m | 20 m | 25 m |
| Diameter | 15.4 mm ± 0.4 mm | | | | | |
| Bend radius | | | | | | |
| Single bend | >48 mm | | | | | |
| Moving | >119 mm | | | | | |
| Drag chain data | | | | | | |
| Acceleration | Max. 50 m/s² (depends on the length of the travel path) | | | | | |
| Flex cycles[3)] | ≥5,000,000 | | | | | |
| Speed | Max. 300 m/min | | | | | |
| Weight | 1.4 kg | 1.9 kg | 2.8 kg | 4.2 kg | 5.5 kg | 6.9 kg |

Table 156: 8BCM0005.13250-0, 8BCM0007.13250-0, 8BCM0010.13250-0, 8BCM0015.13250-0, 8BCM0020.13250-0, 8BCM0025.13250-0 - Technical data

1) Values refer to the raw cable being used.
2) Limited to 30 A by the motor connector.
3) At an ambient temperature from -20°C to 60°C.



Provided by Industrial Automation Co. • www.industrialautomationco.com • Parts & Repair: 877-727-8757

## 6.8.5 10 mm² motor cables

### 6.8.5.1 Order data

| Model number | Short description | Figure |
|---|---|---|
| | **Motor cables 10 mm²** |  |
| 8BCM0005.15250-0 | Cable extension for 10 mm² motor cables with speedtec or standard connector, size 1.5, length 5 m, can be used in cable drag chains | |
| 8BCM0007.15250-0 | Cable extension for 10 mm² motor cables with speedtec or standard connector, size 1.5, length 7 m, can be used in cable drag chains | |
| 8BCM0010.15250-0 | Cable extension for 10 mm² motor cables with speedtec or standard connector, size 1.5, length 10 m, can be used in cable drag chains | |
| 8BCM0015.15250-0 | Cable extension for 10 mm² motor cables with speedtec or standard connector, size 1.5, length 15 m, can be used in cable drag chains | |
| 8BCM0020.15250-0 | Cable extension for 10 mm² motor cables with speedtec or standard connector, size 1.5, length 20 m, can be used in cable drag chains | |
| 8BCM0025.15250-0 | Cable extension for 10 mm² motor cables with speedtec or standard connector, size 1.5, length 25 m, can be used in cable drag chains | |

Table 157: 8BCM0005.15250-0, 8BCM0007.15250-0, 8BCM0010.15250-0, 8BCM0015.15250-0, 8BCM0020.15250-0, 8BCM0025.15250-0 - Order data

## Information:

**This cable assembly may be available in other lengths.**
**For a current overview, see the B&R website (10 mm² motor cables).**

### 6.8.5.2 Technical data

| Model number | 8BCM0005.15250-0 | 8BCM0007.15250-0 | 8BCM0010.15250-0 | 8BCM0015.15250-0 | 8BCM0020.15250-0 | 8BCM0025.15250-0 |
|---|---|---|---|---|---|---|
| **General information** | | | | | | |
| Cable cross section | 4x 10 mm² + (2x 0.75 mm²)C + (2x 1.5 mm²)C | | | | | |
| Durability | Oil resistance per HD 22.10 appendix A DIN EN 60811-404 [1] | | | | | |
| Certification | E170315 cRUus AWM STYLE 21223 AWM I/II A/B 80°C 1000 V FT1 [1] | | | | | |
| Certifications | | | | | | |
| CE | Yes | | | | | |
| UL | cULus E225616<br>Power conversion equipment | | | | | |
| **Cable construction** | | | | | | |
| Power lines | | | | | | |
| Quantity | 4 | | | | | |
| Wire insulation | PP | | | | | |
| Wire colors | Black, brown, blue, yellow/green | | | | | |
| Variant | Tinned copper stranded wire | | | | | |
| Cross section | 10 mm² | | | | | |
| Shield | No | | | | | |
| Stranding | No | | | | | |
| Signal line | | | | | | |
| Quantity | 4 | | | | | |
| Wire insulation | PP | | | | | |
| Wire colors | White, white/red, white/blue, white/green | | | | | |
| Variant | Tinned copper stranded wire | | | | | |
| Cross section | 2x 0.75 mm² + 2x 1.5 mm² | | | | | |
| Shield | Separate shielding for pairs, tinned copper braiding, optical coverage >85% and foil shield | | | | | |
| Stranding | White with white/red and white/blue with white/green | | | | | |
| Cable stranding | With filler elements and foil shield | | | | | |
| Cable shield | Tinned copper braiding, optical coverage >85% and foil shield | | | | | |
| Outer jacket | | | | | | |
| Material | TPU | | | | | |
| Color | Orange, similar to RAL 2003 flat | | | | | |
| Labeling | B&R 4 G 10 + (2x0.75)C + (2x1.5)C C E170315 cRUus AWM STYLE 21223 AWM I/II A/B 80°C 1000 V FT1 [1] | | | | | |
| **Connector** | | | | | | |
| Type | 8-pin female speedtec motor connector, size 1.5 | | | | | |
| Mating cycles | <500 | | | | | |
| Contacts | 8 (4 power and 4 signal contacts) | | | | | |

Table 158: 8BCM0005.15250-0, 8BCM0007.15250-0, 8BCM0010.15250-0, 8BCM0015.15250-0, 8BCM0020.15250-0, 8BCM0025.15250-0 - Technical data

| Model number | 8BCM0005.15250-0 | 8BCM0007.15250-0 | 8BCM0010.15250-0 | 8BCM0015.15250-0 | 8BCM0020.15250-0 | 8BCM0025.15250-0 |
|---|---|---|---|---|---|---|
| Additional connectors | 8-pin male coupling<br>Connection cycles: <500<br>Contacts: 8<br>Degree of protection per EN 60529: IP66/67 when connected | | | | | |
| Degree of protection per EN 60529 | IP66/67 when connected | | | | | |
| **Electrical properties** [1] | | | | | | |
| Operating voltage | Max. 1000 V AC (UL) | | | | | |
| Test voltage | | | | | | |
| Wire/Wire | 4 kV | | | | | |
| Wire/Shield | 4 kV | | | | | |
| Conductor resistance | | | | | | |
| Power lines | ≤2 Ω/km | | | | | |
| Signal line | 0.75 mm²: ≤26.7 Ω/km, 1.5 mm²: ≤13.7 Ω/km | | | | | |
| Insulation resistance | ≥500 MΩ*km | | | | | |
| Current-carrying capacity per DIN VDE 0298 part 4, table 11 | | | | | | |
| Wall mounting | 64.6 A | | | | | |
| Installed in conduit or cable duct | 54.6 A | | | | | |
| Installed in cable tray | 68.3 A | | | | | |
| **Ambient conditions** [1] | | | | | | |
| Temperature | | | | | | |
| Moving | -20°C to 80°C | | | | | |
| Static | -20°C to 90°C | | | | | |
| **Mechanical properties** [1] | | | | | | |
| Dimensions | | | | | | |
| Length | 5 m | 7 m | 10 m | 15 m | 20 m | 25 m |
| Diameter | 20.1 mm ± 0.4 mm | | | | | |
| Bend radius | | | | | | |
| Single bend | >62 mm | | | | | |
| Moving | >154 mm | | | | | |
| Drag chain data | | | | | | |
| Acceleration | Max. 50 m/s² (depends on the length of the travel path) | | | | | |
| Flex cycles [2] | ≥5,000,000 | | | | | |
| Speed | Max. 300 m/min | | | | | |
| Weight | 2.7 kg | 3.8 kg | 5.4 kg | 8.1 kg | 10.8 kg | 13.5 kg |

Table 158: 8BCM0005.15250-0, 8BCM0007.15250-0, 8BCM0010.15250-0, 8BCM0015.15250-0, 8BCM0020.15250-0, 8BCM0025.15250-0 - Technical data

1) Values refer to the raw cable being used.
2) At an ambient temperature from -20°C to 60°C.



Provided by Industrial Automation Co. • www.industrialautomationco.com • Parts & Repair: 877-727-8757

## 6.8.6 Resolver cables

### 6.8.6.1 Order data

| Model number | Short description | Figure |
|---|---|---|
| | **Resolver cables** |  |
| 8BCR0005.11120-0 | Cable extension for resolver cable with speedtec or standard connector, length 5 m, can be used in cable drag chains | |
| 8BCR0007.11120-0 | Cable extension for resolver cable with speedtec or standard connector, length 7 m, can be used in cable drag chains | |
| 8BCR0010.11120-0 | Cable extension for resolver cable with speedtec or standard connector, length 10 m, can be used in cable drag chains | |
| 8BCR0015.11120-0 | Cable extension for resolver cable with speedtec or standard connector, length 15 m, can be used in cable drag chains | |
| 8BCR0020.11120-0 | Cable extension for resolver cable with speedtec or standard connector, length 20 m, can be used in cable drag chains | |
| 8BCR0025.11120-0 | Cable extension for resolver cable with speedtec or standard connector, length 25 m, can be used in cable drag chains | |

Table 159: 8BCR0005.11120-0, 8BCR0007.11120-0, 8BCR0010.11120-0, 8BCR0015.11120-0, 8BCR0020.11120-0, 8BCR0025.11120-0 - Order data

## Information:

**This cable assembly may be available in other lengths.**
**For a current overview, see the B&R website (Resolver cables).**

### 6.8.6.2 Technical data

| Model number | 8BCR0005. 11120-0 | 8BCR0007. 11120-0 | 8BCR0010. 11120-0 | 8BCR0015. 11120-0 | 8BCR0020. 11120-0 | 8BCR0025. 11120-0 |
|---|---|---|---|---|---|---|
| **General information** | | | | | | |
| Cable cross section | 3x 2x 24 19 AWG | | | | | |
| Durability | Oil resistance per VDE 0472 Part 803 as well as standard hydraulic oils [1] | | | | | |
| Certification | UL AWM style 20671, 90°C, 30 V, E63216 and CSA AWM, 90°C, 30 V, I/II A/B FT1 LL46064 [1] | | | | | |
| Certifications | | | | | | |
| CE | Yes | | | | | |
| UL | cULus E225616<br>Power conversion equipment | | | | | |
| **Cable construction** | | | | | | |
| Signal line | | | | | | |
| Quantity | 6 | | | | | |
| Wire insulation | Special thermoplastic material | | | | | |
| Wire colors | White/Brown, green/yellow, gray/pink | | | | | |
| Variant | Tinned copper stranded wire | | | | | |
| Cross section | AWG 24 / AWG 19 | | | | | |
| Shield | No | | | | | |
| Stranding | White with brown, green with yellow, gray with pink | | | | | |
| Cable stranding | The 3 pairs together covered by foil shield | | | | | |
| Cable shield | Copper braiding, optical coverage ≥90% with foil shield | | | | | |
| Outer jacket | | | | | | |
| Material | PUR | | | | | |
| Color | Green, similar to RAL 6018 flat | | | | | |
| Labeling | BERNECKER + RAINER 3x2x24 AWG FLEX UL AWM STYLE 20671<br>90°C 30 V E63216 CSA AWM 90°C 30 V I/II A/B FT1 LL46064 [1] | | | | | |
| **Connector** | | | | | | |
| Type | 12-pin female speedtec circular connector | | | | | |
| Mating cycles | <500 | | | | | |
| Contacts | 12 | | | | | |
| Additional connectors | 12-pin male coupling<br>Connection cycles: <500<br>Contacts: 12<br>Degree of protection per EN 60529: IP66/67 when connected | | | | | |
| Degree of protection per EN 60529 | IP66/67 when connected | | | | | |
| **Electrical properties [1]** | | | | | | |
| Operating voltage | ≤30 $V_{eff}$ | | | | | |
| Test voltage | | | | | | |
| Wire - Wire | 1.5 kV | | | | | |
| Wire - Shield | 0.8 kV | | | | | |
| Conductor resistance | | | | | | |
| Signal line | ≤86 Ω/km | | | | | |
| Insulation resistance | >200 MΩ*km | | | | | |

Table 160: 8BCR0005.11120-0, 8BCR0007.11120-0, 8BCR0010.11120-0, 8BCR0015.11120-0, 8BCR0020.11120-0, 8BCR0025.11120-0 - Technical data

| Model number | 8BCR0005. 11120-0 | 8BCR0007. 11120-0 | 8BCR0010. 11120-0 | 8BCR0015. 11120-0 | 8BCR0020. 11120-0 | 8BCR0025. 11120-0 |
|---|---|---|---|---|---|---|
| **Ambient conditions** [1] | | | | | | |
| Temperature | | | | | | |
| Moving | -20°C to 80°C | | | | | |
| Static | -20°C to 90°C | | | | | |
| **Mechanical properties** [1] | | | | | | |
| Dimensions | | | | | | |
| Length | 5 m | 7 m | 10 m | 15 m | 20 m | 25 m |
| Diameter | 6.5 mm ± 0.2 mm | | | | | |
| Bend radius | | | | | | |
| Single bend | ≥20 mm | | | | | |
| Moving | ≥50 mm | | | | | |
| Drag chain data | | | | | | |
| Acceleration | ≤6 g | | | | | |
| Flex cycles [2] | >3,000,000 | | | | | |
| Velocity | ≤4 m/s | | | | | |
| Weight | 0.4 kg | 0.5 kg | 0.7 kg | 1.1 kg | 1.4 kg | 1.8 kg |

Table 160: 8BCR0005.11120-0, 8BCR0007.11120-0, 8BCR0010.11120-0, 8BCR0015.11120-0, 8BCR0020.11120-0, 8BCR0025.11120-0 - Technical data

1) Specified values refer to the raw cable being used.
2) At an ambient temperature of 20°C and bend radius of 65 mm.



Provided by Industrial Automation Co. • www.industrialautomationco.com • Parts & Repair: 877-727-8757

### 6.8.7 Resolver cables with springtec connector

#### 6.8.7.1 Order data

| Model number | Short description | Figure |
|---|---|---|
| | **Resolver Cables SpringTec connector** |  |
| 8BCR0005.11230-0 | Cable extension for resolver cables with springtec connector, length 5 m, can be used in cable drag chains | |
| 8BCR0007.11230-0 | Cable extension for resolver cables with springtec connector, length 7 m, can be used in cable drag chains | |
| 8BCR0010.11230-0 | Cable extension for resolver cables with springtec connector, length 10 m, can be used in cable drag chains | |
| 8BCR0015.11230-0 | Cable extension for resolver cables with springtec connector, length 15 m, can be used in cable drag chains | |
| 8BCR0020.11230-0 | Cable extension for resolver cables with springtec connector, length 20 m, can be used in cable drag chains | |
| 8BCR0025.11230-0 | Cable extension for resolver cables with springtec connector, length 25 m, can be used in cable drag chains | |

Table 161: 8BCR0005.11230-0, 8BCR0007.11230-0, 8BCR0010.11230-0, 8BCR0015.11230-0, 8BCR0020.11230-0, 8BCR0025.11230-0 - Order data

## Information:

**This cable assembly may be available in other lengths.**
**For a current overview, see the B&R website (Resolver cables with springtec connector).**

#### 6.8.7.2 Technical data

| Model number | 8BCR0005. 11230-0 | 8BCR0007. 11230-0 | 8BCR0010. 11230-0 | 8BCR0015. 11230-0 | 8BCR0020. 11230-0 | 8BCR0025. 11230-0 |
|---|---|---|---|---|---|---|
| **General information** | | | | | | |
| Cable cross section | 3x 2x 24 19 AWG | | | | | |
| Durability | Oil resistance per VDE 0472 Part 803 as well as standard hydraulic oils [1] | | | | | |
| Certification | UL AWM style 20671, 90°C, 30 V, E63216 and CSA AWM, 90°C, 30 V, I/II A/B FT1 LL46064 [1] | | | | | |
| Certifications | | | | | | |
| CE | Yes | | | | | |
| UL | cULus E225616<br>Power conversion equipment | | | | | |
| **Cable construction** | | | | | | |
| Signal line | | | | | | |
| Quantity | 6 | | | | | |
| Wire insulation | Special thermoplastic material | | | | | |
| Wire colors | White/Brown, green/yellow, gray/pink | | | | | |
| Variant | Tinned copper stranded wire | | | | | |
| Cross section | 24 AWG / 19 AWG | | | | | |
| Shield | No | | | | | |
| Stranding | White with brown, green with yellow, gray with pink | | | | | |
| Cable stranding | The 3 pairs together covered by foil shield | | | | | |
| Cable shield | Copper braiding, optical coverage >90% with foil shield | | | | | |
| Outer jacket | | | | | | |
| Material | PUR | | | | | |
| Color | Green, similar to RAL 6018 flat | | | | | |
| Labeling | B&R 3x2x24 AWG FLEX UL AWM STYLE 20671 90°C 30 V E63216 CSA AWM 90°C 30 V I/II A/B FT1 LL46064 [1] | | | | | |
| **Connector** | | | | | | |
| Type | 12-pin female springtec circular connector | | | | | |
| Mating cycles | <500 | | | | | |
| Contacts | 12 | | | | | |
| Additional connectors | 12-pin male coupling<br>Connection cycles: <500<br>Contacts: 12<br>Degree of protection per EN 60529: IP66/67 when connected | | | | | |
| Degree of protection per EN 60529 | IP66/67 when connected | | | | | |
| **Electrical properties** [1] | | | | | | |
| Operating voltage | ≤30 $V_{eff}$ | | | | | |
| Test voltage | | | | | | |
| Wire/Wire | 1.5 kV | | | | | |
| Wire/Shield | 0.8 kV | | | | | |
| Conductor resistance | | | | | | |
| Signal line | ≤86 Ω/km | | | | | |
| Insulation resistance | >200 MΩ*km | | | | | |

Table 162: 8BCR0005.11230-0, 8BCR0007.11230-0, 8BCR0010.11230-0, 8BCR0015.11230-0, 8BCR0020.11230-0, 8BCR0025.11230-0 - Technical data

| Model number | 8BCR0005. 11230-0 | 8BCR0007. 11230-0 | 8BCR0010. 11230-0 | 8BCR0015. 11230-0 | 8BCR0020. 11230-0 | 8BCR0025. 11230-0 |
|---|---|---|---|---|---|---|
| **Ambient conditions** [1] | | | | | | |
| Temperature | | | | | | |
| Moving | -20°C to 80°C | | | | | |
| Static | -20°C to 90°C | | | | | |
| **Mechanical properties** [1] | | | | | | |
| Dimensions | | | | | | |
| Length | 5 m | 7 m | 10 m | 15 m | 20 m | 25 m |
| Diameter | 6.5 mm ± 0.2 mm | | | | | |
| Bend radius | | | | | | |
| Single bend | ≥20 mm | | | | | |
| Moving | ≥50 mm | | | | | |
| Drag chain data | | | | | | |
| Acceleration | ≤6 g | | | | | |
| Flex cycles [2] | >3,000,000 | | | | | |
| Speed | ≤4 m/s | | | | | |
| Weight | 0.4 kg | 0.49 kg | 0.7 kg | 1.1 kg | 1.4 kg | 1.8 kg |

Table 162: 8BCR0005.11230-0, 8BCR0007.11230-0, 8BCR0010.11230-0, 8BCR0015.11230-0, 8BCR0020.11230-0, 8BCR0025.11230-0 - Technical data

1) Values refer to the raw cable being used.
2) At an ambient temperature of 20°C and bend radius of 65 mm.



Provided by Industrial Automation Co. • www.industrialautomationco.com • Parts & Repair: 877-727-8757

# 7 Connectors

## 7.1 General information

B&R offers different motor/encoder connectors for B&R motors. All connectors have IP67 protection. The metallic housing provides a protective ground connection on the housing according to VDE 0627. All plastic used in the connector is UL94/V0 listed. High quality, gold-plated cage connector contacts guarantee a high level of contact stability even when reinserted many times.

### Advice:

**It is mandatory to use a special tool for installing the connectors (see installation instructions of the respective connector).**

## 7.2 Motor connectors

### 7.2.1 Order data

| Model number | Short description | Figure |
|---|---|---|
| | **Accessories** |  |
| 8PM001.00-1 | Intercontec 8-pin female motor connector, crimp range 4x 0.5-2.5 mm² + 4x 0.06-1.0 mm², for 9-14 mm cables, IP67, UL/CSA listed | |
| 8PM002.00-1 | Intercontec 8-pin female motor connector, crimp range 4x 2.5-4.0 mm² + 4x 0.06-1.0 mm², soldering range 4x 0.5-4.0 mm² + 4x 0.06-1.5 mm² for 14-17 mm cables, IP67, UL/CSA listed | |
| 8PM003.00-1 | Intercontec 8-pin female motor connector, crimp range 4x 1.5-10 mm² + 4x 0.5-2.5 mm², for 17-26 mm cables, IP67, UL/CSA listed | |

Table 163: 8PM001.00-1, 8PM002.00-1, 8PM003.00-1 - Order data

### 7.2.2 Technical data

| Model number | 8PM001.00-1 | 8PM002.00-1 | 8PM003.00-1 |
|---|---|---|---|
| **General information** | | | |
| Insulator | PA 6.6 / PBT, UL94/V0 listed | | |
| Contacts | 8 (4 power and 4 signal contacts) | | |
| Protective ground connection on housing | According to VDE 0627 | | |
| Certification | | | |
| UL/CSA | Yes | | |
| **Electrical characteristics** | | | |
| Overvoltage category | 3 | | |
| Power contacts | | | |
| Contact resistance | <3 mΩ | | <1 mΩ |
| Nominal voltage | 630 VAC / VDC | | |
| Nominal current | 30 A | | 75 A |
| Test voltage (L - L) | 6000 V | | |
| Signal contacts | | | |
| Contact resistance | <5 mΩ | | <3 mΩ |
| Nominal voltage | 250 VAC / VDC | | 630 VAC / VDC |
| Nominal current | 10 A | | 30 A |
| Test voltage (L - L) | 2500 V | | 4000 V |
| **Operating conditions** | | | |
| Degree of pollution in accordance with EN 60664-1 | 3 | | |
| EN 60529 protection | IP67 when connected | | |
| **Environmental conditions** | | | |
| Temperature | | | |
| Operation | -20 to 130°C | | |
| Altitude | | | |
| Operation | Up to 2000 m | | |

Table 164: 8PM001.00-1, 8PM002.00-1, 8PM003.00-1 - Technical data

| Model number | 8PM001.00-1 | 8PM002.00-1 | 8PM003.00-1 |
|---|---|---|---|
| **Mechanical characteristics** | | | |
| Housing | | | |
| Material | Zinc die cast / brass, nickel plated | | Magnesium die cast / aluminum, nickel plated |
| Crimp range | 4x 0.5 - 2.5 mm² + 4x 0.06 - 1 mm² | 4x 2.5 - 4 mm² + 4x 0.06 - 1 mm² | 4x 1.5 - 10 mm² + 4x 0.5 - 2.5 mm² |
| Gasket | FPM / HNBR | | |
| Connector size | Size 1 | | Size 1.5 |
| Connection cycles | >50 | | |
| Cable terminals | 9.5 - 14.5 mm | 14 to 17 mm | 17 to 26 mm |
| **Manufacturer information** | | | |
| Manufacturer | INTERCONTEC (www.intercontec.biz) | | |
| Manufacturer's product ID | BSTA 108 FR 19 58 0036 000 | BSTA 108 FR 35 59 0036 000 | CSTA 264 FR 48 25 0001 000 |

Table 164: 8PM001.00-1, 8PM002.00-1, 8PM003.00-1 - Technical data

## 7.3 Encoder connectors

### 7.3.1 EnDat connectors

#### 7.3.1.1 Order data

| Model number | Short description | Figure |
|---|---|---|
| | **Accessories** | |
| 8PE001.00-1 | Intercontec 17-pin female EnDat connector, crimp range 17x 0.06-1.0 mm², for 9-12 mm cables, IP67 |  |

Table 165: 8PE001.00-1 - Order data

#### 7.3.1.2 Technical data

| Model number | 8PE001.00-1 |
|---|---|
| **General information** | |
| Insulator | PA 6.6 / PBT, UL94/V0 listed |
| Contacts | 17 signal contacts |
| Protective ground connection on housing | According to VDE 0627 |
| **Electrical properties** | |
| Overvoltage category | 3 |
| Signal contacts | |
| Contact resistance | <5 mΩ |
| Nominal voltage | 125 V |
| Nominal current | 9 A |
| Test voltage (L - L) | 2500 V |
| **Operating conditions** | |
| Pollution degree per EN 61800-5-1 | 3 |
| Degree of protection per EN 60529 | IP67 when connected |
| **Ambient conditions** | |
| Temperature | |
| Operation | -20 to 130°C |
| Elevation | |
| Operation | Up to 2000 m |
| **Mechanical properties** | |
| Housing | |
| Material | Zinc die cast / brass, nickel plated |
| Crimp range | 17x 0.06 - 1 mm² |
| Gasket | FPM / HNBR |
| Connector size | Size 1 |
| Mating cycles | >50 |

Table 166: 8PE001.00-1 - Technical data

| Model number | 8PE001.00-1 |
|---|---|
| Cable terminals | 5.5 to 10.5 mm |
| **Manufacturer information** | |
| Manufacturer | INTERCONTEC (www.intercontec.biz) |
| Manufacturer's product ID | ASTA 035 FR 11 10 0035 000 |

Table 166: 8PE001.00-1 - Technical data





Provided by Industrial Automation Co. • www.industrialautomationco.com • Parts & Repair: 877-727-8757

## 7.3.2 Resolver connectors

### 7.3.2.1 Order data

| Model number | Short description | Figure |
|---|---|---|
| | **Accessories** |  |
| 8PR001.00-1 | Intercontec 12-pin female resolver connector, crimp range 12x 0.06-1.0 mm², for 5.5-10.5 mm cables, IP67 | |

Table 167: 8PR001.00-1 - Order data

### 7.3.2.2 Technical data

| Model number | 8PR001.00-1 |
|---|---|
| **General information** | |
| Insulator | PA 6.6 / PBT, UL94/V0 listed |
| Contacts | 12 signal contacts |
| Protective ground connection on housing | According to VDE 0627 |
| **Electrical properties** | |
| Overvoltage category | 3 |
| Signal contacts | |
| Contact resistance | <5 mΩ |
| Nominal voltage | 160 V |
| Nominal current | 9 A |
| Test voltage (L - L) | 2500 V |
| **Operating conditions** | |
| Pollution degree per EN 61800-5-1 | 3 |
| Degree of protection per EN 60529 | IP67 when connected |
| **Ambient conditions** | |
| Temperature | |
| Operation | -20 to 130°C |
| Elevation | |
| Operation | Up to 2000 m |
| **Mechanical properties** | |
| Housing | |
| Material | Zinc die cast / brass, nickel plated |
| Crimp range | 12x 0.06 - 1 mm² |
| Gasket | FPM / HNBR |
| Connector size | Size 1 |
| Mating cycles | >50 |
| Cable terminals | 5.5 to 10.5 mm |
| **Manufacturer information** | |
| Manufacturer | INTERCONTEC (www.intercontec.biz) |
| Manufacturer's product ID | ASTA 021 FR 11 10 0035 000 |

Table 168: 8PR001.00-1 - Technical data

# Chapter 3 • Installation

## 1 General

Installation must take place on a flat surface that is dimensioned correctly. The dimension diagram lists the number and type of mounting screws to be used.

To lift ACOPOS 1640 and ACOPOS 128M, a DIN 580 M6 eye bolt can be screwed into the top of the device:

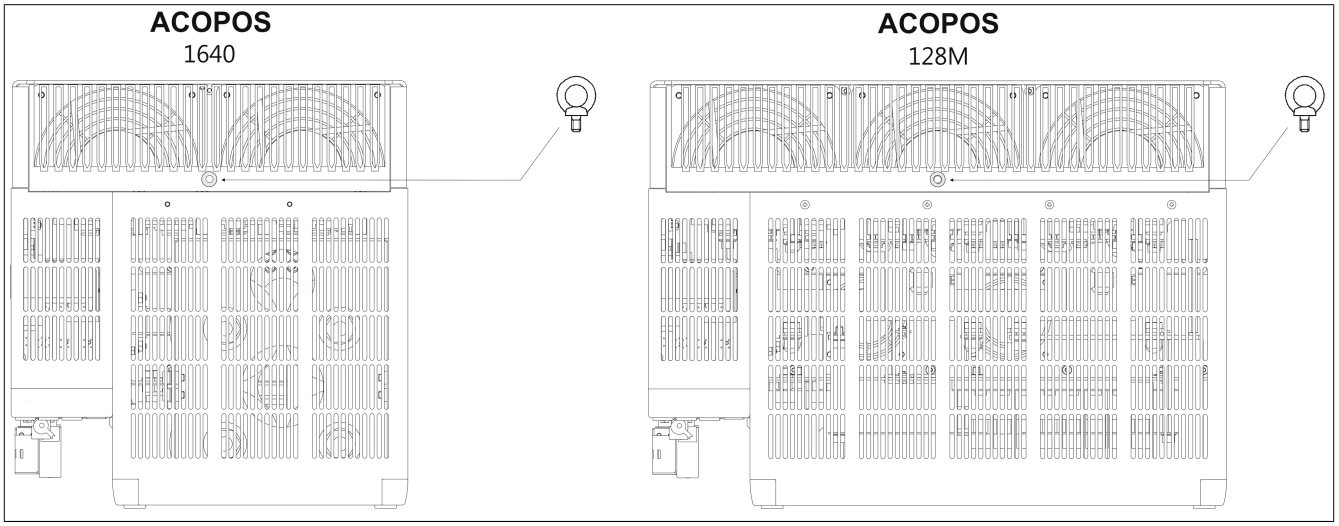


Figure 52: Installation position of the eye bolt for lifting ACOPOS 1640, 128M

ACOPOS servo drives must be installed in control cabinets with at least IP54 protection. [3)]

ACOPOS servo drives can only be installed in environments that correspond to a pollution degree 2 (non-conductive pollution). When installing the device, the specifications listed in the technical data for maximum operating temperature and protection level must be met (see "Technical data" on page 27).

For sufficient air circulation, a clearance of at least 80 mm must be provided above and below the ACOPOS servo drives. ACOPOS servo drives can be directly connected to each other; the required pitch is available in the respective dimension diagrams.



[3)] Except for 8B0WxxxxH000.001-1 braking resistors.

# 2 Dimension diagrams and installation dimensions

## 2.1 ACOPOS 1010, 1016

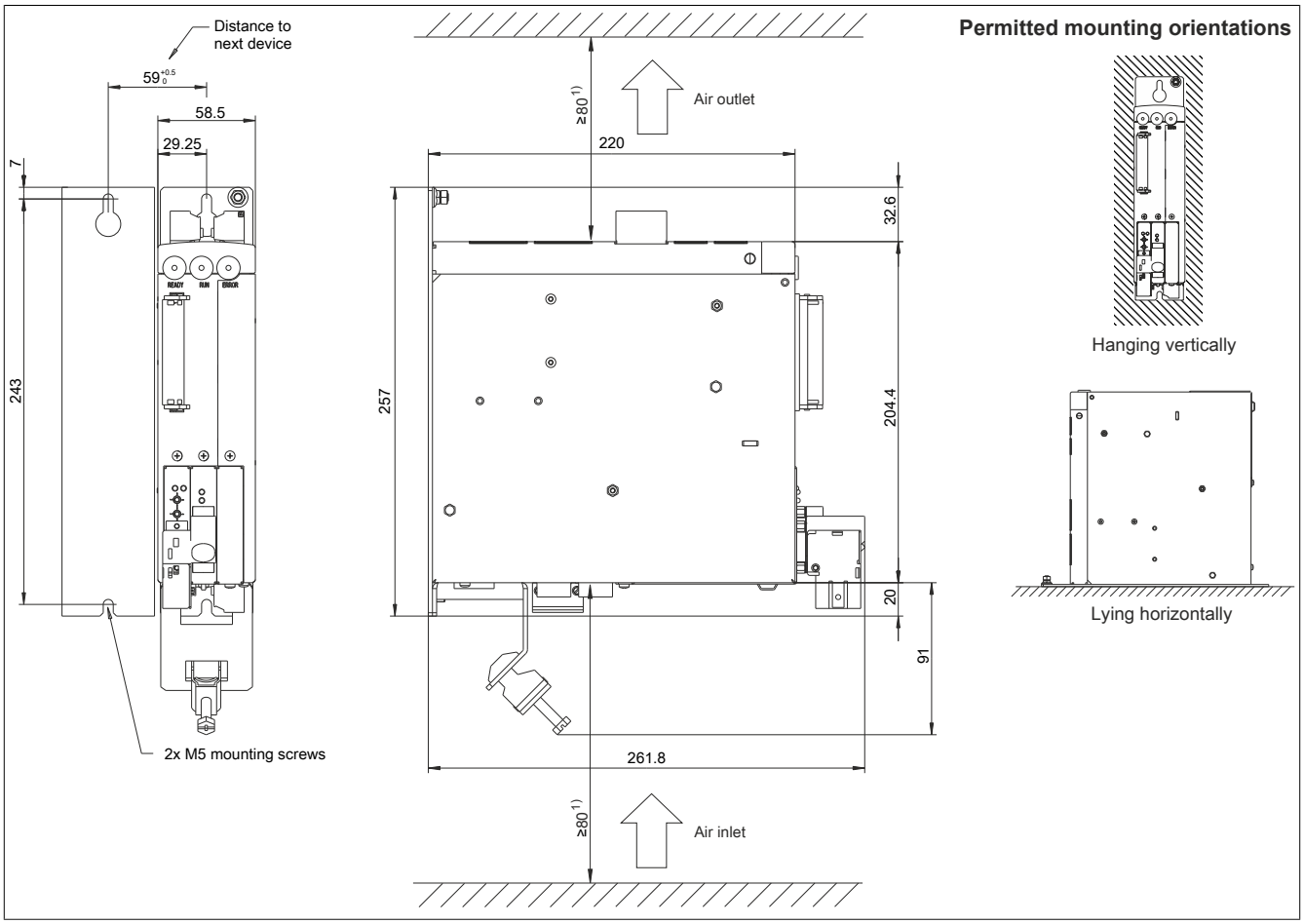


Figure 53: ACOPOS 1010, 1016 - Dimension diagram and installation dimensions

1) For proper air circulation, at least 80 mm clearance must be available above and below the ACOPOS servo drive. Approximately 100 mm clearance is required under the ACOPOS servo drive to prevent cabling problems.

## 2.2 ACOPOS 1022, 1045, 1090

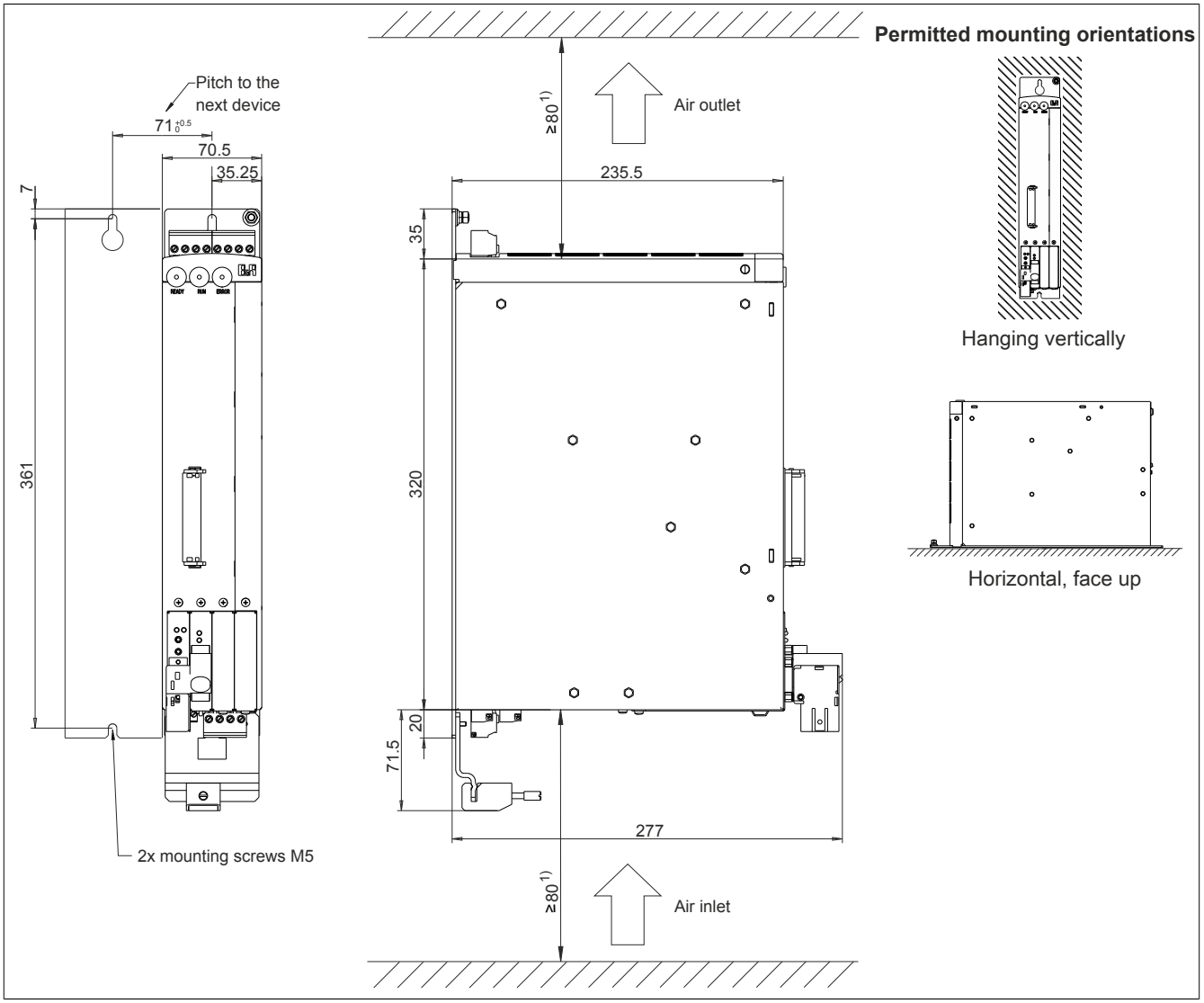


Figure 54: ACOPOS 1022, 1045, 1090 - Dimension diagram and installation dimensions

1) For sufficient air circulation, a clearance of at least 80 mm must be provided above and below the ACOPOS servo drive. At least 100 mm spacing is required under the ACOPOS servo drive to prevent wiring problems.

## 2.3 ACOPOS 1180, 1320

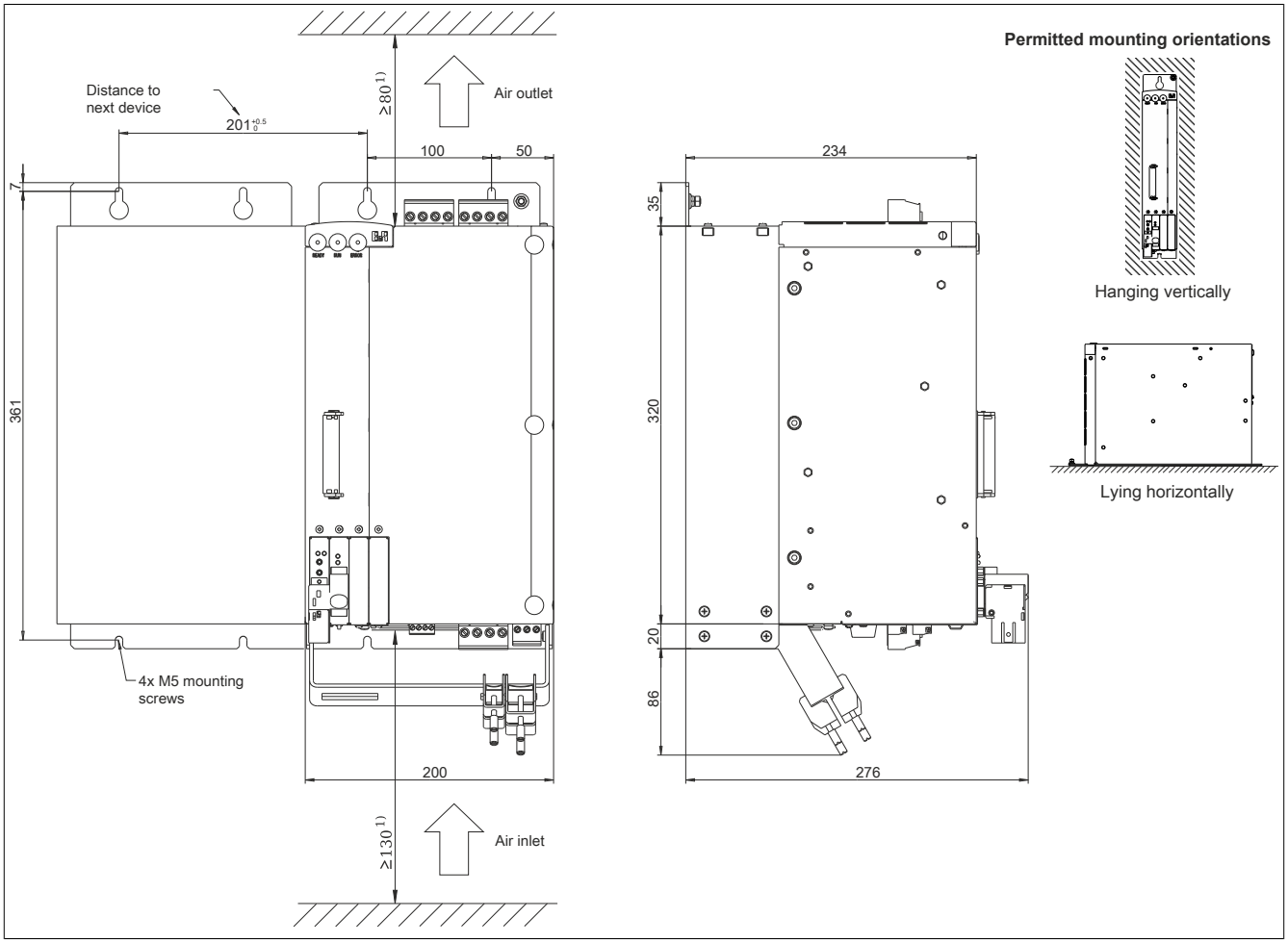


Figure 55: ACOPOS 1180, 1320 - Dimension diagram and installation dimensions

1) For proper air circulation, at least 80 mm clearance must be available above and below the ACOPOS servo drive. At least 130 mm free space is required under the ACOPOS servo drive to prevent cabling problems.

## 2.4 ACOPOS 1640

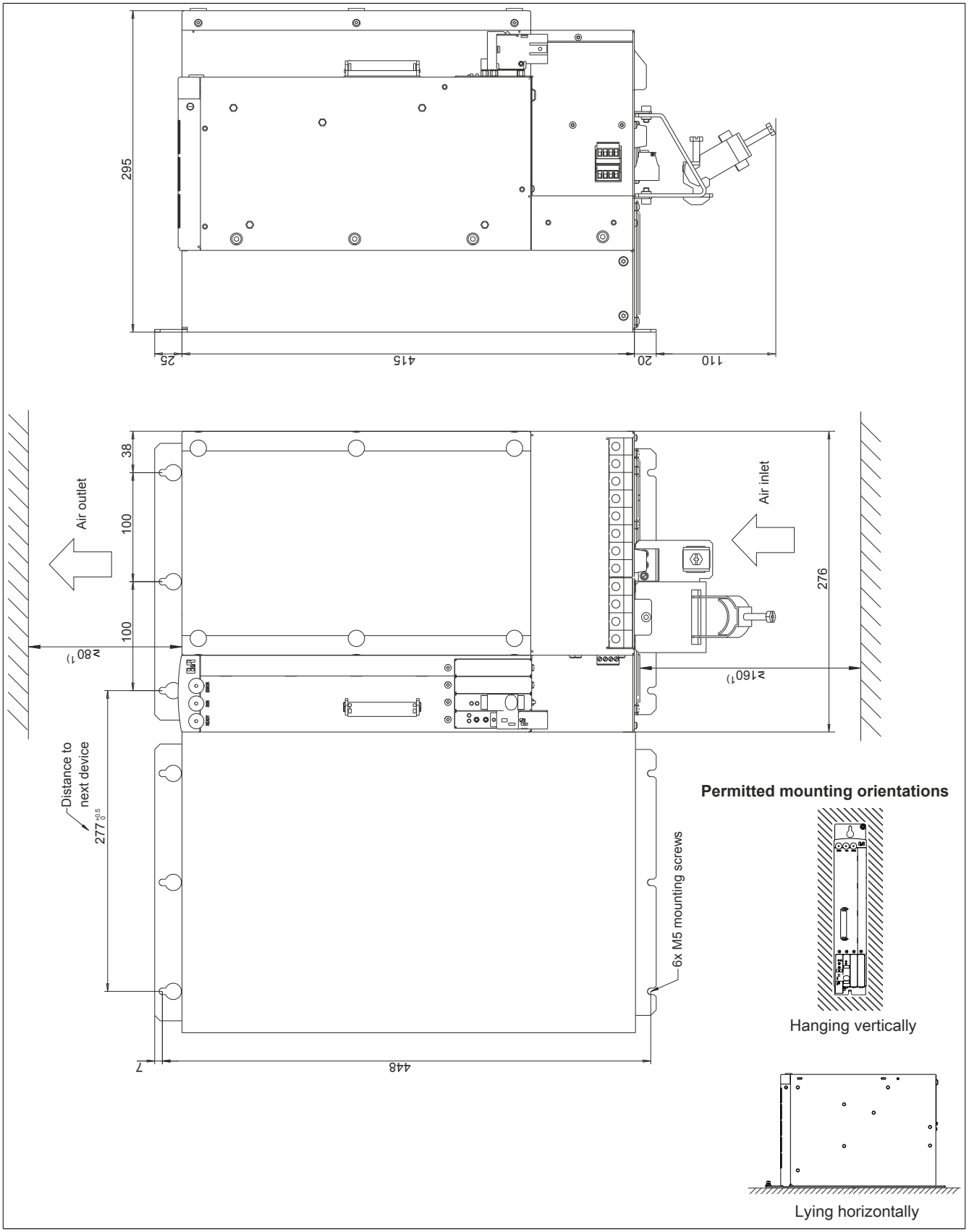


Figure 56: ACOPOS 1640 - Dimension diagram and installation dimensions

1) For proper air circulation, at least 80 mm clearance must be available above and below the ACOPOS servo drive. At least 160 mm free space is required under the ACOPOS servo drive to prevent cabling problems.

## 2.5 ACOPOS 128M

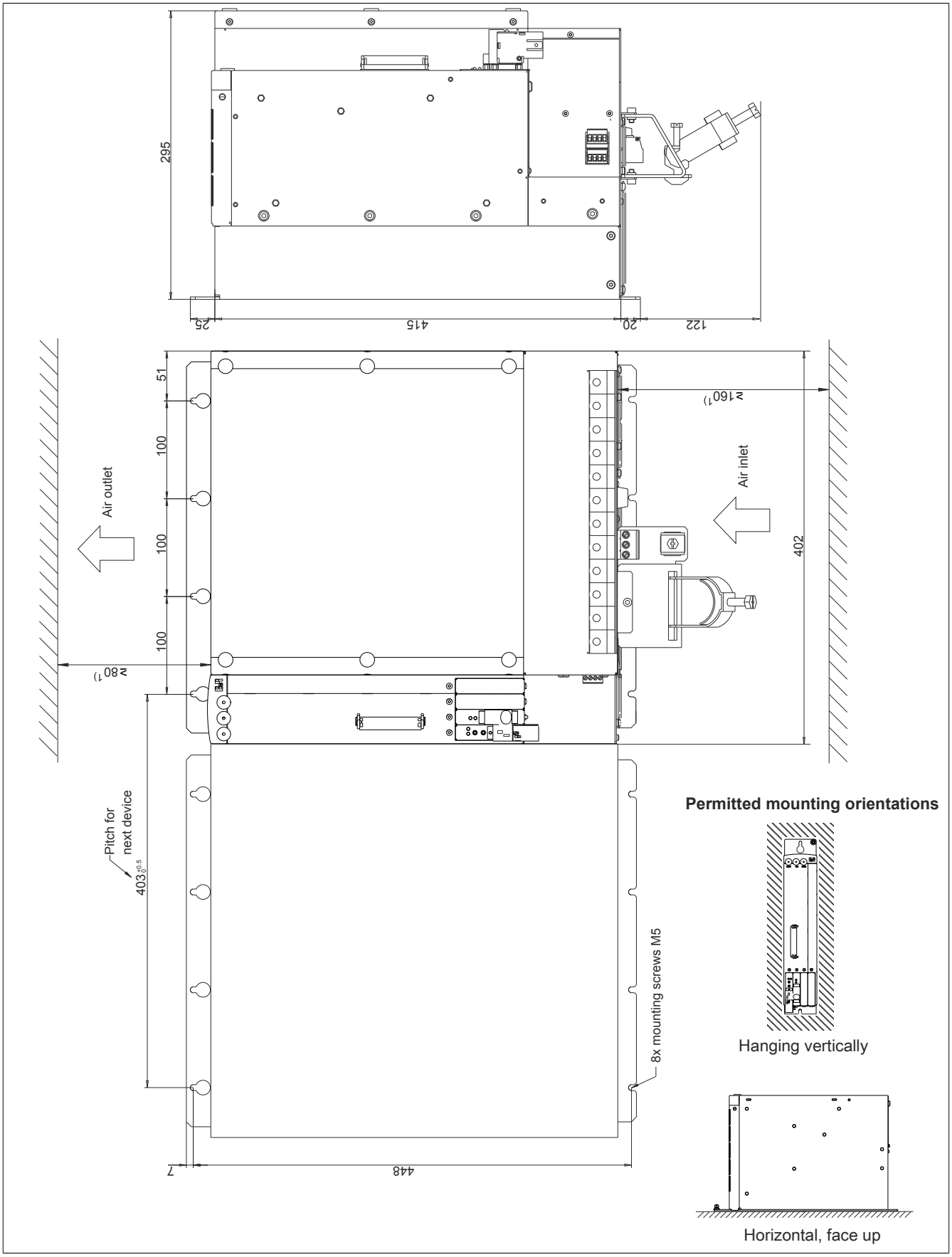


Figure 57: ACOPOS 128M - Dimension diagram and installation dimensions

1) For sufficient air circulation, a clearance of at least 80 mm must be provided above and below the ACOPOS servo drive. Approx. 160 mm free space is required under the ACOPOS servo drive to prevent cabling problems.

## 2.6 External braking resistors

### 2.6.1 8B0W0045H000.001-1, 8B0W0079H000.001-1, 8B0W0096H000.001-1

| | 8B0W0045H000.001-1 | 8B0W0079H000.001-1 | 8B0W0096H000.001-1 |
|---|---|---|---|
| L | 260±2 mm | 460±2 mm | 560±2 mm |
| L1 | 160±2 mm | 360±2 mm | 460±2 mm |

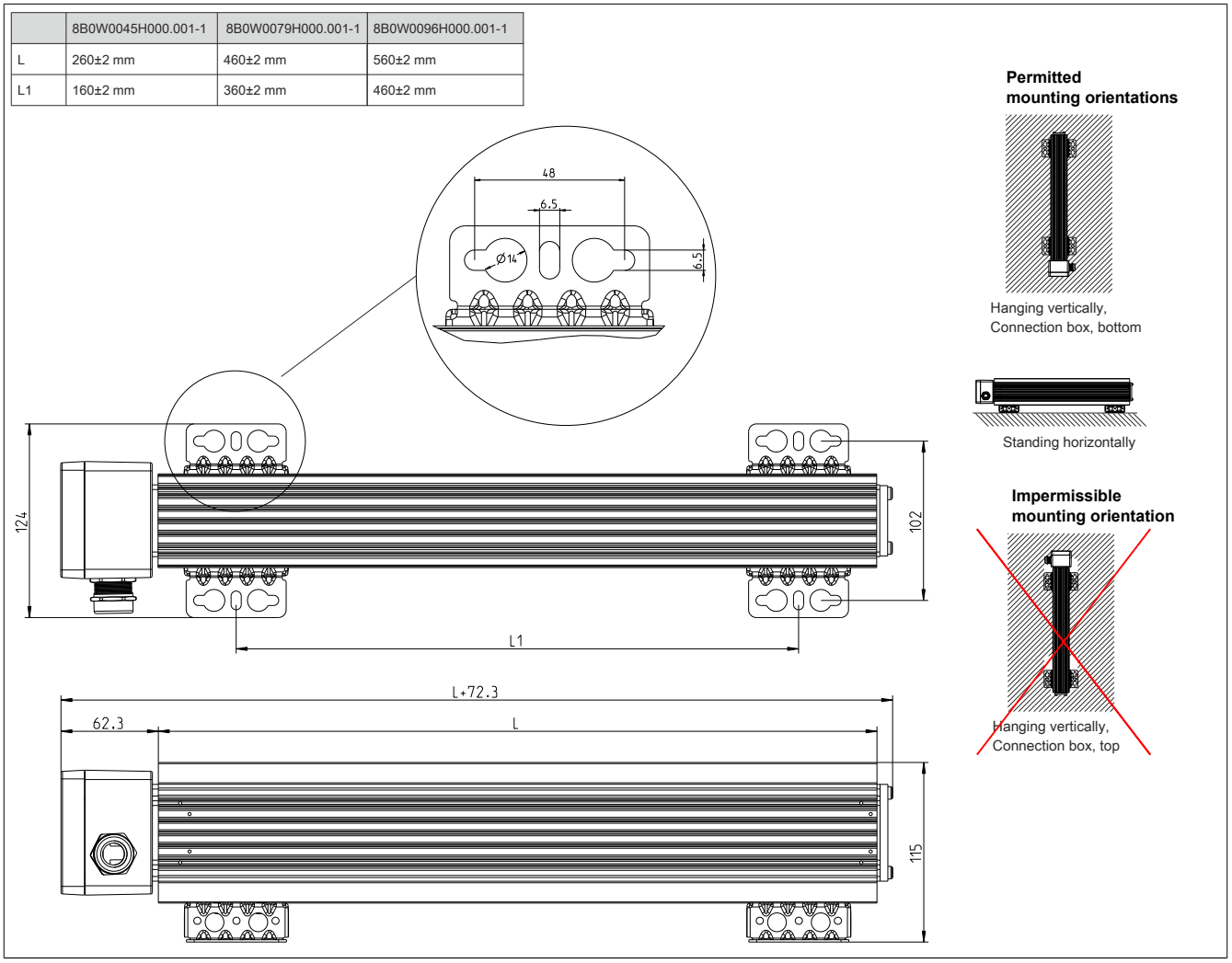


Figure 58: 8B0W0045H000.001-1, 8B0W0079H000.001-1, 8B0W0096H000.001-1 - Dimension diagram

## Warning!

**External braking resistors 8B0W can have very high surface temperatures both during operation and after being switched off!**

**External braking resistor 8B0W - Installation dimensions**

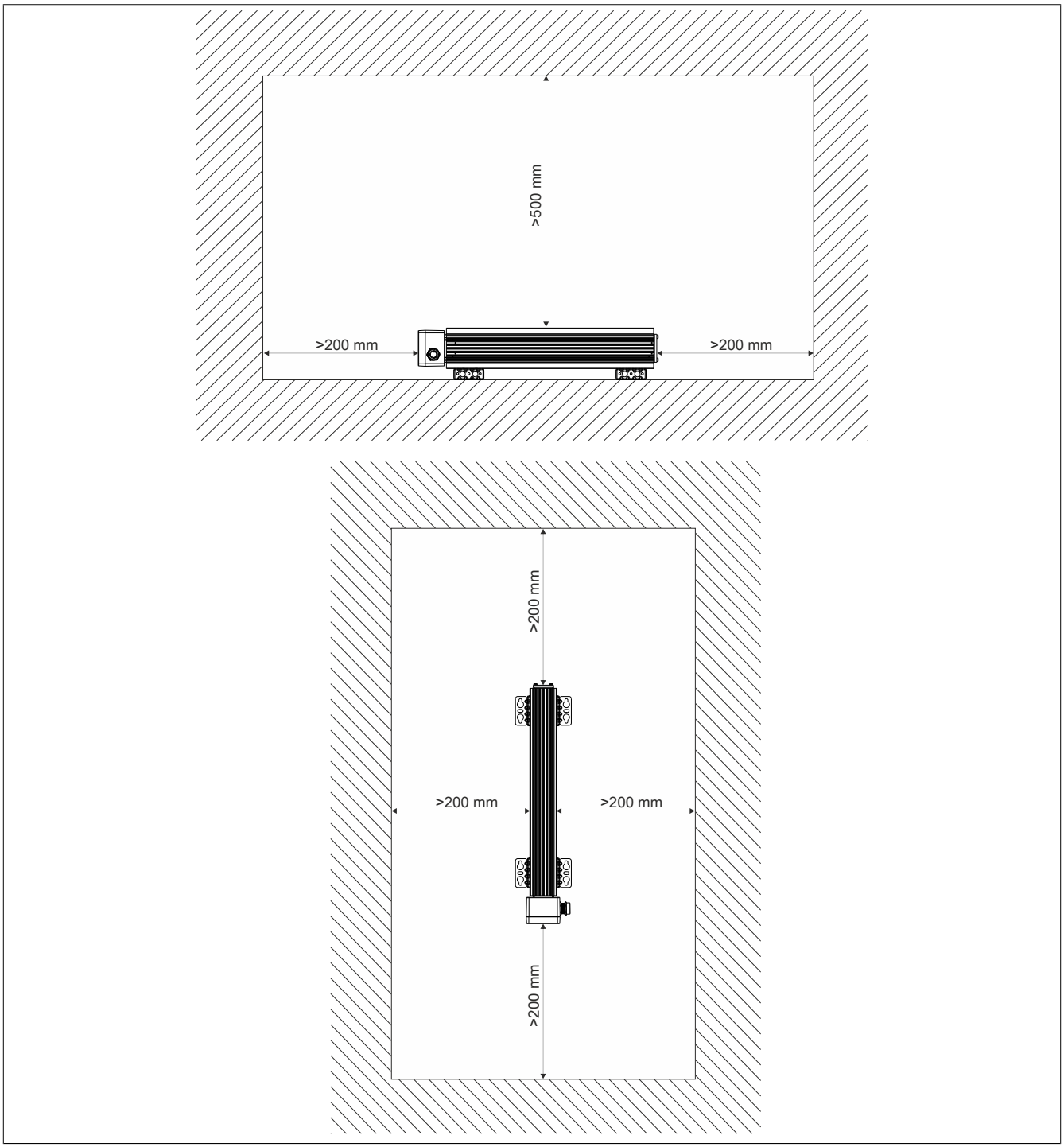


Figure 59: 8B0W external braking resistors - Installation dimensions



Provided by Industrial Automation Co. • www.industrialautomationco.com • Parts & Repair: 877-727-8757

# 3 Installing and removing plug-in modules

## 3.1 General information

All ACOPOS servo drives are equipped with three or four slots for plug-in modules depending on the size of the drive. Certain module arrangements must be used (see "Slot overview for ACOPOS plug-in modules" on page 104).

### Caution!

**For the installation and removal of plug-in modules, the specifications listed in section "Protection against electrostatic discharge" on page 21 must be followed!**

## 3.2 Installation

1. Disconnect the ACOPOS servo drive from the power mains and prevent reconnection.
2. Switch off the 24 VDC supply voltage.
3. Remove the screw from the bottom of the slot cover.
4. Loosen the screw on the front side.
5. Remove the slot cover.




Figure 60: Installing ACOPOS plug-in modules

6. Insert the plug-in module in available slot (see figure above).
7. Fasten the plug-in module with the two screws.
8. Switch on the 24 VDC supply voltage.
9. Connect the ACOPOS servo drive to the power mains.

## 3.3 Removal

1. Disconnect the ACOPOS servo drive from the power mains and prevent reconnection.
2. Switch off the 24 VDC supply voltage.
3. Remove the screw from bottom of plug-in module.
4. Loosen the screw on the front side of the plug-in module.
5. Remove the plug-in module.
6. Insert the slot cover in the open slot.
7. Fasten the slot cover with the two screws.
8. Switch on the 24 VDC supply voltage.
9. Connect the ACOPOS servo drive to the power mains.

# 4 Installing devices from different ACOPOS series directly next to each other

When installing various ACOPOS series devices directly next to each other, we recommend aligning the vertical position so that the LED displays of the respective devices are lined up.

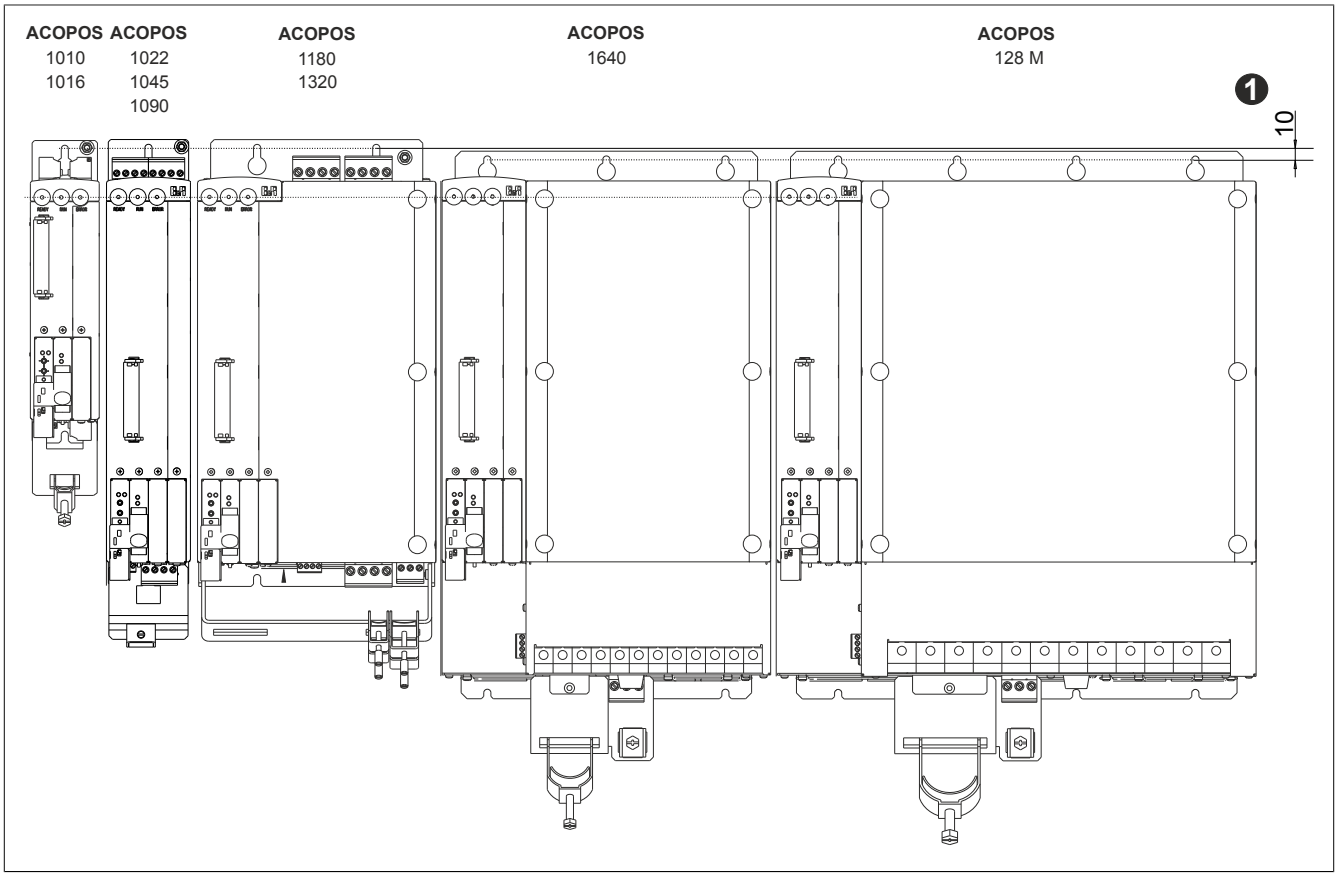


Figure 61: Installing various ACOPOS series devices directly next to each other

1) Vertical position offset of the upper mounting holes

You can see from the image above that the vertical offset of the upper mounting holes is 10 mm. The distances for the lower mounting holes and the number and size of the screws required can be taken from the dimensional diagrams for the respective ACOPOS servo drives.

Overview of the vertical offsets:

| Installed next to | | ACOPOS | | | | | | | | |
|---|---|---|---|---|---|---|---|---|---|---|
| | | 1010 | 1016 | 1022 | 1045 | 1090 | 1180 | 1320 | 1640 | 128 M |
| ACOPOS | 1010 | No offset | | | | | | | 10 mm | |
| | 1016 | | | | | | | | | |
| | 1022 | | | | | | | | | |
| | 1045 | | | | | | | | | |
| | 1090 | | | | | | | | | |
| | 1180 | | | | | | | | | |
| | 1320 | | | | | | | | | |
| | 1640 | 10 mm | | | | | | | No offset | |
| | 128M | | | | | | | | | |

Table 169: Overview of the vertical offsets (ACOPOS - ACOPOS)

# 5 Using cooling systems in control cabinets

Cooling systems are generally used to maintain permissible ambient temperature levels of the ACOPOS servo drives in control cabinets.

For details about dimensioning cooling systems, see "Dimensioning cooling systems for cooling control cabinets" on page 250.

## 5.1 Natural convection

The power dissipation is radiated outwards via the control cabinet walls.

### Warning!

**Only use well-sealed control cabinets. Otherwise, contaminated ambient air can penetrate the control cabinet!**

## 5.2 Using filter fans

Filter fans and outlet filters should be arranged on the control cabinet so that air is taken in from below and exits above.

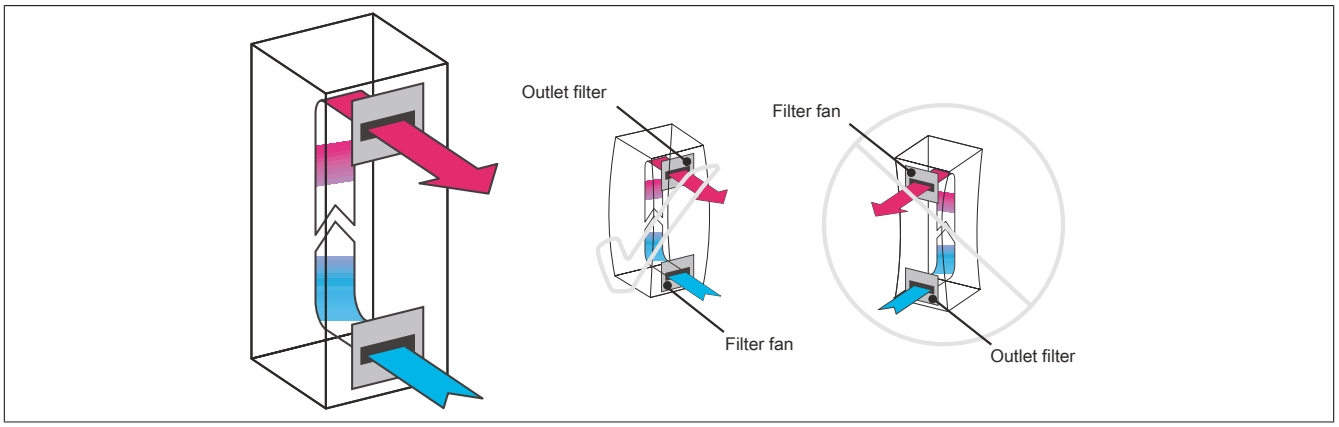


Figure 62: Filter fans - Function diagram

### Caution!

**Contaminated air can penetrate improperly sealed control cabinets when using a fan intake! This type of air flow is to be avoided.**

### Warning!

**Only use well-sealed control cabinets. Otherwise, contaminated ambient air can penetrate the control cabinet!** [4)]

[4)] Control cabinets that – taking into account the location and physical environmental conditions – provide adequate protection against the ingress of solid foreign objects (dust, metal cuttings, etc.) and liquids (coolant, etc.). For details, see EN 60204-1.

## 5.3 Using air/air heat exchangers

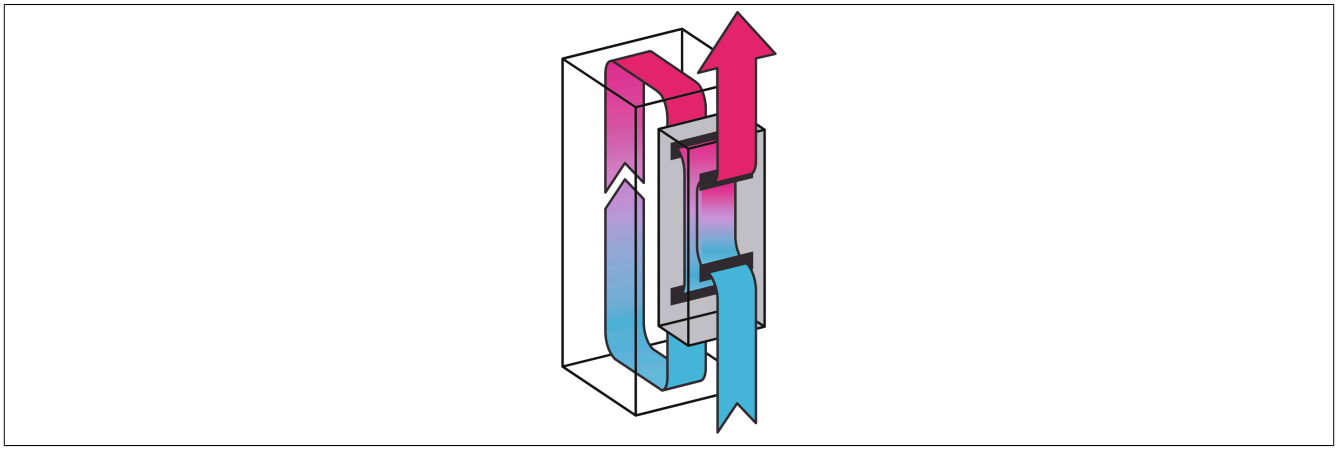

Figure 63: Air/Air heat exchangers - Function diagram

### Caution!

**Uniform air circulation must be ensured in the control cabinet. Air inlets and outlets for the internal circulation of the air/air heat exchanger are not permitted to be covered since this would prevent sufficient air circulation in the control cabinet.**

**Sufficient clearance (>200 mm) in front of air inlets and outlets is recommended.**

### Caution!

**If the control cabinet contains modules or electronic components with their own fans, make sure that the direction of air flow does not go against the cooling system's flow of cool air. This can create air short circuits that prevent sufficient cooling inside the control cabinet.**

### Warning!

**Only use well-sealed control cabinets. Otherwise, contaminated ambient air can penetrate the control cabinet!**

Installing air/air heat exchangers behind mounting plates should generally be avoided. If this is necessary, however, then corresponding ventilation plates must be used. Air inlets and outlets must also be made in the mounting plate.

## 5.4 Using air/water heat exchangers

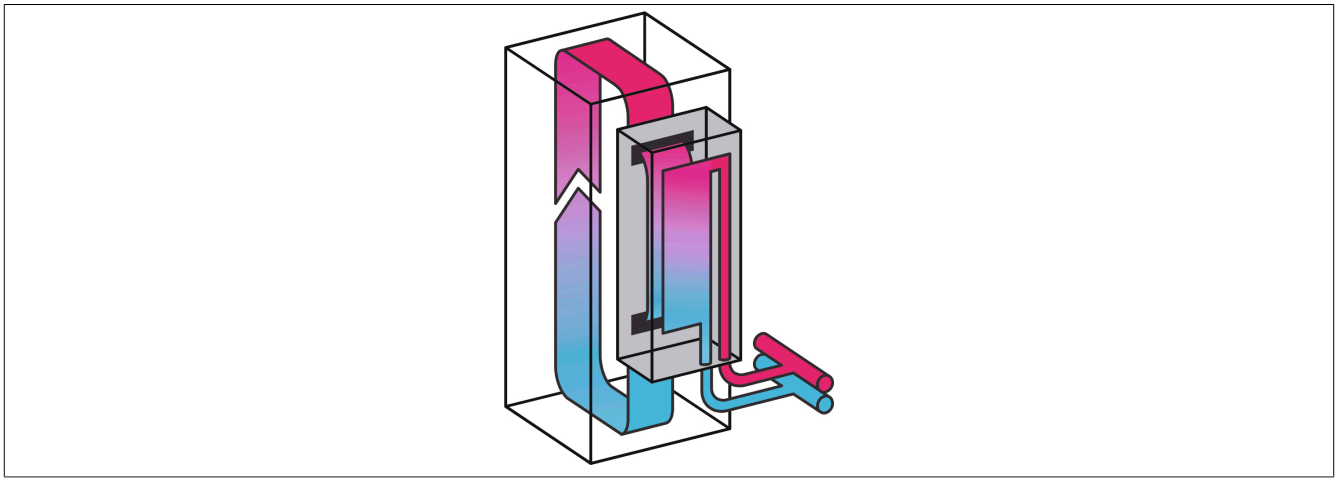

Figure 64: Air/Water heat exchangers - Function diagram

### Caution!

**Uniform air circulation must be ensured in the control cabinet. Air inlets and outlets for the internal circulation of the air/water heat exchanger are not permitted to be covered since this would prevent sufficient air circulation in the control cabinet.**

**Sufficient clearance (>200 mm) in front of air inlets and outlets is recommended.**

### Caution!

**If the control cabinet contains modules or electronic components with their own fans, make sure that the direction of air flow does not go against the cooling system's flow of cool air. This can create air short circuits that prevent sufficient cooling inside the control cabinet.**

### Warning!

**Only use well-sealed control cabinets. Otherwise, contaminated ambient air can penetrate the control cabinet!**

Installing air/water heat exchangers behind mounting plates should generally be avoided. If this is necessary, however, then corresponding ventilation plates must be used. Air inlets and outlets must also be made in the mounting plate.

## 5.5 Using cooling units

### 5.5.1 General information

## Caution!

**Incorrect installation of cooling units may cause condensation which can damage the ACOPOS servo drives installed there!**

**Condensation can enter the ACOPOS servo drives with the cooled air flow!**

## Warning!

**Only use well-sealed control cabinets. Otherwise, ambient air can penetrate and cause condensation!**

During operation with the control cabinet doors open (e.g. service), the ACOPOS servo drives are not allowed to be cooler than the air in the control cabinet at any time after the doors are closed.

To keep the temperature of the ACOPOS servo drives and the control cabinet at the same level, the cooling unit must remain in operation even when the system is switched off.

Cooling units must be installed in a way that prevents condensation from dripping into the ACOPOS servo drives. This should be considered when selecting the control cabinet (special construction for use of cooling units on top of the control cabinet).

Also make sure that condensed water that forms in the cooling unit fan when it is switched off cannot sprinkle into the ACOPOS servo drives.

Make sure the temperature setting of the cooling unit is correct! Only set the control cabinet's internal temperature as low as is necessary.

Be sure to follow the installation guidelines for the cooling unit provided in its operating manual!

### 5.5.2 Placing a cooling unit on top of the control cabinet

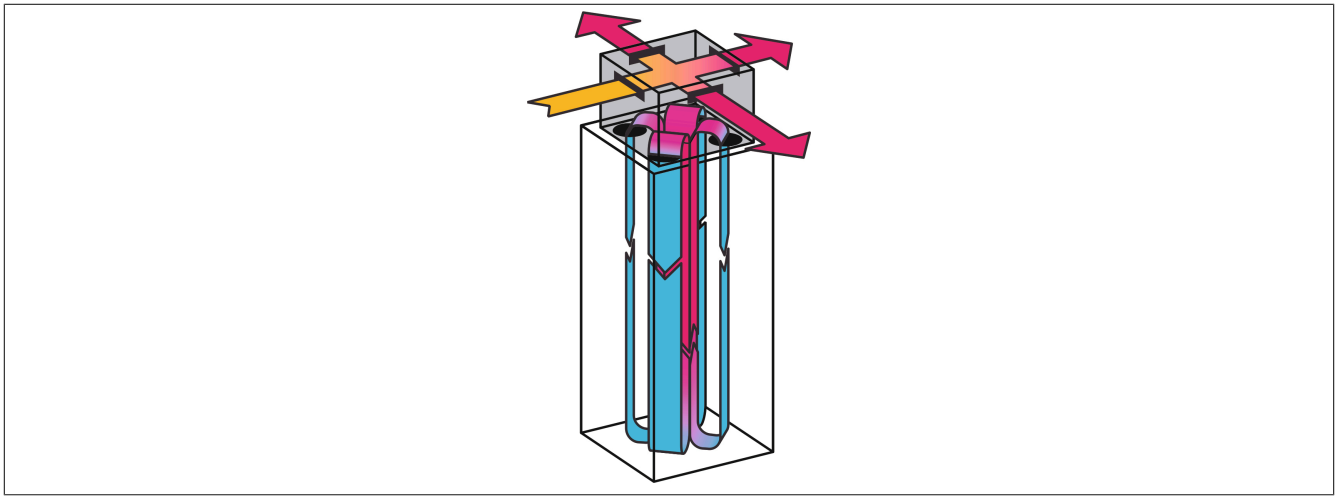

Figure 65: Placing a cooling unit on top of the control cabinet

## Caution!

**When installing cooling units on top of the control cabinet, particular attention must be paid to targeted air routing! The flow of cool air must be directed by the airflow systems to the lowest possible point in the control cabinet (see figure above).**

## Caution!

**Make sure that the flow of cool air in the cooling system is not directed against the air flow from the fans in the ACOPOS servo drive. This could create air pockets that would prevent sufficient cooling of ACOPOS servo drives.**

Condensation must be directed off the cooling unit according to manufacturer specifications so that it does not end up in the ACOPOS servo drives.

### 5.5.3 Placing a cooling unit on the front of the control cabinet

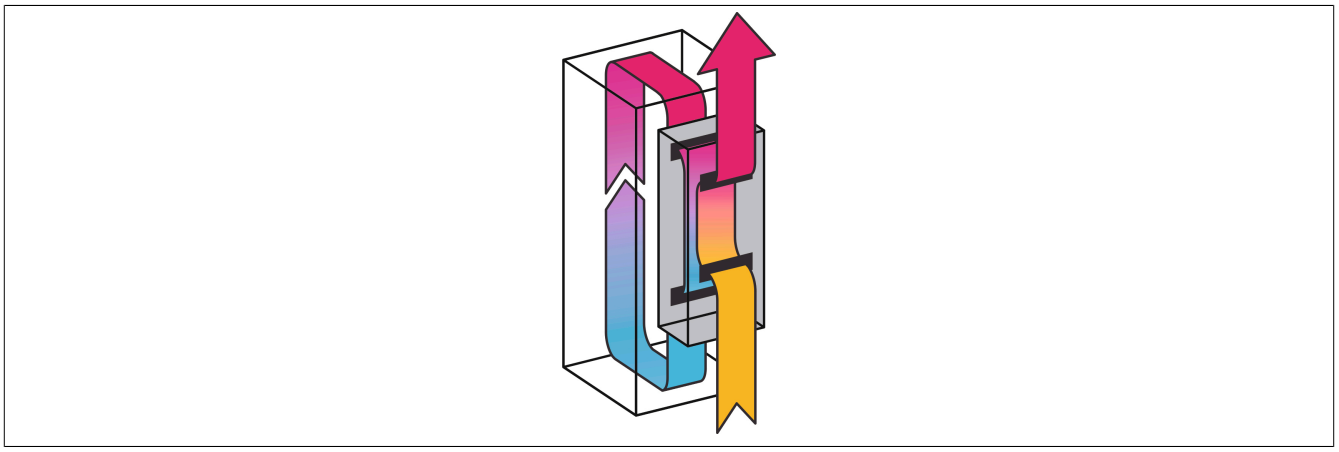

Figure 66: Placing a cooling unit on the front of the control cabinet

## Caution!

**The flow of cool air from the cooling unit must be directed by the airflow systems to the lowest possible point in the control cabinet (see figure above).**

## Caution!

**Make sure that the flow of cool air in the cooling system is not directed against the air flow from the fans in the ACOPOS servo drive. This could create air pockets that would prevent sufficient cooling of ACOPOS servo drives.**

Condensation must be directed off the cooling unit according to manufacturer specifications so that it does not end up in the ACOPOS servo drives.

# 6 Motor cables

## 6.1 Assembly example (module-side) of a 1.5 mm² motor cable

1. Shorten the motor cable to the required length.
2. Strip the motor cable on the module end of the cable (make sure not to irreparably damage the complete braided shield).

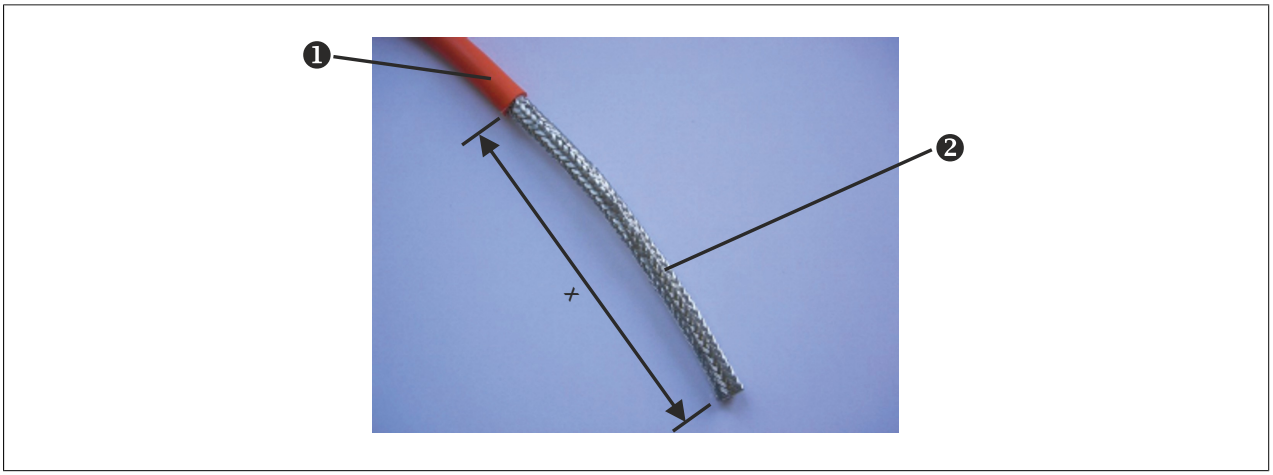


Figure 67: Stripped cable end

1 Cable jacket
2 Complete braided shield
x Wire stripping length

| Motor cable | Wire stripping length x |
|---|---|
| 1.5 mm² | 75 mm |
| 4 mm² | 150 mm |
| 10 mm² | 180 mm |
| 35 mm² | 180 mm |

3. Pull the cable shield over the cable jacket and cut off the stranding elements.

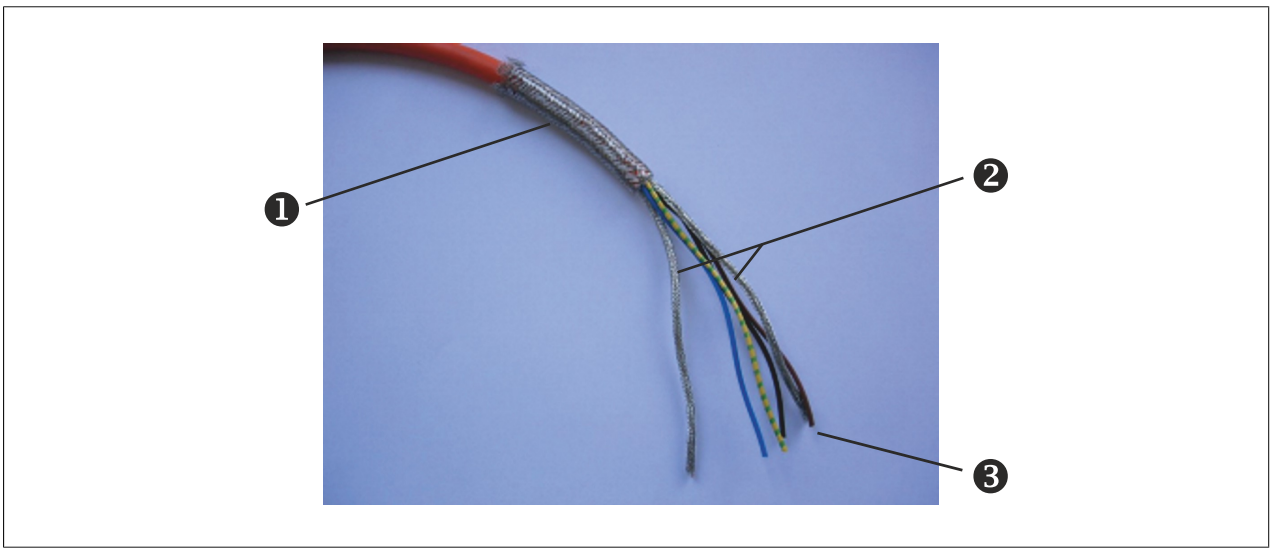


Figure 68: Cable end with shielding mesh pulled back

1 Retracted complete braided shield
2 Separately shielded signal lines
3 Power lines

4. Pull the separately shielded signal lines (2x 2 conductors) out of the braided shields.

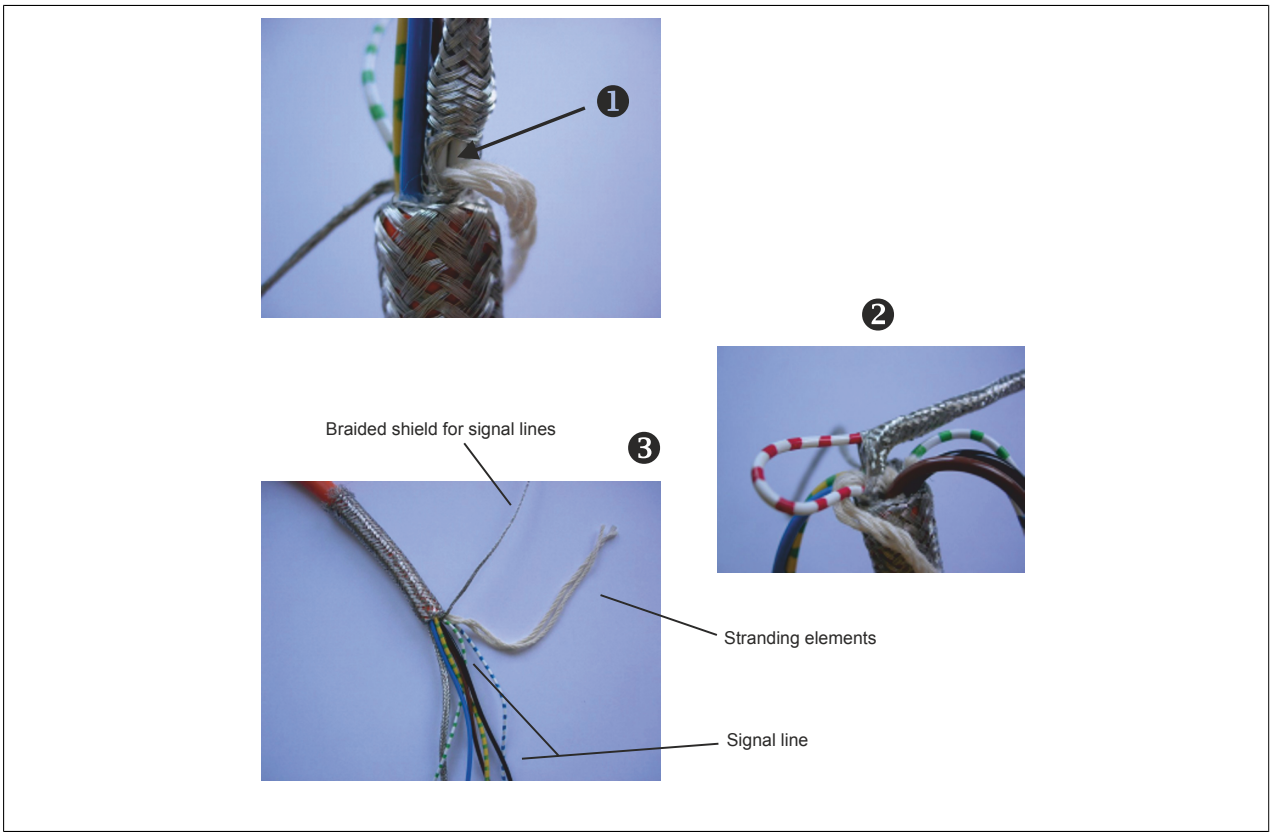


Figure 69: Pulling out the separately shielded signal lines

1 Open the braided shields of the signal lines as close as possible to the cable jacket.
2 Pull the stranding elements and conductors out of the braided shields.
3 Intermediate result

5. Cut off the stranding elements of the separately shielded conductors.

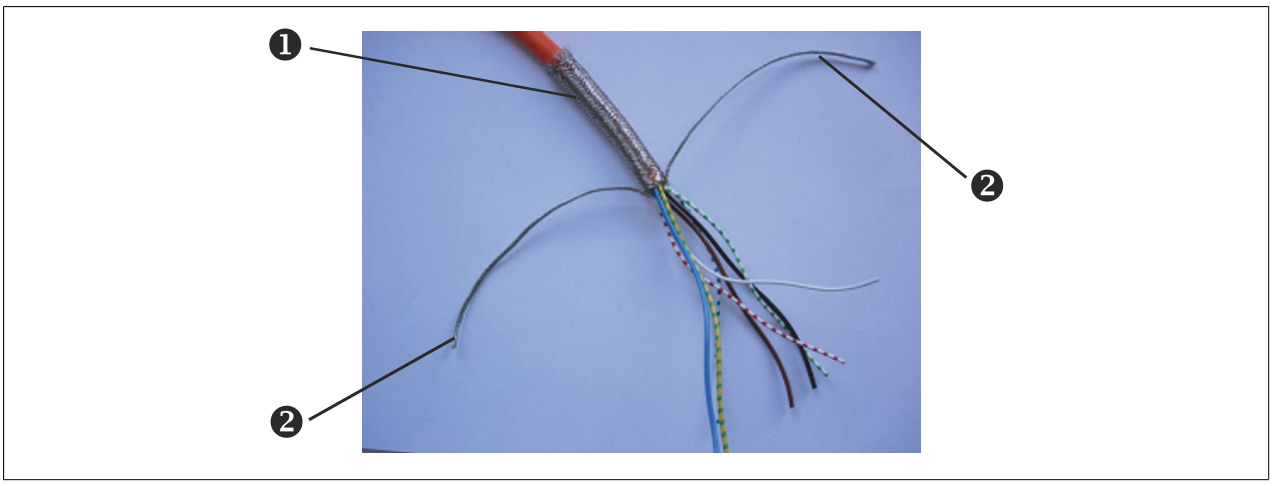


Figure 70: Cable end without stranding elements

1 Complete braided shield
2 Braided shield for signal lines





Provided by Industrial Automation Co. • www.industrialautomationco.com • Parts & Repair: 877-727-8757

6. Shorten the braided shields to a length of approx. 40 mm and pull the braided shields of the signal lines back over the cable jacket.

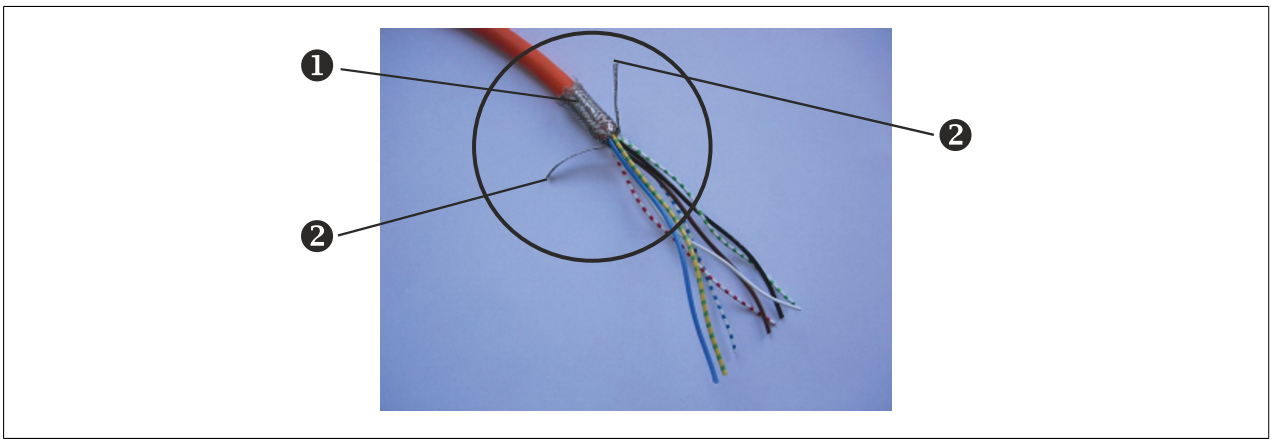


Figure 71: Cable ends with shortened shielding mesh

1 Complete braided shield
2 Braided shield for signal lines

7. Attach all braided shields to the cable sheath using heat shrink tubing (approx. 20 mm long), leaving some of the braided shield free.

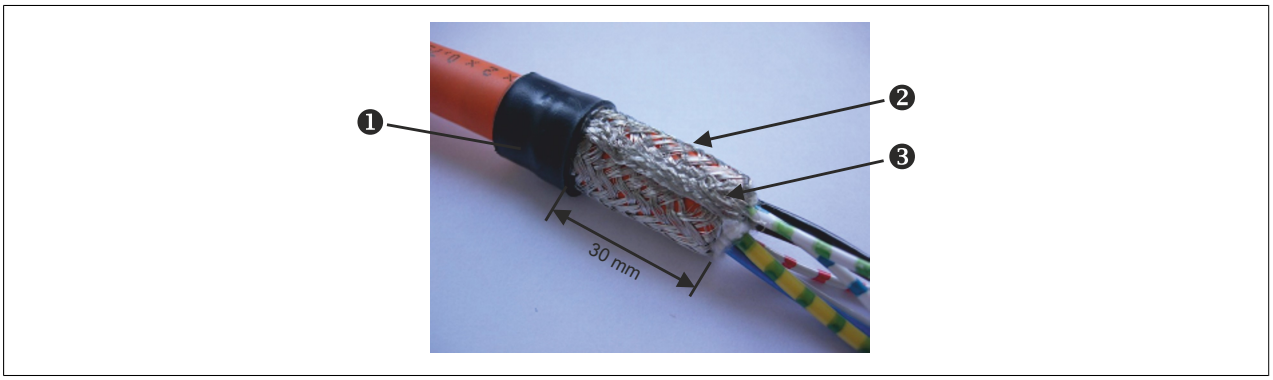


Figure 72: Attaching the shielding mesh

1 Heat shrink tubing
2 Cable shield
3 Braided shield for signal lines

8. Strip the ends of the conductors and provide them with wire end sleeves.

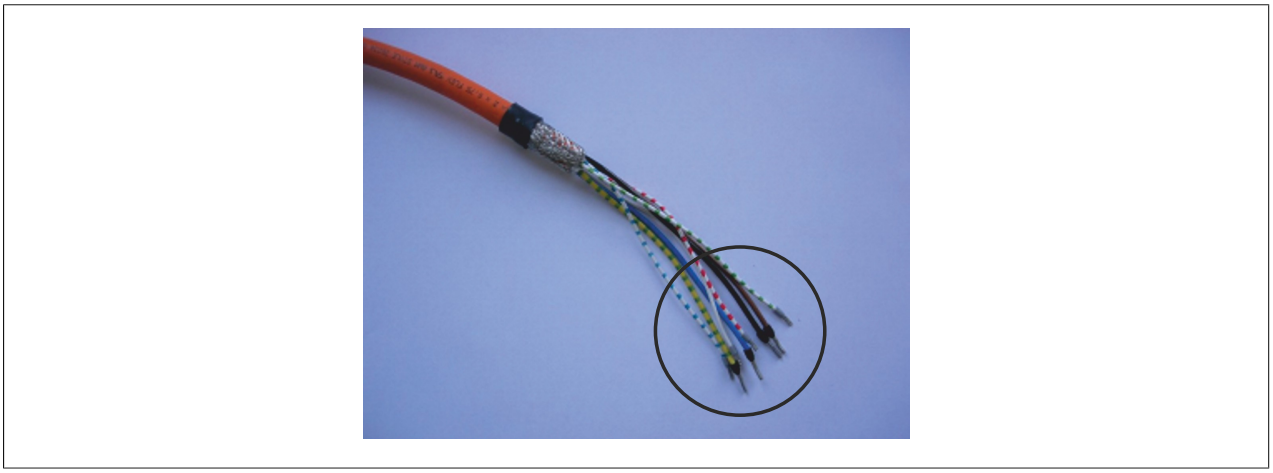

Figure 73: Wire ends with wire end sleeves

| Motor cable | Wire stripping lengths | | Wire end sleeves | |
|---|---|---|---|---|
| | Power lines | Signal line | Power lines | Signal line |
| 1.5 mm² | 10 mm | 8 mm | 1.5 mm² | 0.75 mm² |
| 4 mm² | 12 mm | 8 mm | 4 mm² | 1 mm² |
| 10 mm² | 18 mm | 8 mm | 10 mm² | 1.5 mm² |
| 35 mm² | 18 mm | 8 mm | 35 mm² | 1.5 mm² |



Provided by Industrial Automation Co. • www.industrialautomationco.com • Parts & Repair: 877-727-8757

# Chapter 4 • Dimensioning

## 1 Power mains connection

### 1.1 General information

#### 1.1.1 Mains configurations

The power mains connection is made using terminals X3 / L1, L2, L3 and PE. ACOPOS servo drives can be directly connected to TT and TN power mains (these are three-phase systems with grounded neutral).

When using ungrounded IT power mains (three-phase systems without grounded neutral or with an impedance grounded neutral) or TN-S power mains with grounded phase conductor and protective ground conductor, isolation transformers must be used. The secondary neutral must be grounded and connected to the ACOPOS protective ground conductor. In this way, it is possible to prevent overvoltages between external conductors and the ACOPOS housing. Three-phase isolation transformers with the corresponding input and output voltages and a vector group with secondary neutral can be used (e.g. 3x 400 V / 3x 400 V, Dyn5).

In the USA, TT and TN power mains are among the most common mains systems and are referred to as "Delta/Wye with grounded Wye neutral". IT power mains systems are also known as "systems with ungrounded secondary" and TN-S power mains with grounded phase conductor as "Delta / Delta with grounded leg".

**Danger!**

**ACOPOS servo drives are only permitted to be operated directly on grounded, three-phase industrial power system (TN, TT power system). When using the servo drives in residential areas, commercial areas or small businesses, additional filtering measures must be implemented by the user.**

**Danger!**

**Servo drives are not permitted to be operated directly on IT and TN-S mains with a grounded phase conductor and protective ground conductor!**

**Warning!**

**ACOPOS drive systems are suitable for power mains that can provide a maximum short circuit current (SCCR) of 65 kA at a maximum of 482 V and that are protected with class J fuses.**

**Warning!**

**ACOPOS drive systems are equipped with integrated semiconductor short circuit protection. This semiconductor short circuit protection does not provide protection for branch circuits. Short circuit protection for branch circuits must be implemented in accordance with national directives or other local regulations.**

**Warning!**

**The opening of the branch-circuit protective device may be an indication that a fault current has been interrupted. To reduce the risk of fire or electric shock, current-carrying parts and other components of the controller should be examined and replaced if damaged. If burnout of the current element of an overload relay occurs, the complete overload relay must be replaced.**

**Warning!**

**The power mains short circuit capacity Sk must be 10 times greater than the continuous power of the selected servo drive.**

### 1.1.2 Supply voltage range

The supply voltage range permitted for ACOPOS servo drives can be found in the following table:

| | 8V1010.5xx-2<br>8V1016.5xx-2 | 8V1010.0xx-2<br>8V1016.0xx-2 | 8V1022.0xx-2<br>8V1045.0xx-2<br>8V1090.0xx-2 | 8V1180.0xx-2<br>8V1320.0xx-2 | 8V1640.0xx-2<br>8V128M.0xx-2 |
|---|---|---|---|---|---|
| Mains input voltage | 3x 110 VAC to 230 VAC ±10%<br>or<br>1x 110 VAC to 230 VAC ±10% | 3x 400 VAC to 480 VAC ±10% | | | |

Table 170: Supply voltage range for ACOPOS servo drives

Corresponding matching transformers must be used for other mains voltages. In grounded power systems, autotransformers can also be used for this voltage adjustment; the star point does not have to be connected in this case.

## Warning!

**The apparent power from the transformer (intermediate transformer, autotransformer) must be at least 25% of the continuous power from the ACOPOS drives being used. Otherwise, parasitic leakage inductances can cause excessive heating of the transformer. In extreme cases, this can cause critical damage to the transformer!**

### 1.1.3 Protective ground connection (PE)

The following information concerning the protective ground connection corresponds to EN 61800-5-1, Item 4.2.5.4 "Connection elements for the protective ground conductor" and must be observed.

#### Wire cross section

The wire cross section of the protective ground conductor is oriented to the outer wires and must be selected according to the following table:

| Wire cross section for outer wire A [mm²] | Minimum wire cross section for the protective ground connection $A_{PE}$ [mm²] 1) |
|---|---|
| A ≤ 16 | $A_{PE} = A$ |
| 16 < A ≤ 35 | $A_{PE} = 16$ |
| 35 < A | $A_{PE} = A / 2$ |

Table 171: Selecting the cross section of the protective ground conductor

1) Any protective ground conductor that is not part of a cable must have a minimum wire cross section of 4 mm².

#### Increased discharge current

## Warning!



**ACOPOS servo drives are devices with increased leakage current (greater than 3.5 mA AC or 10 mA DC). A fixed (immobile) protective ground connection is therefore required on the servo drive.**

The following conditions must be fulfilled depending on the ACOPOS device being used:

| ACOPOS | Condition | Figure |
|---|---|---|
| 1010<br>1016 | In addition to the connection of the first protective ground conductor on terminal X3/PE, a second protective ground conductor with the same cross section must be connected on the designated terminal (M5 threaded bolt). | 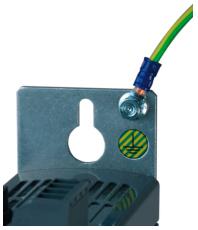 |
| 1022<br>1045<br>1090 | In addition to the connection of the first protective ground conductor on terminal X3/PE, a second protective ground conductor with the same cross section must be connected on the designated terminal (M5 threaded bolt). |  |
| 1180<br>1320 | In addition to the connection of the first protective ground conductor on terminal X3/PE, a second protective ground conductor with the same cross section must be connected on the designated terminal (M5 threaded bolt). | 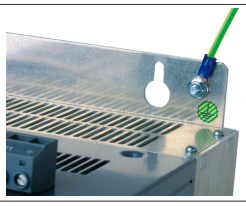 |
| 1640<br>128 M | The cross section of the protective ground conductor connected to terminal X3 / PE must be at least 10mm² Cu. | |

Table 172: Protective ground conditions depending on the ACOPOS device

## Warning!

**This product can cause direct current in the protective ground conductor.**

## Danger!

**Where a residual current protective device (RCD) is used for protection in case of direct or indirect contact, only a type B RCD (AC/DC-sensitive per IEC 60755) is permitted for the mains connection of the ACOPOS servo drives.**

**Otherwise, another protective measure must be used, such as neutralization or disconnection from the mains power supply by means of an isolation transformer.**





Provided by Industrial Automation Co. • www.industrialautomationco.com • Parts & Repair: 877-727-8757

## 1.2 Dimensioning

In general, dimensioning the mains power input, fuse protection and (if necessary) line contactor depends on the structure of the mains connection.

ACOPOS servo drives can be connected individually (each drive has its own fuse and, if necessary, its own line contactor) or in groups.

### 1.2.1 Individual ACOPOS power mains connections

The structure of an individual power mains connection with line contactor and circuit breaker can be seen in the following diagram:

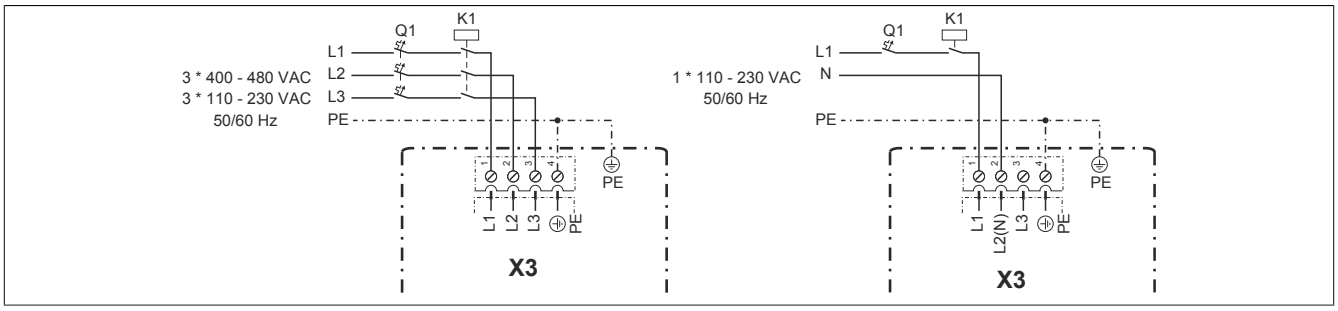


Figure 74: ACOPOS X3, individual power mains connection - Circuit diagram

**Dimensioning the power mains and overcurrent protection**

> **Information:**
>
> **When choosing a suitable fuse, the user must also account for characteristics such as aging effects, temperature derating, overcurrent capacity and the definition of the rated current, which can vary by manufacturer and type. In addition, the fuse that is selected must also be able to handle application-specific characteristics (e.g. overcurrent that occurs in acceleration cycles).**

The cross section of the power mains and the rated current for overcurrent protection $I_B$ should be determined based on the average current load $I_{Mains}$ to be expected.

The average current load $I_{Mains}$ to be expected can be calculated as follows:

| 3 * 400 - 480 VAC / 3 * 110 - 230 VAC | 1 * 110 - 230 VAC |
|---|---|
| $I_{Mains}[A] = \frac{S[VA]}{\sqrt{3}.U_{Mains}[V]}$ | $I_{Mains}[A] = \frac{S[VA]}{U_{Mains}[V]}$ |

Table 173: Information about selecting the fuse

The apparent power S can be estimated as follows: [5)]

$$S[VA] = M_{eff}[Nm].k.\frac{2.\pi.n_{Avg}[min^{-1}]}{60}$$

5) If information concerning load torque, inertia and friction are available, the effective torque or the effective power is calculated according to the following formulas:

$$M_{eff}[Nm] = \sqrt{\frac{1}{T_{Cycle}[s]} \cdot \sum_{1} M_i[Nm]^2.t_i[s]}$$

To calculate $n_{avg}$, information concerning the positioning cycle must be available.
$n_{avg}$ can be calculated using the following formulas:

$$n_{Avg}[min^{-1}] = \frac{1}{T_{Cycle}[s]} \cdot \sum_{i} n_i[min^{-1}].t_i[s]$$

If the values $n_{avg}$ become very low, this can cause imprecise results in some situations. In this case, you should contact B&R regarding the use of different calculation formulas or methods.

The following estimate is valid for linear motors: [6)]

$S[VA] = F_{eff}[N].k.v_{Avg}[m/s]$

The constant k is dependent on the ACOPOS servo drives used and can be taken from the following table:

| Name | ACOPOS | | | | | | | | |
|---|---|---|---|---|---|---|---|---|---|
| | 1010 | 1016 | 1022 | 1045 | 1090 | 1180 | 1320 | 1640 | 128 M |
| Constant k | 3 | | 2.8 | 2.4 | | 2.1 | 1.9 | 1.7 | 1.5 |

Table 174: Constant k

The rated current of the fuse $I_B$ is selected so that it's greater than/equal to the average current load $I_{Mains}$ to be expected.

$I_B \geq I_{Mains}$

The cable cross section of the mains power input must be selected so that the permissible current-carrying capacity of cable cross section $I_Z$ is greater than or equal to the selected rated current of fuse protection $I_B$ (see Tab. 175 "Current-carrying capacity of PVC insulated three-phase cables or individual wires " on page 225).

$I_Z \geq I_B$

The following table shows the current-carrying capacity of PVC-insulated three-phase cables (or three current-carrying individual wires) per IEC 60204-1 at an ambient temperature of 40°C [7)] and 70°C maximum wire temperature (current-carrying capacity for installation type F and cross sections greater than 35 mm² for installation types B1 and B2 were taken from DIN VDE 0298-4).

| Wire cross section [mm²] | Current-carrying capacity of cable cross section $I_Z$ / Rated current of fuse $I_B$ [A] depending on the installation type | | | | |
|---|---|---|---|---|---|
| | Three individual wires in conduit or cable duct | Three-phase cable in conduit or cable duct | Three-phase cable on walls | Three-phase cable in a cable tray | Three individual wires in a cable tray |
| | B1 | B2 | C | E | F |
| 1.5 | 13.5 / 13 | 13.1 / 10 | 15.2 / 13 | 16.1 / 16 | --- |
| 2.5 | 18.3 / 16 | 17.4 /16 | 21 / 20 | 22 / 20 | --- |
| 4 | 25 / 25 | 23 / 20 | 28 / 25 | 30 / 25 | --- |
| 6 | 32 / 32 | 30 / 25 | 36 / 32 | 37 / 32 | --- |
| 10 | 44 / 32 | 40 / 32 | 50 / 50 | 52 / 50 | --- |
| 16 | 60 / 50 | 54 / 50 | 66 / 63 | 70 / 63 | --- |
| 25 | 77 / 63 | 70 / 63 | 84 / 80 | 88 / 80 | 96 / 80 |
| 35 | 96 / 80 | 86 / 80 | 104 / 100 | 110 / 100 | 119 / 100 |
| 50 | 117 / 100 | 103 / 100 | 125 / 100 | 133 / 100 | 145 / 125 |
| 70 | 149 / 125 | 130 / 125 | 160 / 125 | 171 / 125 | 188 / 160 |
| 95 | 180 / 160 | 156 / 125 | 194 / 160 | 207 / 160 | 230 / 200 |

Table 175: Current-carrying capacity of PVC insulated three-phase cables or individual wires

When determining the cross section for the power mains, make sure that the cross section selected is within the range that can be used with the X3 power mains terminal (see "Overview of clampable cross sections" on page 266).

Overcurrent protection in the form of a circuit breaker or a fuse is required. Circuit breakers (time lag) with type C tripping characteristics (in accordance with IEC 60898) or fuses (time lag) with type gG tripping characteristics (in accordance with IEC 60269-1) must be used. [8)]



6) If information concerning load torque, inertia and friction are available, the effective torque or the effective power is calculated according to the following formulas:

$$F_{eff}[N] = \sqrt{\frac{1}{T_{Cycle}[s]} \cdot \sum_{1} F_i[N]^2.t_i[s]}$$

To calculate $v_{avg}$, information concerning the positioning cycle must be available.
$v_{avg}$ can be calculated using the following formulas:

$$v_{Avg}[m/s] = \frac{1}{T_{Cycle}[s]} \cdot \sum_{i} v_i[m/s].t_i[s]$$

If the values $v_{avg}$ become very low, this can cause imprecise results in some situations. In this case, you should contact B&R regarding the use of different calculation formulas or methods.

7) Current-carrying capacity is specified in IEC 60204-1 for an ambient temperature of 40°C; this reference temperature is 30°C in DIN VDE 0298-4. The values specified from DIN VDE 0298-4 listed in table "Current-carrying capacity of PVC-insulated three-phase cables or single conductors" are likewise converted for an ambient temperature of 40°C using the factor $k_{Temp}$ = 0.87 specified in the standard.
The specified current-carrying capacity does not take into account a reduction factor for groups of cables and single conductors. If necessary, this must be taken from the corresponding standards and included in the calculation.

8) Circuit breakers are available on the market with rated currents from 6 A to 63 A. Outside of this range, fuses must be used.

**North America:**

Only cables with copper wire can be used for cabling. These attachment cables must be able to withstand ambient temperatures up to 75°C.

Class J fuses according to UL Standard 248-8 can be used (for example fuses of type AJTxx from Ferraz Shawmut (www.ferrazshawmut.com) or type LPJ-xxSP from Bussmann (www.bussmann.com), where xx represents the nominal current of the respective fuse).

As an alternative, class CC fuses according to UL Standard 248-4 can be used (for example fuses of type LP-CC-xx from Bussmann (www.bussmann.com), where xx is the rated current of the respective fuse; fuses of type LP-CC-xx are available up to a nominal current of 30 A).

The fuse must have the following tripping characteristics:

| Minimum tripping time [s] | Rated current for the fuse at an average expected current load of | | | |
|---|---|---|---|---|
| | 12 ... 35 A | 50 ... 80 A | 100 ... 125 A | 160 A |
| 0.2 | Approx. 5.1 * $I_B$ | Approx. 4.5 * $I_B$ | Approx. 3.6 * $I_B$ | Approx. 4.0 * $I_B$ |
| 4 | Approx. 3.7 * $I_B$ | Approx. 3.3 * $I_B$ | Approx. 2.8 * $I_B$ | Approx. 3.2 * $I_B$ |
| 10 | Approx. 2.9 * $I_B$ | Approx. 2.5 * $I_B$ | Approx. 2.0 * $I_B$ | Approx. 2.3 * $I_B$ |
| 240 | Approx. 1.7 * $I_B$ | Approx. 1.7 * $I_B$ | Approx. 1.6 * $I_B$ | Approx. 1.8 * $I_B$ |

Table 176: Tripping characteristics of the fuse for the power mains connection

**Dimensioning the line contactor**

The rated current of the line contactor is oriented to the overcurrent protection for the mains connection. The line contactor is set up so that nominal operating current specified by the manufacturer of the line contactor for category AC-1 per EN 60947-4-1 is approximately 1.3 times the rated current of the overcurrent protection.

## Warning!

**ACOPOS servo drive DC bus circuits that are connected separately to the power mains via line connectors must not be interconnected!**

**Connecting a line choke and a line contactor before each individual servo drive in a group is not permitted. If, in this case, the DC bus circuits of the individual servo drives are interconnected, the rectifiers in the servo drives can be overloaded and possibly destroyed.**



Provided by Industrial Automation Co. • www.industrialautomationco.com • Parts & Repair: 877-727-8757

### 1.2.2 Implementing ACOPOS power mains connections for drive groups

The structure of the power mains connection for a drive group with line contactor and circuit breaker can be seen in the following diagram:

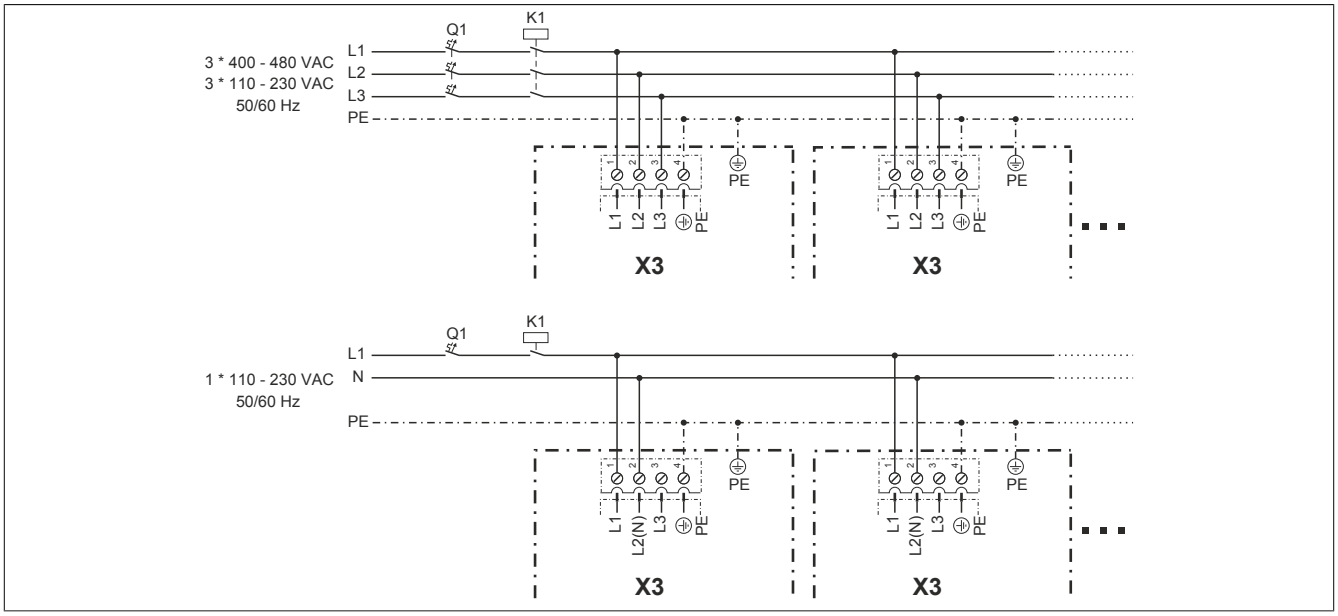


Figure 75: ACOPOS X3, power mains connection for a drive group - Circuit diagram



#### Using a mains choke

The optional use of a mains choke for drive groups can reduce the total harmonic distortion (THD) and the effective value for the mains current while increasing the total power factor (TPF). The nominal current for the line choke must be equal to the nominal current of the fuse that is protecting the drive group. In this way, the line choke is protected against overload by the fuse.

A line choke connection diagram is shown in the following image:

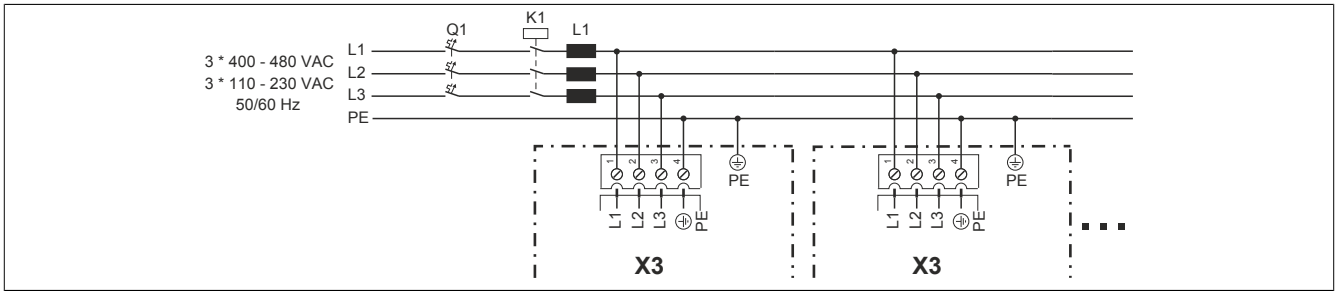


Figure 76: ACOPOS X3, power mains connection for a drive group with optional line choke - Circuit diagram

## Warning!

**For multi-axis configurations, only one line choke and one line contactor are permitted to be connected before the entire ACOPOS servo drive group (see "ACOPOS X3, power mains connection for a drive group with optional line choke - Circuit diagram" on page 227)!**

| Model number | Short description |
|---|---|
| 8I0CT004.000-1 | ACPi line choke 3-phase 4 A |
| 8I0CT010.000-1 | ACPi line choke 3-phase 10 A |
| 8I0CT016.000-1 | ACPi line choke 3-phase 16 A |
| 8I0CT030.000-1 | ACPi line choke 3-phase 30 A |
| 8I0CT060.000-1 | ACPi line choke 3-phase 60 A |
| 8I0CT100.000-1 | ACPi line choke 3-phase 100 A |
| 8I0CT184.000-1 | ACPi line choke 3-phase 184 A |
| 8I0CT222.000-1 | ACPi line choke 3-phase 222 A |
| 8I0CT230.000-1 | ACPi line choke 3-phase 230 A |

Table 177: Model numbers for the line chokes available from B&R

### Dimensioning the power mains and fuse

> **Information:**
>
> **When choosing a suitable fuse, the user must also account for properties such as aging effects, temperature derating, overcurrent capacity and the definition of the rated current, which can vary by manufacturer and type. In addition, the fuse that is selected must also be able to handle application-specific characteristics (e.g. overcurrent that occurs in acceleration cycles).**

The cross section of the distribution point and all power mains connections are chosen according to "Current-carrying capacity of PVC insulated three-phase cables or individual wires " on page 225 so that the maximum current load for the cable cross section selected [9] is greater than or equal to the sum of the calculated mains current.

$I_Z \geq \sum I_{mains}$

The rated current of the overcurrent protection must be less than or equal to the maximum current load for the cable cross section selected (see Tab. 175 "Current-carrying capacity of PVC insulated three-phase cables or individual wires " on page 225).

$I_B \leq I_Z$

### Dimensioning the line contactor

The rated current of a common line contactor is oriented to the overcurrent protection for the power mains connection. The line contactor is set up so that nominal operating current specified by the manufacturer of the line contactor for category AC-1 is approximately 1.3 times the rated current of the overcurrent protection.

[9] When determining a common cross section for several drives (especially with different sized ACOPOS modules), make sure that the cross section selected is within the range that can be used with the power mains terminals (see "Overview of clampable cross sections" on page 266).



Provided by Industrial Automation Co. • www.industrialautomationco.com • Parts & Repair: 877-727-8757

## 1.3 Fault current protection

Fault current protection (RCD - residual current-operated protective device) can be used with ACOPOS servo drives. The following points must be noted, however:

ACOPOS servo drives have a power rectifier. In the event of a short circuit to an exposed conductive part, a smooth residual direct current can occur that prevents tripping of an AC or pulse current sensitive RCD (type A or AC) and thus cancels the protective function for all consumers connected to it.

### Danger!

**If used for protection during direct or indirect contact of the fault current protection (RCD), only a Type B RCD (AC-DC sensitive, in accordance with IEC 60755) can be used for the ACOPOS power mains connection. Otherwise, additional protective measures must be used, such as neutralization or isolation from the power mains using an isolation transformer.**

### 1.3.1 Rated fault current

On ACOPOS servo drives, fault current protection with a rated fault current[10)] of ≥100 mA can be used. However, errors can occur:

- When connecting servo drives to the power mains (short-term single-phase or two-phase operation because of contact chatter on the line contactor).
- Because of high frequency discharge currents occurring during operation when using long motor cables.
- Because of an extreme unbalance factor for the three-phase system.

### 1.3.2 Estimating the discharge current

Depending on the connection of the ACOPOS servo drive, different discharge currents flow to ground on the protective ground conductor (PE):

Single-phase or two-phase operation (as intermediate state when switching on the line contactor):

$$I_A[A] = \frac{U_{mains}[V].2.\pi.f_{mains}[Hz].C_A[F]}{\sqrt{3}}$$

Single-phase operation with neutral line:

$$I_A[A] = \frac{U_{mains}[V].2.\pi.f_{mains}[Hz].C_A[F]}{2.\sqrt{3}}$$

The discharge capacitance $C_A$ of the various ACOPOS servo drives can be taken from the following table:

| Name | ACOPOS | | | | | | | | |
|---|---|---|---|---|---|---|---|---|---|
| | 1010.0xx-2<br>1016.0xx-2 | 1010.5xx-2<br>1016.5xx-2 | 1022.0xx-2 | 1045.0xx-2 | 1090.0xx-2 | 1180.0xx-2 | 1320.0xx-2 | 1640.0xx-2 | 128M.0xx-2 |
| Discharge capacitance $C_A$ | 550 nF | 330 nF | 660 nF | | | 3.1 µF | | 5.4 µF | |

Table 178: Discharge capacitance $C_A$

### 1.3.3 Manufacturer used

For example, the AC-DC sensitive, 4-pole fault current protective device F 804 from ABB (fault current: 300 mA; nominal current: 63 A) can be used. Using this fault current protective device, approximately 5 ACOPOS 1022 (or 1045, 1090) can be connected in parallel.

10) The rated fault current listed by the manufacturer are maximum values that will definitely trip the protective device. Normally, the protective device is tripped at approximately 60% of the rated fault current.

# 2 DC bus

## 2.1 General information

With ACOPOS servo drives, it is possible to connect several servo drives via the DC bus. This connection allows compensation of braking and drive energy of several axes or the distribution of braking energy to several braking resistors.

The connection is made using terminals X2 / +DC and -DC. The structure of the DC bus connections can be seen in the following diagram:

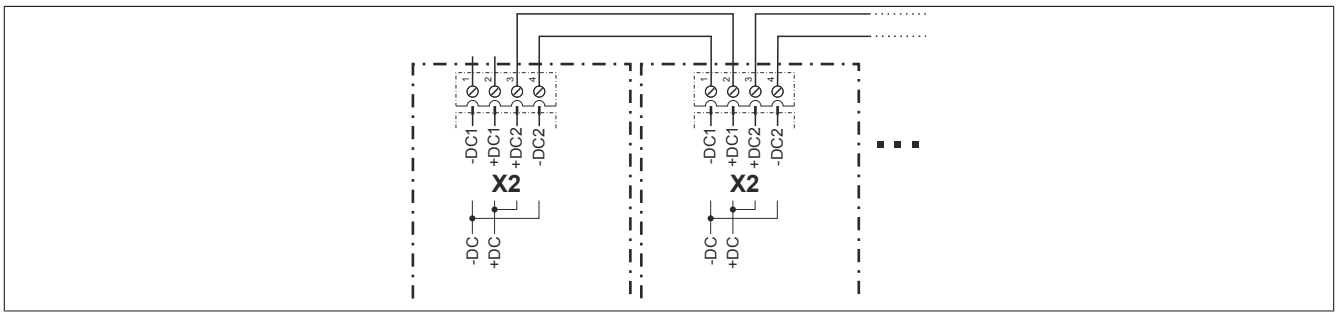


Figure 77: ACOPOS X2 DC bus connections - Circuit diagram

### Caution!

**To prevent excessively high discharge currents from flowing over the individual servo drives, make sure that smaller servo drives are not connected between two larger servo drives.**

### Warning!

**For multi-axis configurations, only one line choke and one line contactor are permitted to be connected before the entire ACOPOS servo drive group (see "ACOPOS X3, power mains connection for a drive group with optional line choke - Circuit diagram" on page 227)!**

### Warning!

**Only DC bus circuits of ACOPOS servo drives with the same supply voltage range are permitted to be connected in a group ("Supply voltage range for ACOPOS servo drives" on page 222).**

**Therefore, the DC bus circuits of ACOPOS servo drives 8Vxxxx.5xx-2 and 8Vxxxx.0xx-2 are not allowed to be linked! For this reason, the X2 plugs for ACOPOS servo drives 8Vxxxx.5xx-2 and 8Vxxxx.0xx-2 are keyed differently.**

**All ACOPOS servo drives 8Vxxxx.5xx-2 with a single-phase supply that should have their DC buses connected together must be connected to the same phase! If this is not done, the DC bus voltage increases to a level that is not permitted, causing the devices to be destroyed!**

## 2.2 Wiring design

The DC bus connections on the ACOPOS servo drives do **not** have short circuit and ground fault protection and are not protected against reverse polarity. It is therefore very important that the DC bus connections be wired correctly.

### Caution!

**DC bus connections must be wired correctly (no short circuits, ground faults or reverse polarity).**

A suitable measure to ensure that the wiring is secure against short circuits and ground faults[11] is the use of appropriate electrical lines. Special rubber-insulated wires with increased resistance to heat (90°C) of types

- NSGAÖU
- NSGAFÖU
- NSGAFCMÖU

with a nominal voltage $U_0/U$ of at least 1.7/3 kV are considered to be secure against short circuits and ground faults in switchgear and distribution systems up to 1000 V[12] .

## 2.3 Equal distribution of the applied power via the power rectifiers

When creating a DC bus connection between several servo drives, it is possible that the parallel connection of the power rectifiers causes incorrect distribution of the applied power.

### Warning!

**Distribution of the supplied power that is not permitted can occur both during operation and when booting the ACOPOS servo drives!**

To prevent this undesired effect, appropriately dimensioned balancing resistors are integrated in the ACOPOS servo drives.

The following rules must be observed so that the effect of these balancing resistors is not canceled out:

- The length of the DC bus wiring is not allowed to exceed a total length of 3 m and must be within a single control cabinet.
- Dimensioning the cross section of the ACOPOS servo drive power mains must be done according to section "Dimensioning the power mains and overcurrent protection " on page 224.
- The cross section of the DC bus wiring[13] on the respective ACOPOS servo drive must be less than or equal to the cross section of the mains power input of the servo drive.
- The selected cross section must be within the clampable cross section range for the DC bus connection terminal X2 (see "Overview of clampable cross sections" on page 266).
- For multi-axis configurations, only one line choke may be connected before the entire ACOPOS servo drive group.



[11] Wiring design e.g. according to DIN VDE 0100, Part 200 "Electrical systems for buildings - terms", Item A.7.6.

[12] See e.g. DIN VDE 0298, Part 3 "Use of cables and insulated wires for high-voltage systems", Item 9.2.8.

[13] The cross section of the individual segments of the DC bus wiring must be dimensioned for the thermal equivalent RMS value of the respective compensation current. If information about the compensating current flow is available, the thermal equivalent RMS value for the compensating current can be calculated as follows:

$$I_q[A] = \sqrt{\frac{1}{T_{Cycle}[s]} \cdot \sum_i I_i[A]^2 . t_i[s]}$$

The cross section of the DC bus wiring must then be selected according to "Overview of clampable cross sections" on page 266 so that the permissible current-carrying capacity of the cable cross section is greater than or equal to the thermal equivalent RMS value of the compensating current ($I_Z \geq I_q$).

## 2.4 Equal distribution of the brake power on the braking resistors

The braking resistors integrated in ACOPOS servo drives as well as braking resistors that can be connected externally are controlled using a specially developed procedure. This guarantees that the brake power is optimally and equally distributed on the braking resistors when a DC bus connection is made between several units.

When using integrated braking resistors, additional configuration is not required.
When using external braking resistors, the corresponding parameters must be defined (see "Configuring brake resistor parameters" on page 247).

## 2.5 Connecting external DC bus power supplies

ACOPOS servo drives detect a power failure and can immediately initiate active braking of the motor. The braking energy generated is returned to the DC bus and can be used for 24 VDC power supply via DC bus power supplies. This makes it possible to supply the ACOPOS servo drive as well as encoders, sensors and a safety circuit with 24 VDC during the braking process. [14)]

For ACOPOS servo drives 8V1010 to 8V1090, an external DC bus power supply must be used. For ACOPOS servo drives 8V1180 to 8V128M, a DC bus power supply is integrated. [15)]

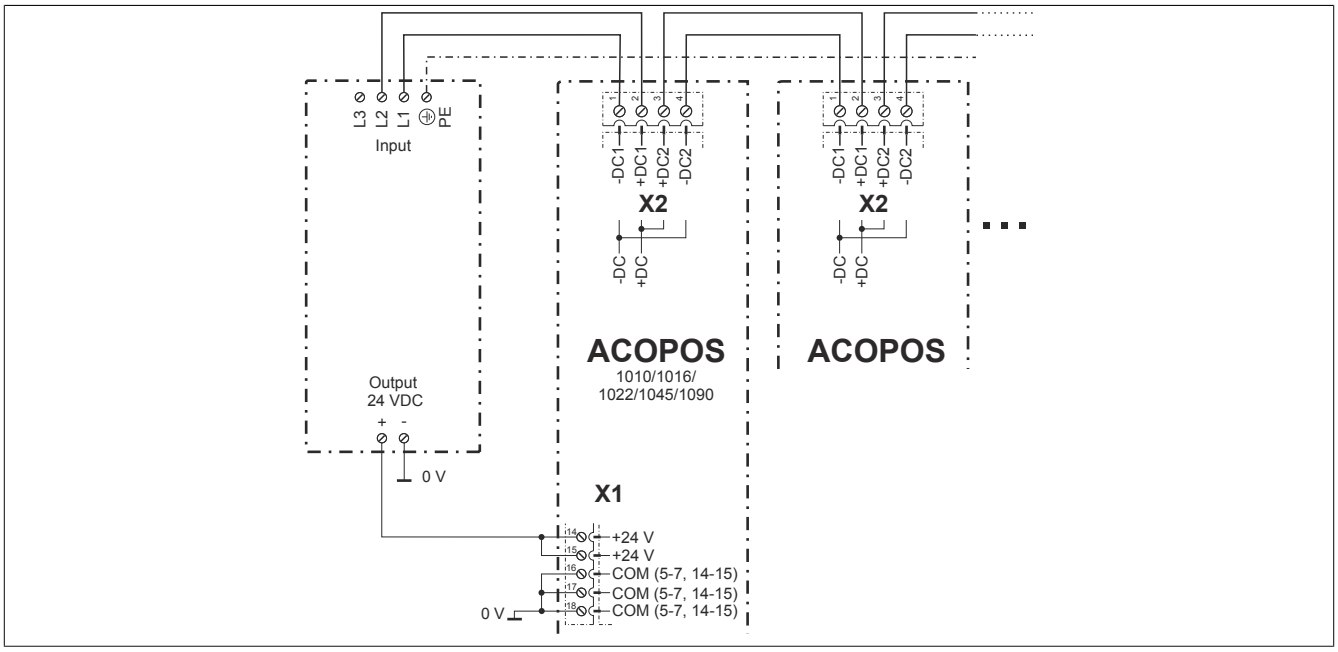


Figure 78: DC bus power supply for ACOPOS servo drives

[14)] IMPORTANT: There are use cases where the braking energy is insufficient to maintain a 24 VDC power supply until standstill.
[15)] The SL20.310 from PULS is a DC bus power supply that can be used (www.pulspower.com).

# 3 Motor connection

On B&R motors, the power connections, connections for the holding brake and connections for the motor temperature sensor are all made using the same motor connector.[16)]
On the servo drive, the motor is connected via terminals X5x / U, V, W and PE as well as terminals X4b / B+, B-, T+ and T-. [17)] The motor connection must be shielded appropriately (see "EMC-compatible installation " on page 260).

The design of the motor connection can be seen in the following diagram:

| Structure with 8CH hybrid motor cable | Structure with motor and separate encoder cable |
|---|---|
| 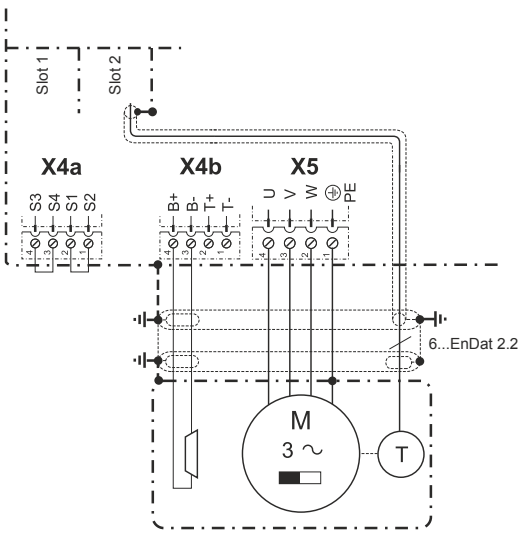 | 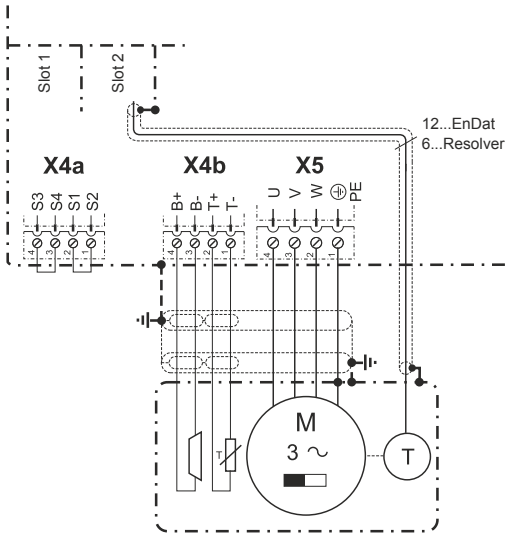 |



Table 179: Circuit diagram for ACOPOS motor connection

The cross section of the motor cable must be dimensioned for the thermal equivalent RMS value of the motor current.[18)]

The cross section of the motor cable is selected for B&R motor cables according to the following table so that the permissible current-carrying capacity of the selected cable cross section is greater than or equal to the thermal equivalent RMS value of the motor current:

$I_Z \geq I_q$

## Information:

**For application-specific reasons, it is recommended to select the wire cross section of motor cables in such a way that the thermal equivalent RMS value of the motor current does not exceed 90% of the permissible current-carrying capacity of the wire cross section.**

16) When using 8CHxxx hybrid motor cables, the encoder signals are also transmitted via the same motor connector.
17) A temperature sensor does not need to be connected when using 8CHxxx hybrid motor cables since the motor temperature is transferred digitally.
18) If information about load torques, inertias and friction is available, the thermal equivalent RMS value of the motor current for the motor being used can be calculated as follows:

$$I_q[A] = \sqrt{\frac{1}{T_{Cycle}[s]} \cdot \sum_i I_i[A]^2 \cdot t_i[s]}$$

### Motor cables - For use in cable drag chains

The following table shows the current-carrying capacity of specially insulated three-phase cables per DIN VDE 0298-4 at an ambient temperature of 40°C[19] and maximum cable temperature of 90°C:

| Wire cross section [mm²] | Current-carrying capacity of the wire $I_Z$ [A] depending on type of installation | | |
|---|---|---|---|
| | Installation in electrical installation pipes | Installation on a wall | Installation in the air |
| | B2 | C | E |
| 0.75 | 11.5 | 13 | 13.5 |
| 1.5 | 17.8 | 20 | 20.9 |
| 2.5 | 23.7 | 27.3 | 29.1 |
| 4 | 31.9 [1] | 36.4 [1] | 38.2 [1] |
| 6 | 40 | 47.3 | 49.1 |
| 10 | 54.6 | 64.6 | 68.3 |
| 16 | 72.8 | 87.4 | 91 |
| 25 | 95.6 | 108.3 | 115.6 |
| 35 | 116.5 | 133.8 | 143.8 |
| 50 | 140.1 | 162.9 | 174.7 |

Table 180: Current-carrying capacity of specially insulated three-phase cables

1) Pre-assembled 8BCMxxxxxx.1312A-0 motor cables from B&R are only permitted to be loaded with max. 30 A.

### Motor cables - Not for use in cable drag chains

The following table shows the current-carrying capacity of PVC-insulated three-phase cables per DIN VDE 0298-4 at an ambient temperature of 40°C[20] and maximum cable temperature of 70°C:

| Wire cross section [mm²] | Current-carrying capacity of the wire $I_Z$ [A] depending on type of installation | | |
|---|---|---|---|
| | Installation in electrical installation pipes | Installation on a wall | Installation in the air |
| | B2 | C | E |
| 0.75 | 8.5 | 9.8 | 10.4 |
| 1.5 | 13.1 | 15.2 | 16.1 |
| 2.5 | 17.4 | 20.9 | 21.8 |
| 4 | 23.5 | 27.9 | 29.6 |
| 6 | 29.6 | 35.7 | 37.4 |
| 10 | 40 | 51.7 | 52.2 |

Table 181: Current-carrying capacity of PVC-insulated three-phase cables

When determining the cross section for the motor cable, make sure that the cross section selected is within the range that can be used with motor connection terminal X5x see "Overview of clampable cross sections" on page 266.

## 3.1 Motor overload protection

$$\text{Level motor overload protection } [\%] = \frac{I_L}{I_N} * 100\% = \frac{1}{I_N} * 100\% * \sqrt{I_0^{\,2} \frac{T_{M_LIM} - T_{M_AMB}}{T_{M_LIM} - T_{M_AMB_N}} - \frac{n_{avg}}{n_N}\left(I_0^{\,2} - I_N^{\,2}\right)}$$

| | |
|---|---|
| $I_L$ | Motor overload protection current |
| $I_0$ | Stall current of the motor |
| $I_N$ | Nominal current of the motor |
| $T_{M_LIM}$ | Maximum permissible motor temperature |
| $T_{M_AMB}$ | Current ambient temperature of the motor |
| $T_{M_AMB_N}$ | Nominal ambient temperature of the motor |
| $n_{avg}$ | Average motor speed |
| $n_N$ | Nominal speed of the motor |

19) Current-carrying capacity is specified in DIN VDE 0298-4 for an ambient temperature of 30°C. The values listed in the "Current-carrying capacity of PVC-insulated three-phase cables or single conductors" table are converted for use at an ambient temperature of 40°C using the factor $k_{Temp}$ = 0.91 specified in the standard.
The specified current-carrying capacity does not take into account a reduction factor for groups of cables and single conductors. If necessary, this must be taken from the corresponding standards and included in the calculation.

20) Current-carrying capacity is specified in DIN VDE 0298-4 for an ambient temperature of 30°C. The values listed in the "Current-carrying capacity of PVC-insulated three-phase cables or single conductors" table are converted for use at an ambient temperature of 40°C using the factor $k_{Temp}$ = 0.91 specified in the standard.
The specified current-carrying capacity does not take into account a reduction factor for groups of cables and single conductors. This factor is available in the corresponding standards and must be included in the calculation if necessary.

# 4 Braking resistors

## 4.1 General information

When braking servo motors, power is returned to the ACOPOS servo drive. This causes the capacitors in the DC bus to be charged to higher voltages. Starting with a DC bus voltage of approx. 800 V, the ACOPOS servo drive links the braking resistor to the DC bus using the brake chopper and converts the braking energy to heat.

For ACOPOS servo drives, braking resistors are integrated for this purpose or external braking resistors can be connected. The different features can be looked up in the following table:

| Name | ACOPOS | | | | | | | | |
|---|---|---|---|---|---|---|---|---|---|
| | 1010 | 1016 | 1022 | 1045 | 1090 | 1180 | 1320 | 1640 | 128 M |
| Integrated brake chopper | Yes | | | | | | | | |
| Internal braking resistor | Yes | | Yes | Yes | | Yes | | Yes [3] | Yes [3] |
| Continuous power | 130 W | | 130 W | 200 W | | 400 W | | 200 W | 240 W |
| Maximum power | 2 kW [1]<br>1.9 kW [2] | | 3.5 kW | 7 kW | | 14 kW | | 7 kW | 8.5 kW |
| Connection of external braking resistor possible [4] | No [6] | | | | | Yes | | Yes | |
| Continuous power ($P_{BRmax}$) | --- | | | | | --- [7] | | --- [7] | |
| Maximum power ($P_{BRmax}$) | --- | | | | | 40 kW | | 250 kW | |
| Minimum braking resistance ($R_{minServo}$) | --- | | | | | 15 Ω | | 2.5 Ω | |
| Rated current for the built-in fuse ($I_{BRServo}$) [5] | --- | | | | | 12 A (fast-acting) | | 30 A (fast-acting) | |

Table 182: Braking resistors for ACOPOS servo drives

1) For 8V1010.0xx-2 and 8V1016.0xx-2.
2) For 8V1010.5xx-2 and 8V1016.5xx-2.
3) The braking resistors integrated in the ACOPOS servo drives 1640 and 128M are dimensioned in such a way that they can be used for braking until a standstill (in a typical drive situation).
4) ACOPOS servo drives are designed so that either the integrated braking resistor **or** the external braking resistor can be enabled. Braking with both braking resistors at the same time is not possible.
   Switchover takes place using the software and is only possible during the ACOPOS servo drive's initialization phase:

   ParID 398: Switchover of internal / external braking resistor

   0 ... Internal (default)
   1 ... External
5) The fuses used must be fast-acting fuses ∅10x38 mm for 600 VAC/VDC. For example, type KLKD0xx (xx is the rated current of the fuse in amperes e.g. KLKD030) from Littelfuse (www.littelfuse.com) can be used.
6) The braking resistors integrated in ACOPOS servo drives 1010, 1016, 1022, 1045 and 1090 are optimally and sufficiently dimensioned for the respective size.
7) Application-dependent, see 4.3.1 "Basis of the calculation" on page 237.

## 4.2 External braking resistor connections

External braking resistors are connected using the X6 / RB+, RB- and PE terminals. The structure of the external braking resistor connection can be seen in the following diagram:

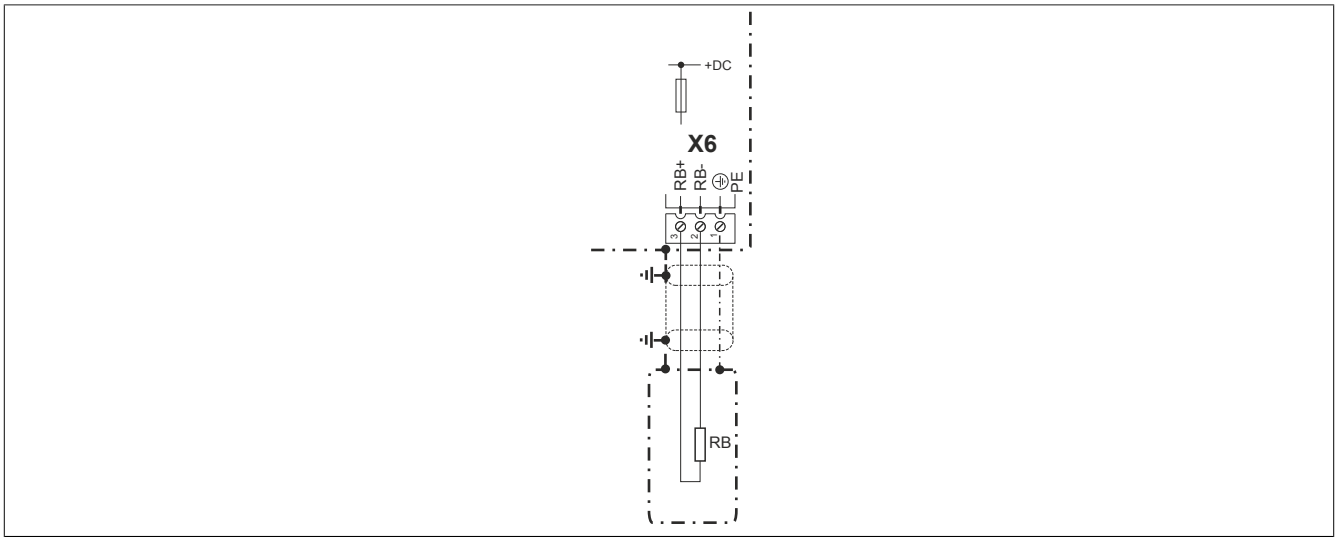


Figure 79: ACOPOS X6, external braking resistor on ACOPOS 1180/1320/1640/128M - Circuit diagram

When determining the cross section [21] for wiring external braking resistors, it is important to ensure that the selected cross section is within the range that can be connected to the X6 braking resistor connection terminals (see "Overview of clampable cross sections" on page 266).

### 4.2.1 Fuse protection

To protect the external braking resistor connection, a fuse is built into the bottom of ACOPOS servo drives. [22]

| ACOPOS 1180, 1320 | ACOPOS 1640, 128M |
|---|---|
| 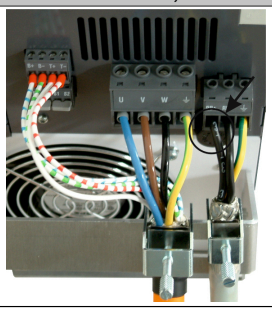 | 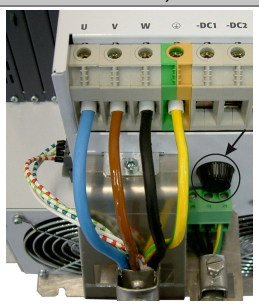 |

Table 183: The location where the fuse for the external braking resistor connection is installed

The relevant data for the fuses that are to be used can be found on the sticker close to the fuse holder.

[21] The cross section of the braking resistor wiring must be dimensioned for the thermal equivalent RMS value of the respective braking current. If information about the braking current curve is available, the thermal equivalent RMS value of the braking current can be calculated as follows:

$$I_q[A] = \sqrt{\frac{1}{T_{Cycle}[s]} \cdot \sum_i I_i[A]^2 . t_i[s]}$$

The cross section of the braking resistor wiring must then be selected according to table "Current-carrying capacity of PVC insulated three-phase cables or individual wires " on page 225 so that the permissible current-carrying capacity of the cable cross section is greater than or equal to the thermal equivalent RMS value of the braking current ($I_Z \geq I_q$).

[22] External braking resistors can only be connected to ACOPOS 8V1180.0xx-2, 8V1320.0xx-2, 8V1640.0xx-2 and 8V128M.0xx-2 devices. The fuses used must be fast-acting fuses ∅10x38 mm for 600 VAC/VDC. For example, type KLKD0xx (xx is the rated current of the fuse in amperes e.g. KLKD030) from Littelfuse (www.littelfuse.com) can be used.

## 4.3 Dimensioning the braking resistor

### 4.3.1 Basis of the calculation

An external braking resistor can be dimensioned based on a movement and load profile (for each axis in the corresponding application):

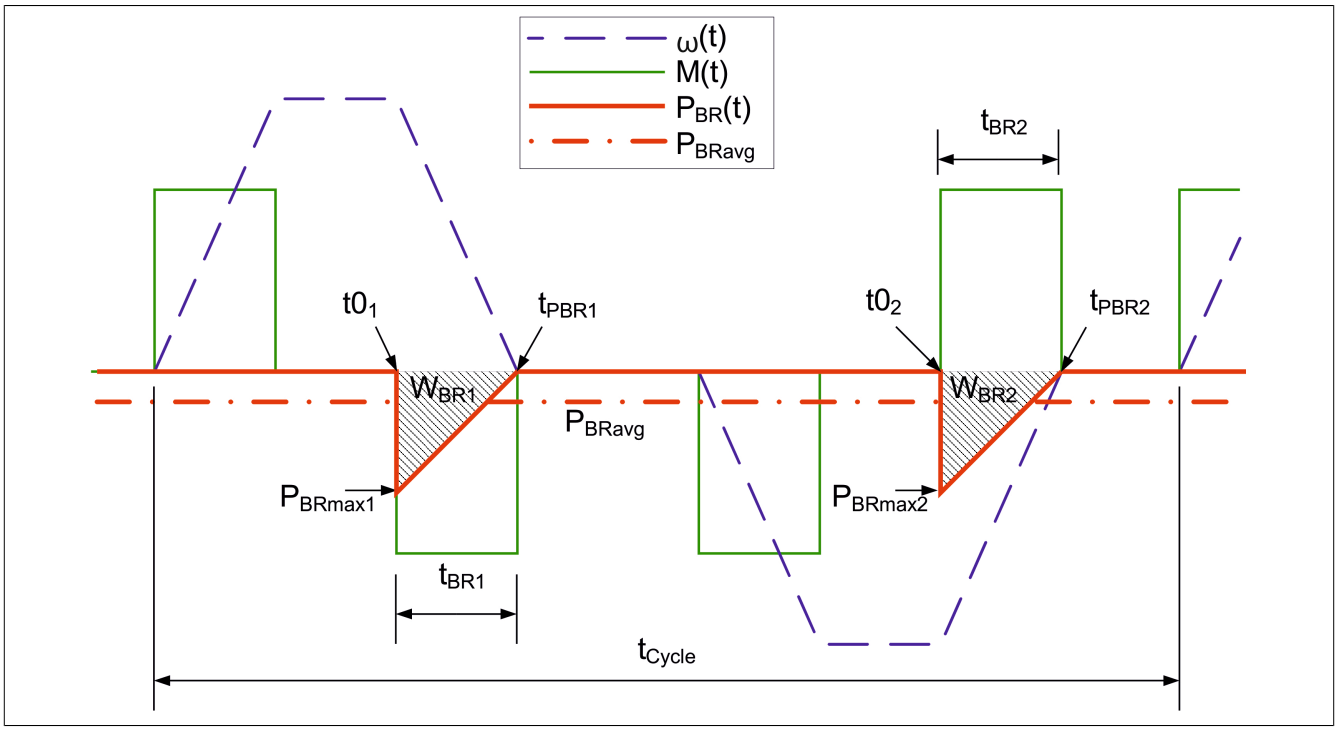


Figure 80: Movement and load profile for one axis in a sample application

| | |
|---|---|
| $\omega(t)$ | Angular velocity |
| $P_{BR}(t)$ | Brake power |
| $P_{BRavg}$ | Average brake power for one cycle |
| $M(t)$ | Torque |
| $t_{Cycle}$ | Cycle duration |
| $t0_1$ | Start time for braking procedure 1 |
| $t_{PBR1}$ | End time for braking procedure 1 |
| $P_{BRmax1}$ | Maximum brake power in braking procedure 1 |
| $W_{BR1}$ | Brake power for braking procedure 1 |
| $t_{BR1}$ | Duration of braking procedure 1 |
| $t0_2$ | Start time for braking procedure 2 |
| $t_{PBR2}$ | End time for braking procedure 2 |
| $P_{BRmax2}$ | Maximum brake power in braking procedure 2 |
| $W_{BR2}$ | Brake power for braking procedure 2 |
| $t_{BR2}$ | Duration of braking procedure 2 |

### Power calculation

$P(t) = M(t).\omega(t)$

All instances of P(t) <0 will be labeled as brake power ratings $P_{BR}(t)$.

### Braking energy per braking procedure (responsible for heating up the braking resistor during a braking procedure)

$$W_{BR_i} = \int_{t0_i}^{tP_{BR_i}} P_{BR_i}(t)dt$$

$P_{BR_i} < 0$

### Braking energy for one cycle (responsible for average heating of the braking resistor)

$$W_{BRges} = \sum_{N}^{i=1} W_{BR_i}$$

### Maximum braking energy within one cycle (determinant variable for selecting the braking resistor value)

$$W_{BRges} = \sum_{N}^{i=1} W_{BR_i}$$

### Average brake power for one cycle (determinant variable for the required continuous power of the braking resistor)

$$P_{BRavgAPPL} = \frac{W_{BRges}}{t_{Cycle}}$$

### Total braking time within one cycle (determinant variable for determining the duty cycle ratio)

$$t = \sum_{0}^{t_{Cycle}} t_{BRi}$$

### Determining braking resistor data

The following parameters must be determined for an external braking resistor according to the application:

- Resistor value ($R_{BR}$)
- Nominal continuous power ($P_{BRN}$)

Further parameters for external braking resistors can be taken from the manufacturer's data sheet:

- Thermal capacity ($c_{th}$)
- Thermal resistance ($R_{th}$)
- Maximum permissible overtemperature of the braking resistor ($\Delta T_{BRmax}$) or absorbed heat up to $\Delta T_{BRmax}$ ($Q_{BRmax}$)[23)]

### Data for B&R 8B0W braking resistors

| Model number | Mounting orientation | $R_{BR}$ [Ω] | $T_{BRmax}$ [°C] 1) 2) | $R_{th}$ [K/W] | $c_{th}$ [J/K] | $Q_{BRmax}$ [J] 1) 2) | $P_{BRN}$ [W] 1) 2) |
|---|---|---|---|---|---|---|---|
| 8B0W0045H000.00x-1 | Vertical | 50 ±10% | 723 | 1.517 | 30.88 | 21,091 | 424 |
| | Horizontal | 50 ±10% | 723 | 1.657 | 30.88 | 21,091 | 388 |
| 8B0W0079H000.00x-1 | Vertical | 33 ±10% | 677 | 0.852 | 40.68 | 25,913 | 701 |
| | Horizontal | 33 ±10% | 677 | 0.9395 | 40.68 | 25,913 | 636 |

Table 184: Overview of braking resistor data - 8B0W

1) $T_{BRmax}$ can be reduced by application-related limitations (contact protection, warming of neighboring components, maximum warming of the control cabinet, installation position, etc.). In this case, the values for $Q_{BRmax}$ and $P_{BRN}$ will also change; these must be recalculated for the maximum value of $T_{BRmax}$ permitted in the application!

2) Values for $T_{amb}$ = 40°C.

[23)] Values for ambient temperature $T_{amb}$ = 40°C.



Provided by Industrial Automation Co. • www.industrialautomationco.com • Parts & Repair: 877-727-8757

### Series and parallel connection of braking resistors

| Parameter | Serial connection | | Parallel connection | |
|---|---|---|---|---|
| Resistance value | $R_{ges} = \sum_{i=1}^{N} R_i$ | 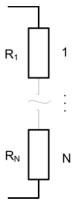 | $\frac{1}{R_{ges}} = \sum_{i=1}^{N} \frac{1}{R_i}$ | 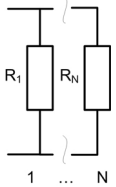 |
| Thermal resistance | $\frac{1}{R_{thges}} = \sum_{i=1}^{N} \frac{1}{R_{th_i}}$ | | $\frac{1}{R_{thges}} = \sum_{i=1}^{N} \frac{1}{R_{th_i}}$ | |
| Thermal capacity | $C_{th} = \sum_{i=1}^{N} C_{th_i}$ | | $C_{th} = \sum_{i=1}^{N} C_{th_i}$ | |
| Max. permissible temperature | $T_{max} = T_{max}$ | | $T_{max} = T_{max}$ | |
| Absorbed heat up to $T_{max}$ | $Q_{maxTot} = \sum_{i=1}^{N} Qmax_i$ | | $Q_{maxTot} = \sum_{i=1}^{N} Qmax_i$ | |





Table 185: Series and parallel connection of braking resistors

Maximum heat that can be absorbed by the braking resistor:

$$Q_{BRmax} = (T_{BRmax} - T_{amb}).c_{th}$$

Maximum temperature in continuous operation:

$$\Delta T_{Lenght} = P_{avg}.R_{th}$$

Average overtemperature in continuous operation:

$$\Delta T_{BR} = \frac{W_{BRges}}{C_{th}}$$

Thermal time constant of the braking resistor:

$$\tau = R_{th}.c_{th}$$





Provided by Industrial Automation Co. • www.industrialautomationco.com • Parts & Repair: 877-727-8757

### 4.3.2 Example

#### Scenario

An axis has the following movement and load profile:

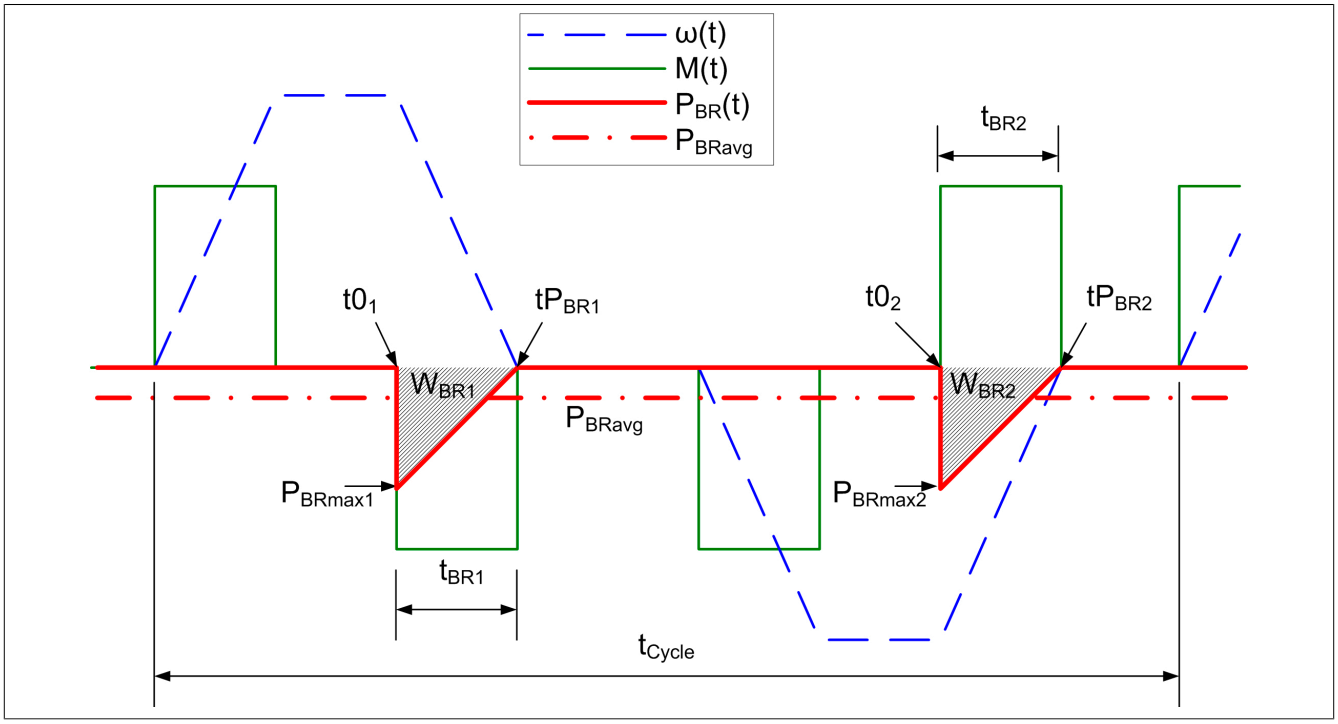


Figure 81: Movement and load profile of one axis example

**Value**
$P_{BRmax1} = P_{BRmax2} = 50$ kW
$t_{BR1} = t_{BR2} = 0.3$ s
$t_{Cycle} = 10$ s

- The ambient temperature is 40°C.
- There are no application-related limitations for the maximum surface temperature of the braking resistor.

#### Calculation

Step 1: Determine the maximum brake power within one cycle.

$P_{BRmaxAPPL} = P_{BRmax1} = P_{BRmax2} = 50kW$

Step 2: Determine the average brake power for one cycle.

$$W_{BRges} = \frac{P_{BRmax1}.t_{BR1}}{2} + \frac{P_{BRmax2}.t_{BR2}}{2} = \frac{50kW.0,3s}{2} + \frac{50kW.0,3s}{2} = 15kJ$$

$$P_{BRavgAPPL} = \frac{W_{BRges}}{t_{Cycle}} = \frac{15kJ}{10s} = 1,5kW$$

Step 3: Determine the right ACOPOS servo drive.

The following criteria must be met:

$P_{maxServo} \geq P_{BRmaxAPPL} \Rightarrow P_{maxServo} \geq 50kW$

$$I_{BRServo} \geq \frac{\sqrt{P_{BRavgAPPL}.P_{BRmaxAPPL}}}{U_{DC}} \Rightarrow I_{BRServo} \geq \frac{\sqrt{1500\ W.50000\ W}}{800\ V} \Rightarrow I_{BRServo} \geq 10.83A$$

ACOPOS servo drive 8V1640.00-2 meets the following criteria (see Tab. 182 "Braking resistors for ACOPOS servo drives" on page 235):

- $P_{maxServo} = 250$ kW ≥ 50 kW
- $I_{BRServo} = 30$ A ≥ 10.83 A

*Can the selected ACOPOS servo drive conduct the peak power for the required braking duration for each individual braking procedure within the cycle?*

This can be checked using the following diagrams:

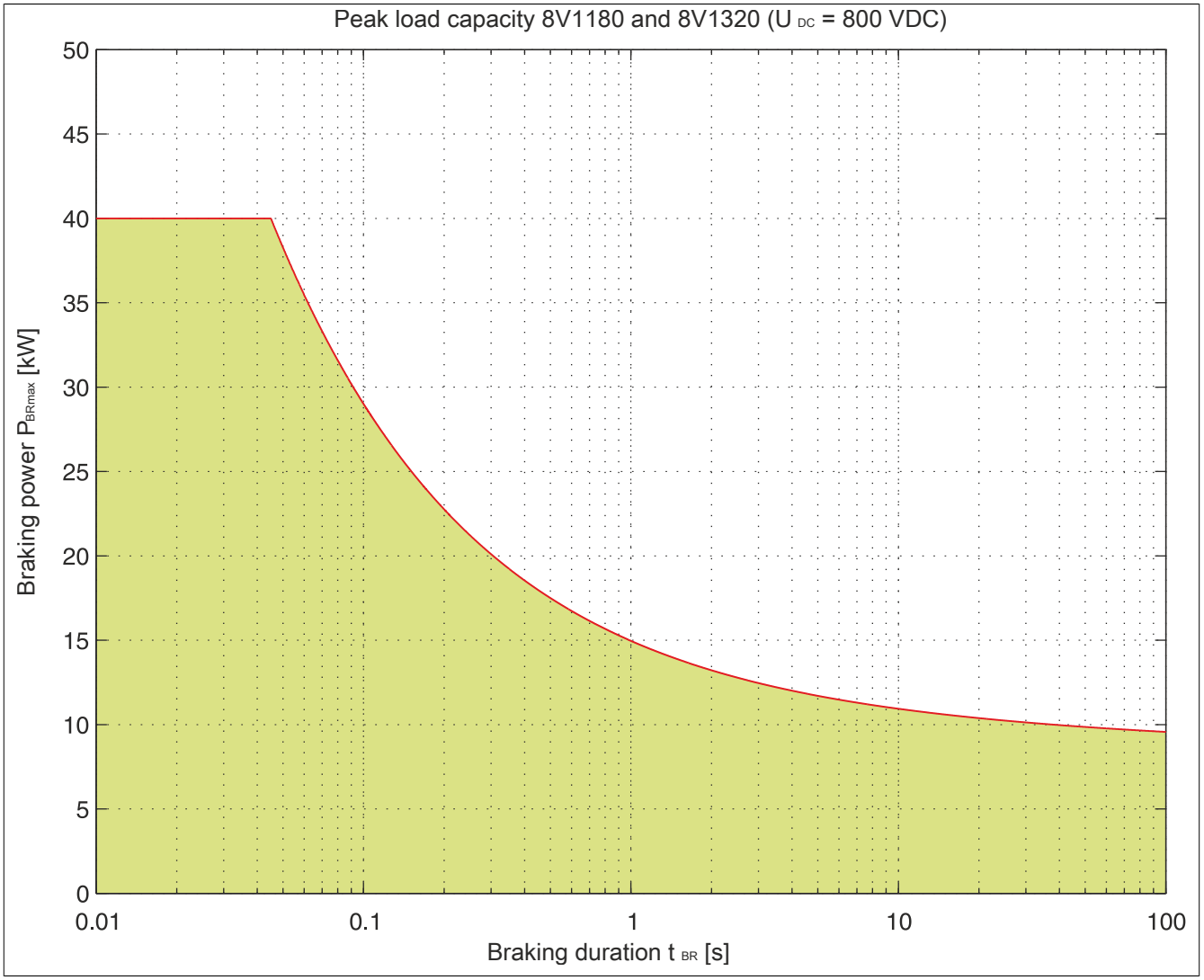


Figure 82: Peak load capacity - 8V1180 / 8V1320





Provided by Industrial Automation Co. • www.industrialautomationco.com • Parts & Repair: 877-727-8757

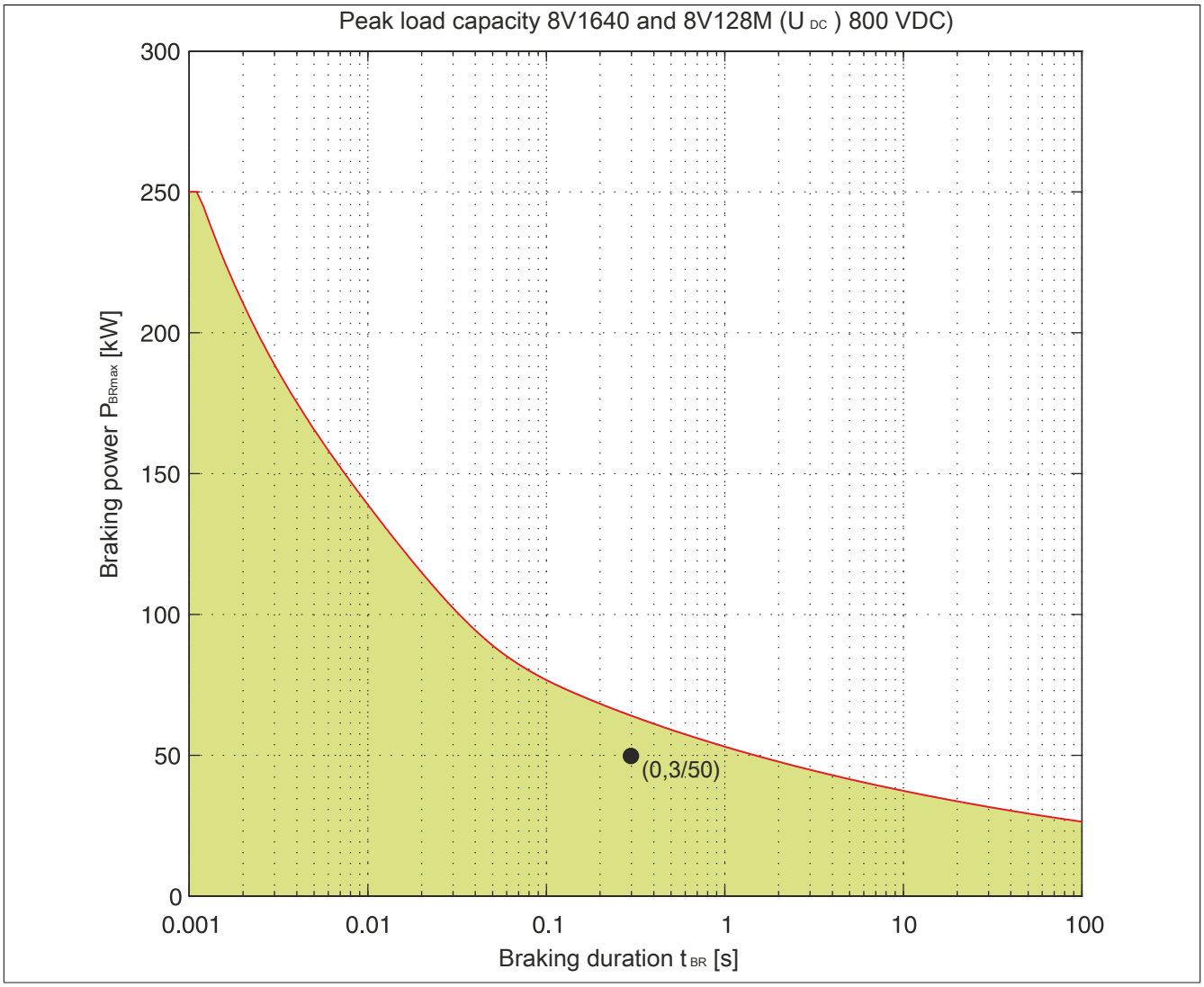


Figure 83: Peak load capacity - 8V1640 / 8V128M

The individual braking procedures within one cycle are entered in the diagram as points with the coordinates ($t_{BR}$/$P_{BRmax}$) and must all be within the permissible range (marked green). If this is not the case, then a different ACOPOS servo drive must be selected!

The individual braking procedures from the example application are entered in Fig. 83 "Peak load capacity - 8V1640 / 8V128M" ($t_{BR}$ = 0.3 s, $P_{BRmax}$ = 50 kW). These are within the permissible range; the selected ACOPOS servo drive is therefore suitable for the peak power of each individual braking procedure in the application.



Provided by Industrial Automation Co. • www.industrialautomationco.com • Parts & Repair: 877-727-8757

Step 4: Determine value of the required external braking resistor.

Maximum permissible braking resistor for the application:

$$R_{BRmaxAPPL} = \frac{U_{DCmax}^2}{P_{BRmaxAPPL}} = \frac{800V^2}{50000W} = 12,8\,\Omega$$

The value of the external braking resistor must meet the following criteria:

- $R_{BR} \geq R_{minServo} \Rightarrow R_{BR} \geq 2.5\ \Omega$
- $R_{BR} \geq \frac{P_{BRavgAPPL}}{I_{BRServo}^2} \Rightarrow R_{BR} \geq \frac{1500W}{30A^2} \Rightarrow R_{BR} \geq 1,67\,\Omega$
- $R_{BR} \leq R_{BRmaxAPPL} \Rightarrow R_{BR} \leq 12.8\ \Omega$

Therefore, a braking resistor or a combination of braking resistors must be selected with a resistance value between 2.5 Ω and 12.8 Ω.

Step 5: Select the external braking resistor.

## Caution!

**If the resistance falls below the minimum permitted value, then the brake chopper in the device could be destroyed!**

## Danger!

**During braking, voltages up to 900 VDC can occur on the external braking resistor. The external braking resistor must be able to handle these voltages.**

## Information:

**We recommend choosing braking resistor value so that its resistance value $R_{BR}$ is as close as possible to the maximum value permissible for the application $R_{BRmax}$, in order to keep the current low through the fuse on the ACOPOS servo drive's braking resistor connection.**

**For this purpose, it may be necessary to connect individual braking resistors in parallel or in series. It is important to ensure that the braking power to be dissipated is distributed as evenly as possible over all braking resistors.**

To obtain a resistance value suitable for the application, three 8B0W0079H000.001-1 braking resistors ($R_{BR}$ = 33 Ω) are connected in parallel (technical data in 4.3.1 "Basis of the calculation" on page 237):

- Resistance value:
  $$\frac{1}{R_{BR}} = \sum_{i=1}^{N} \frac{1}{R_{BR_i}} \Rightarrow R_{BR} = 11\Omega \leq 12,8\,\Omega$$
- Thermal capacity:
  $$c_{th} = \sum_{i=1}^{N} c_{th_i} \Rightarrow c_{th} = 77,8\frac{J}{K}$$

The continuous power $P_{BRN}$ and the thermal resistance $R_{th}$ of the selected combination of braking resistors depends on the mounting orientation:

- Horizontal mounting orientation:
  $$\frac{1}{R_{th}} = \sum_{i=1}^{N} \frac{1}{R_{th_i}} \rightarrow R_{th} = 0.355\frac{K}{H}$$
  $$P_{BRN} = \sum_{i=1}^{N} P_{BRN_i} \rightarrow P_{BRN} = 1896\ W$$
- Vertical mounting orientation:
  $$\frac{1}{R_{th}} = \sum_{i=1}^{N} \frac{1}{R_{th_i}} \rightarrow R_{th} = 0.284\frac{K}{H}$$
  $$P_{BRN} = \sum_{i=1}^{N} P_{BRN_i} \rightarrow P_{BRN} = 2370\ W$$





Provided by Industrial Automation Co. • www.industrialautomationco.com • Parts & Repair: 877-727-8757

## Information:

**Nominal continuous power $P_{BRN}$ of a braking resistor depends on the ambient temperature as well as on the maximum permissible temperature of the braking resistor.**

**The braking resistor's nominal power will be decreased if, for application reasons, the ambient temperature is increased and/or the braking resistor's maximum permissible temperature is limited (contact protection, warming of neighboring components, maximum warming of the control cabinet, installation position, etc.)!**

**Only for ACOPOS servo drives in the DC bus network!**

The braking resistors integrated in ACOPOS servo drives as well as braking resistors that can be connected externally are controlled using a specially developed procedure. This guarantees that the brake power is optimally and equally distributed on the braking resistors when the DC bus connection of ACOPOS servo drives is made between several units.

The following condition must be met for the external braking resistor in order for this occur: $P_{BRN} \geq \frac{U_{DC}^2}{30.R_{BR}}$

- Horizontal mounting orientation:
  $P_{BRN} \geq \frac{U_{DC}^2}{30.R_{BR}} \Rightarrow 1896W \geq \frac{800V^2}{30.11\Omega} \Rightarrow 1896W \geq 1939W$
  --> Condition not met.
- Vertical mounting orientation:
  $P_{BRN} \geq \frac{U_{DC}^2}{30.R_{BR}} \Rightarrow 2370W \geq \frac{800V^2}{30.11\Omega} \Rightarrow 2370W \geq 1939W$
  --> Condition met.

*Is the nominal continuous power $P_{BRN}$ of the selected braking resistor combination sufficient for the application's average brake power $P_{BRavgAPPL}$?*

The following condition must be met:

$P_{BRN} \geq P_{BRavgAPPL}$

This condition must be checked for all permissible mounting orientations:

- Horizontal mounting orientation:
  $P_{BRN} \geq P_{BRavgAPPL} \Rightarrow$ 1896W >1500W --> Nominal continuous power $P_{BRN}$ is sufficient.
- Vertical mounting orientation:
  $P_{BRN} \geq P_{BRavgAPPL} \Rightarrow$ 2370W >1500W --> Nominal continuous power $P_{BRN}$ is sufficient.

*Can the selected braking resistor conduct the incidental braking energy without exceeding the maximum braking resistor temperature for the application?*

The following condition must be met for this to happen:

$$P_{BRN} \geq \frac{W_{BR_i}}{t_i}.k$$



Provided by Industrial Automation Co. • www.industrialautomationco.com • Parts & Repair: 877-727-8757

The peak load factor k for any braking resistor can be determined using the following diagram:

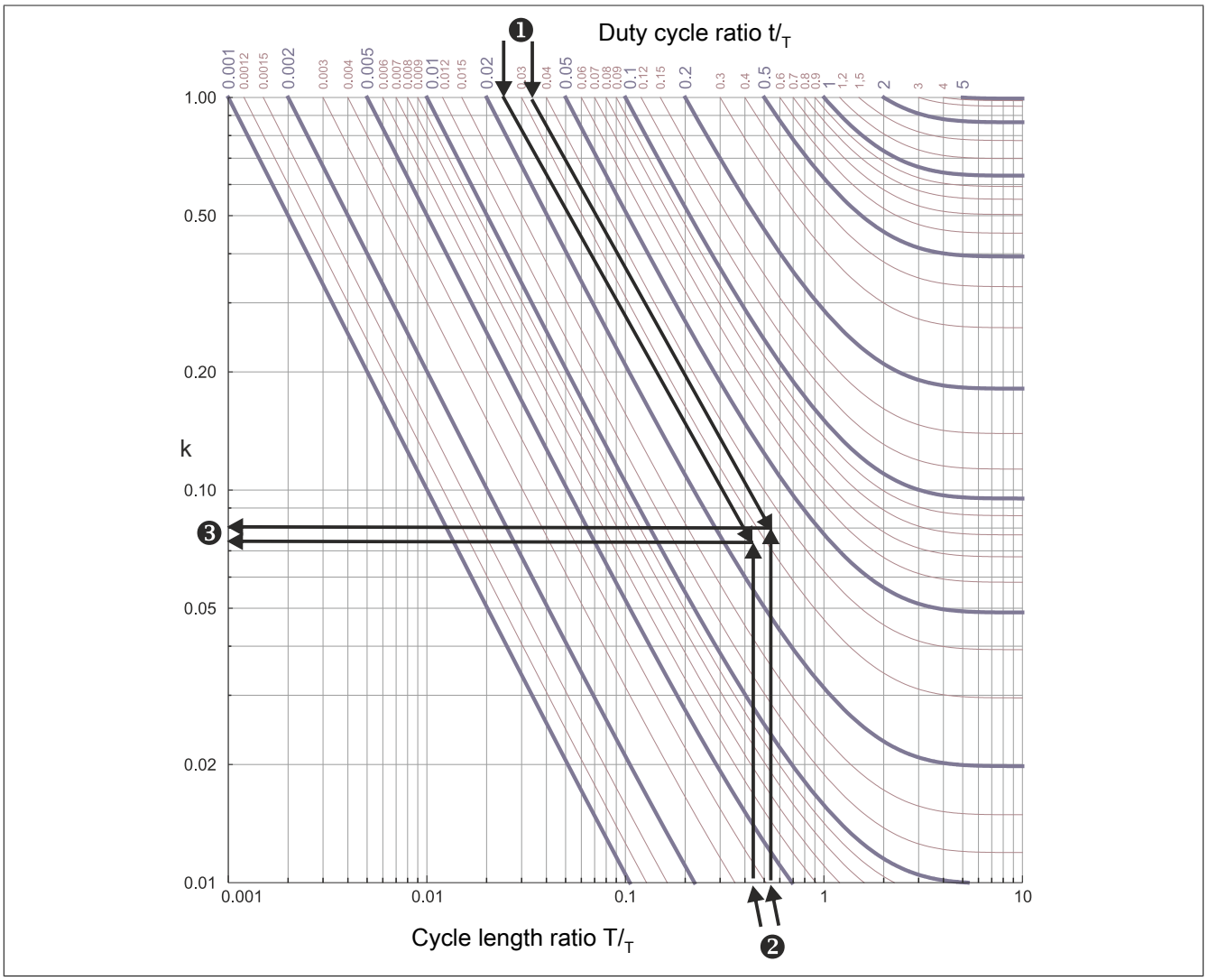


Figure 84: Determining the peak load factor k

k ... Peak load factor for the braking resistor
T ... Application cycle time (= $t_{Cycle}$)
t ... Sum of all braking times (total braking time) within one cycle
τ Thermal time constant of the braking resistor (= $R_{th} * c_{th}$)
...

1. Calculation of the duty cycle ratio
   - Horizontal mounting orientation:
     $$\frac{t}{T} = \frac{t_{BR1} + t_{BR2}}{R_{th} * c_{th}} = \frac{0.3 + 0.3}{0.355 * 67.8} = 0.025$$
   - Vertical mounting orientation:
     $$\frac{t}{T} = \frac{t_{BR1} + t_{BR2}}{R_{th} * c_{th}} = \frac{0.3 + 0.3}{0.284 * 67.8} = 0.031$$
2. Calculation of the cycle length ratio
   - Horizontal mounting orientation:
     $$\frac{T}{T} = \frac{t_{Cycle}}{R_{th} * c_{th}} = \frac{10}{0.355 * 67.8} = 0.415$$
   - Vertical mounting orientation:
     $$\frac{T}{T} = \frac{t_{Cycle}}{R_{th} * c_{th}} = \frac{10}{0.284 * 67.8} = 0.519$$





Provided by Industrial Automation Co. • www.industrialautomationco.com • Parts & Repair: 877-727-8757

3. Reading the peak load factor k based on the values from 1 and 2 in figure "Calculation of the peak load factor k"
    - Horizontal installation: k = 0.075
    - Vertical installation: k = 0.08

This condition must be checked for all permissible mounting orientations:

- Horizontal mounting orientation:
  $P_{BRN} \geq \frac{W_{BR_i}}{t_i} . k \Rightarrow 1896W \geq \frac{7500J}{0,3s} . 0,075 \Rightarrow 1896W \geq 1875W$
  --> The nominal power $P_{BRN}$ of the braking resistor is barely sufficient for the application - No reserves! Horizontal mounting orientations are therefore not recommended!
- Vertical mounting orientation:
  $P_{BRN} \geq \frac{W_{BR_i}}{t_i} . k \Rightarrow 2370W \geq \frac{7500J}{0,3s} . 0,08 \Rightarrow 2370W \geq 2000W$
  --> The nominal power $P_{BRN}$ of the braking resistor is sufficient for the application.

**Results**

Three B&R braking resistors 8B0W0079H000.001-1 connected in parallel and installed vertically on an ACOPOS servo drive 8V1640.00-2 power supply module meet the requirements of the application.



Provided by Industrial Automation Co. • www.industrialautomationco.com • Parts & Repair: 877-727-8757

## 4.4 Configuring brake resistor parameters

The braking resistors integrated in B&R drive systems or connected externally are controlled by a specially developed procedure. This guarantees that the brake power is optimally and equally distributed on the braking resistors when a DC bus connection is made between several units.

### 4.4.1 Using the integrated braking resistors

No configuration is required by the user.

### 4.4.2 Using external braking resistors

When using external braking resistors, the following parameters must be set for the drive system using B&R Automation Studio:

| ParID | Name | Formula symbols | Unit |
|---|---|---|---|
| 10 | Ohmic resistance | $R_{BR}$ | [Ω] |
| 11 | Maximum overtemperature on the external braking resistor | $\Delta T_{BRmax}$ | [°C] |
| 12 | Thermal resistance between braking resistor and environment[1)] | $R_{th}$ | [K/W] |
| 13 | Heat capacitance of the filament[2)] | $c_{th}$ | [Ws/°C] |
| 398 | Setting for an internal / external braking resistor<br><br>0 ... Internal (default)<br>1 ... External<br><br>**Information:**<br>**Switching is only possible during the ACOPOSservo drive initialization phase.** | --- | --- |

Table 186: ParIDs for setting external braking resistor parameters

1) Total thermal resistance $R_{thTot}$ for series or parallel connection of multiple ($n_{Br}$) equal braking resistors:

$$R_{thTot} = \frac{R_{th}}{n_{Br}}$$

2) Total heat capacitance of the filament $c_{thTot}$ for series or parallel connection of multiple ($n_{Br}$) equal braking resistors:

$$C_{thtotal} = Cth \cdot nBr$$

These parameters are usually listed in the data sheet from the respective manufacturer.[24)]

The parameters are based on the following thermal equivalent circuit diagram of the external braking resistor:

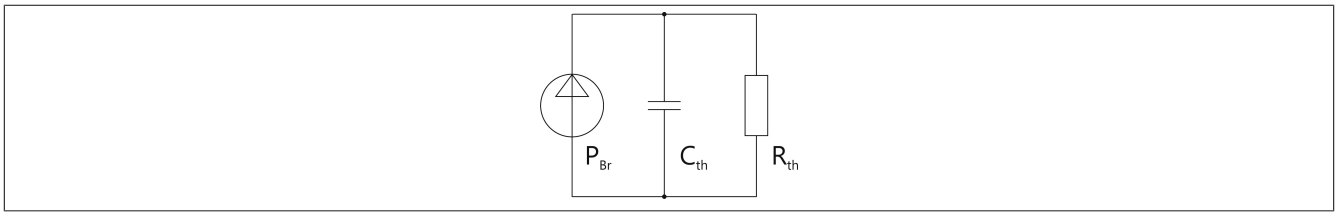


Figure 85: Thermal equivalent circuit diagram of the external braking resistor

If a value for maximum permissible temperature $T_{BRmax}$ of the external braking resistor is not specified, it can be calculated using the following formula:

$$T_{BRmax} = P_{BRN}.R_{th}$$

[24)] Σ SIGMA braking resistors from Danotherm (www.danotherm.com) are an example of reliable braking resistors.

# 5 Configuring ACOPOS servo drives

The plug-in modules for ACOPOS servo drives allow each servo drive to be individually configured according to the requirements of the application. When putting together plug-in module combinations, the power consumption must be checked. This then results in the current requirements of the ACOPOS servo drive configuration.

## 5.1 Maximum power output for all slots on the ACOPOS servo drive

The maximum power output for all slots ($P_{max}$) depends on the size of the ACOPOS servo drive:

| Name | ACOPOS | | | | | | | | |
|---|---|---|---|---|---|---|---|---|---|
| | 1010 | 1016 | 1022 | 1045 | 1090 | 1180 | 1320 | 1640 | 128 M |
| $P_{max}$ | Max. 16 W | | Max. 22 W | | | | | | |

Table 187: Maximum power output for all slots depending on the ACOPOS servo drive

The total power consumption for all plug-in modules must be less than or equal to the ACOPOS servo drive's maximum power output:

$$\sum P_{Modul}[W] \leq P_{max}[W]$$

Power consumption of the individual plug-in modules can be calculated from Tab. 188 "Power consumption Pmodule of ACOPOS plug-in modules" or are available in the technical data of the modules (see "Technical data" on page 27):

| Plug-in module | Power consumption $P_{module}$ |
|---|---|
| 8AC110.60-3 | Max. 0.7 W |
| 8AC114.60-2 | Max. 3 W |
| 8AC120.60-1 | Depends on the EnDat encoder connected |
| E0 ... EnDat single-turn, 512 lines | Max. 23 W |
| E1 ... EnDat multi-turn, 512 lines | Max. 31 W |
| E2 ... EnDat single-turn, 32 lines (inductive) | Max. 31 W |
| E3 ... EnDat multi-turn, 32 lines (inductive) | Max. 31 W |
| E4 ... EnDat single-turn, 512 lines | Max. 24 W |
| E5 ... EnDat multi-turn, 512 lines | Max. 27 W |
| E8 ... EnDat single-turn, 16 lines (inductive) | Max. 29 W |
| E9 ... EnDat multi-turn, 16 lines (inductive) | Max. 31 W |
| EA ... EnDat single-turn, 32 lines (inductive) | Max. 27 W |
| EB ... EnDat multi-turn, 32 lines (inductive) | Max. 30 W |
| 8AC121.60-1 | |
| With encoder current requirement of 0 mA | 0.35 W |
| With encoder current requirement of 100 mA | 1.4 W |
| With encoder current requirement of 170 mA | 2.1 W |
| 8AC122.60-3 | Max. 2.5 W |
| 8AC123.60-1 | Max. 7.5 W<br>Depends on the current requirements for the encoder connected [1)] |
| 8AC125.60-1 | Max. 45 W |
| 8AC125.60-2 | 22 W |
| 8AC125.61-2 | 58 W |
| 8AC126.60-1 | Max. 44 W |
| 8AC130.60-1 | Max. 0.8 W |
| 8AC131.60-1 | Max. 1 W |

Table 188: Power consumption $P_{module}$ of ACOPOS plug-in modules

1) The power consumption of the plug-in module can be approximated using the following formula:
$P_{Module}$ [W] = $P_{Encoder}$ [W] . k + 0.6 W
The power consumed by the encoder $P_{Encoder}$ is calculated from the selected encoder supply voltage (5 V / 15 V) and the current required:
$P_{Encoder}$ [W] = $U_{Encoder}$ [V] . $I_{Encoder}$ [A]
The following values must be used for k:
k = 1.2 (for 15 V encoder supply)
k = 1.75 (for 5 V encoder supply)

## 5.2 24 VDC current requirements for the ACOPOS servo drive

The 24 VDC current requirements ($I_{24VDC}$) must be regarded differently depending on the size of the ACOPOS servo drive.

- The following estimation applies to ACOPOS 1010, 1016, 1022, 1045 and 1090:

  $$I_{24\,VDC}[A] = I_{24\,VDC_{max}}[A] - \frac{1.1}{24\ V.k} \cdot (P_{max} - \sum P_{Module}[W])$$

- This estimate can also be used for the ACOPOS 1180, 1320, 1640 and 128M as long as a mains input voltage is not applied. As soon as a mains input voltage is applied to these servo drives, the 24 VDC supply voltage is created via the integrated DC bus power supply; the 24 VDC current requirements ($I_{24VDC}$) is then reduced to 0.

The 24 VDC maximum current consumption of the ACOPOS servo drives is specified in Tab. 189 "Maximum current requirements and constant k " or in the technical data of the ACOPOS servo drives (see "Technical data" on page 27).

| Name | ACOPOS | | | | | | | | |
|---|---|---|---|---|---|---|---|---|---|
| | 1010 | 1016 | 1022 | 1045 | 1090 | 1180 | 1320 | 1640 | 128 M |
| $I_{24VDCmax}$ | 1.47 A | | 2.5 A | | | 2.8 A | | 4.6 A | 5.7 A |
| k | 0.73 | | 0.64 | | | 0.63 | | 0.58 | |

Table 189: Maximum current requirements and constant k

The 24 VDC total current consumption for the ACOPOS servo drive is made up of the 24 VDC current requirements, the current on the 24 VDC output (only for ACOPOS 1180/1320/1640/128M) and the current for the motor holding brake (if used):

$$I_{24\,VDC_{Total}} = I_{24\,VDC} + I_{24\,VDC_{out}} + I_{Br}$$

In this case, make sure that the 24 VDC total current consumption does not exceed the maximum current load for the connection terminals.

# 6 Dimensioning cooling systems for cooling control cabinets

## 6.1 General dimensioning criteria

- What are the environmental conditions where the control cabinet will be located (ambient temperature $T_A$, humidity, installation altitude above sea level)?
- How is the air circulation (intake and outlet) where the control cabinet will be located? Particularly small spaces can become significantly warmer due to the heat dissipation from a cooling device.
- Is the ambient air clean or contaminated with dust, oil, etc?
- Which type of control cabinet installation is intended according to DIN 57660, Part 500?
- Is the control cabinet open (allowing air flow) or closed (no air flow)? Control cabinets that are closed (no air flow) can only dissipate power loss via the control cabinet walls.
- What kind of material are the control cabinet walls made of (specification of the heat transfer coefficient k)?
- What is the control cabinet's minimum required level of protection in accordance with EN 60529?
- How high is the specified internal temperature $T_{Iset}$ of the control cabinet? This value must be lower than the lowest permissible ambient temperature of all components used in the control cabinet.
- Is a coolant circulation available where the control cabinet is located?
- Is the maximum ambient temperature $T_{Amax}$ lower than the desired internal temperature $T_{Iset}$ of the control cabinet?

### 6.1.1 Basic selection of the cooling system

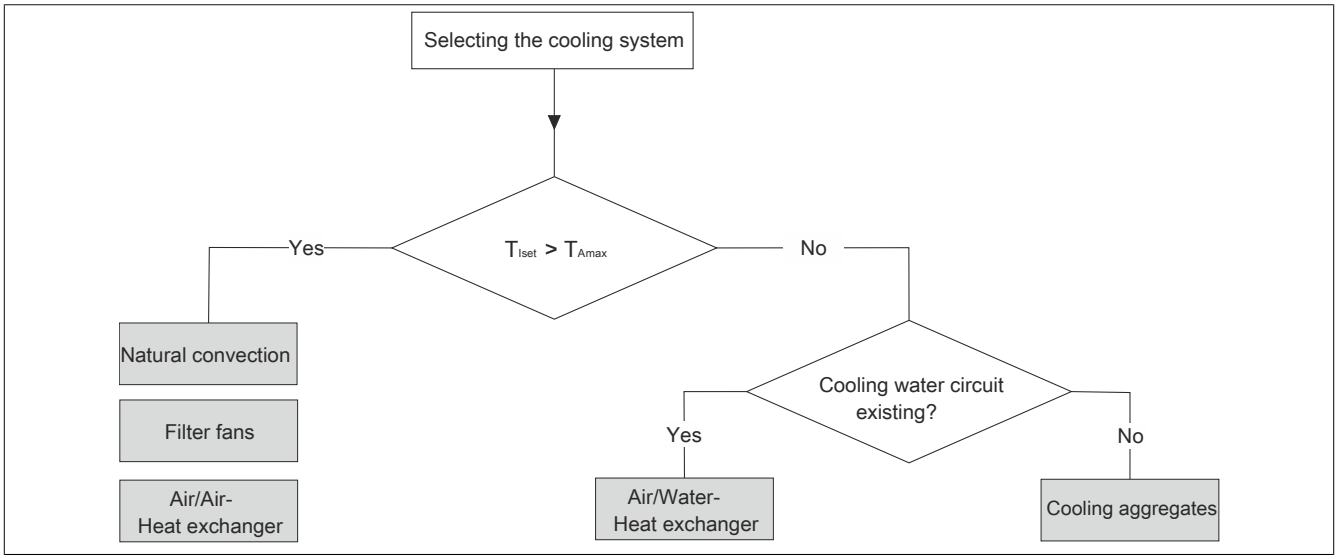


Figure 86: Basic selection of the cooling system

## 6.2 Natural convection

In this case, the power loss is emitted outwards through the control cabinet walls.

### Information:

**The ambient temperature $T_A$ must be considerably lower than the internal temperature $T_I$ of the control cabinet.**

The heat capacity emitted from the control cabinet to the environment strongly depends on how the control cabinet is installed: A housing located in an open space can emit more heat to its environment than a housing that is mounted to a wall or built into a recess.

The calculation of the effective control cabinet surface A depending on the type of control cabinet installation is determined in DIN VDE 57 660 part 500 or IEC 890 (and VDE 0660 part 890):

| Mounting arrangement in accordance with IEC 890 | | Formula for calculating A [m²] 1) |
|---|---|---|
|  | Detached single cabinet, free-standing on all sides | A = 1.8 x H x (W + D) + 1.4 x W x D |
|  | Single cabinet, against a wall | A = 1.4 x W x (H + D) + 1.8 x D x H |
|  | First or last cabinet, detached on three sides | A = 1.4 x D x (H + W) + 1.8 x W x H |
|  | First or last cabinet, against a wall | A = 1.4 x H x (W + D) + 1.4 x W x D |
|  | Middle cabinet, detached on two sides | A = 1.8 x W x H + 1.4 x W x D + D x H |
|  | Middle cabinet, against a wall | A = 1.4 x W x (H + D) + D x H |
|  | Middle cabinet, against a wall, with covered roof | A = 1.4 x W x H + 0.7 x W x D + D x H |

Table 190: Calculation of the effective control cabinet surface A (DIN VDE 57 660 part 500 or IEC 890)

1) W... Control cabinet width [m]; H ... Control cabinet height [m]; D ... Control cabinet depth [m].



### 6.2.1 Dimensioning

1. Determine the heat dissipation $Q_v$ of all devices in the control cabinet.
2. Calculate the effective control cabinet surface area A.
3. Calculate the maximum control cabinet temperature $T_{Imax}$: [25)]

$$T_{Imax} = \frac{Q_V}{k.A} + T_U$$

The control cabinet's maximum internal temperature $T_{Imax}$ must be lower than the maximum permissible ambient temperature of the components used inside the control cabinet.

### 6.2.2 Example

Two ACOPOS 8V1320.00-2 units and an ACOPOS 8V1640.00-2 are installed in a control cabinet. The heat dissipation from the braking resistors was determined over one machine cycle and is on average 800 W. The heat dissipation from all other active devices in the control cabinet is 500 W.

The steel control cabinet is 1 m wide, 2 m high, 0.5 m deep and is free-standing on all sides. The internal temperature of the control cabinet should not exceed 40°C. The ambient temperature is 30°C.

Now determine whether the heat dissipation occurring in the control cabinet can be diverted by its own natural convection.

**1) Determine the heat dissipation of all devices in the control cabinet.**

| Components in the control cabinet | Quantity | Heat dissipation per component [W] | Total heat dissipation [W] |
|---|---|---|---|
| 8V1320.00-2 | 2 | 800 1) | 1600 |
| 8V1640.00-2 | 1 | 1600 1) | 1600 |
| Braking resistors | --- | 800<br>(average value over one machine cycle) | 800 |
| All other active devices | --- | --- | 500 |
| | | **Total:** | **4500** |

Table 191: Determining the heat dissipation of all devices in the control cabinet

1) The heat dissipation for ACOPOS servo drives is specified in the "Technical data" chapter. Maximum values are used in this example.

25) k ... Heat transfer coefficient [W/m²K]; for steel panel: k = 5.5
If the heat dissipation $Q_V$ in the control cabinet is unknown, the actual power loss can be calculated by measuring $T_A$ and $T_I$: $Q_V = A \cdot k \cdot (T_{Imax} - T_A)$

**2) Calculate the effective control cabinet surface area.**

A = 1.8 x H x (W + D) + 1.4 x W x D = 1.8 x 2 x (1+0.5) + 1.4 x 1 x 0.5 = 6.1 m²

**3) Calculate the control cabinet inside temperature $T_I$.**

$$T_I = \frac{Q_V}{k.A} + T_U = \frac{4500}{5.5.6.1} + 30 = 164°C$$

The control cabinet's calculated internal temperature considerably exceeds the desired internal temperature of 40°C. Therefore, the heat dissipation occurring inside the control cabinet cannot be diverted by its own natural convection. Another method must be used for cooling the control cabinet.

## 6.3 Filter fans

Filter fans are also a simple type of control cabinet cooling. The heat is dissipated by adding ambient air circulation and simultaneously allowing the heated air inside the control cabinet to be diverted.

# Information:

**To use filter fans, the ambient temperature $T_A$ must be considerably lower than the internal temperature $T_I$ of the control cabinet.**

### 6.3.1 Dimensioning

1. Determine the heat dissipation $Q_v$ of all devices in the control cabinet.
2. Determine the control cabinet's maximum internal temperature $T_{Imax}$ at nominal load or identify it using the maximum ambient temperature of the components being used.
3. Specify the ambient temperature $T_A$ of the control cabinet.
4. Specify the control cabinet's installation altitude h.
   Depending on the control cabinet's installation altitude, a compensation factor f might be required, which can be found in the following table:

| Installation altitude h [m] | Compensation factor f [m³K/Wh] |
|---|---|
| 0 ≤ h ≤ 100 | 3.1 |
| 100 < h ≤ 250 | 3.2 |
| 250 < h ≤ 500 | 3.3 |
| 500 < h ≤ 750 | 3.4 |
| 750 < h ≤ 1000 | 3.5 |

Table 192: Compensation factor f depending on the control cabinet's installation altitude

5. Calculate the air flow volume V:

$$V[m^3/h] = f.\frac{Q_V}{T_{Imax} - T_A}$$

The correct filter fan can now be selected based on the calculated air flow volume V.

# Information:

**The required protection level of the control cabinet in accordance with EN 60529 must also be taken into consideration when selecting a filter fan.**

# Information:

**Replace the air filter periodically according to the maintenance intervals of the manufacturer!**

### 6.3.2 Example

Two ACOPOS 8V1320.00-2 units and an ACOPOS 8V1640.00-2 are installed in a control cabinet. The heat dissipation from the braking resistors was determined over one machine cycle and is on average 800 W. The heat dissipation from all other active devices in the control cabinet is 500 W.

The internal temperature of the control cabinet should not exceed 40°C. The ambient temperature is 30°C. The control cabinet should be installed at 800 m above sea level.

The right filter fan must be selected for this control cabinet.

**1) Determine the heat dissipation of all devices in the control cabinet.**

| Components in the control cabinet | Quantity | Heat dissipation per component [W] | Total heat dissipation [W] |
|---|---|---|---|
| 8V1320.00-2 | 2 | 800 [1)] | 1600 |
| 8V1640.00-2 | 1 | 1600 [1)] | 1600 |
| Braking resistors | --- | 800<br>(average value over one machine cycle) | 800 |
| All other active devices | --- | --- | 500 |
| | | **Total:** | **4500** |

Table 193: Determining the heat dissipation of all devices in the control cabinet

1) The heat dissipation for ACOPOS servo drives is specified in the "Technical data" chapter. Maximum values are used in this example.

**2) Determine the control cabinet's maximum internal temperature $T_{Imax}$ at nominal load or identify it using the maximum ambient temperature of the components being used.**

The internal temperature of the control cabinet should not exceed 40°C.

**3) Specify the ambient temperature $T_A$ of the control cabinet.**

The ambient temperature is 30°C.

**4) Specify the control cabinet's installation altitude h.**

Correction factor "f" is available in table "Correction factor f depending on the installation elevation of the control cabinet" on page 252 and is 3.5 m³K/Wh.

**5) Calculate the air flow volume V.**

This results in an air flow volume of

$$V = f.\frac{Q_V}{T_{Imax} - T_A} = 3{,}5.\frac{4500}{40-30} = 1575 m^3/h$$

The correct filter fan can now be selected based on the determined air flow volume.

## 6.4 Air/air heat exchangers

Air/Air heat exchangers dissipate the heat from the control cabinet using two hermetically isolated air currents in the opposing current principle. This prevents dust, oil and other (aggressive) materials in the ambient air from penetrating the control cabinet.

### Information:

**To use air/air heat exchangers, the ambient temperature $T_A$ must be considerably lower than the internal temperature $T_I$ of the control cabinet.**

### 6.4.1 Dimensioning

1. Determine the heat dissipation $Q_v$ of all devices in the control cabinet.
2. Determine the control cabinet's maximum internal temperature $T_{Imax}$ at nominal load or identify it using the maximum ambient temperature of the components being used.
3. Specify the ambient temperature $T_A$ of the control cabinet.
4. Calculate the effective control cabinet surface area A.
5. Calculate the specific heat capacity $q_W$: [26)]

$$q_w[\frac{W}{K}] = \frac{Q_V - (A.(T_{Imax} - T_A).k)}{T_{Imax} - T_A}$$

The right air/air heat exchanger can be selected based on the specific heat capacity $q_W$.

### Information:

**The required protection level of the control cabinet in accordance with EN 60529 must also be taken into consideration when selecting an air/air heat exchanger.**

### 6.4.2 Example

Two ACOPOS 8V1320.00-2 units and an ACOPOS 8V1640.00-2 are installed in a control cabinet. The heat dissipation from the braking resistors was determined over one machine cycle and is on average 800 W. The heat dissipation from all other active devices in the control cabinet is 500 W.

The steel control cabinet is 1 m wide, 2 m high, 0.5 m deep and is free-standing on all sides. The internal temperature of the control cabinet should not exceed 40°C. The ambient temperature is 30°C.

The right air/air heat exchanger must be selected for this control cabinet.

**1) Determine the heat dissipation of all devices in the control cabinet.**

| Components in the control cabinet | Quantity | Heat dissipation per component [W] | Total heat dissipation [W] |
|---|---|---|---|
| 8V1320.00-2 | 2 | 800 [1)] | 1600 |
| 8V1640.00-2 | 1 | 1600 [1)] | 1600 |
| Braking resistors | --- | 800<br>(average value over one machine cycle) | 800 |
| All other active devices | --- | --- | 500 |
| | | **Total:** | **4500** |

Table 194: Determining the heat dissipation of all devices in the control cabinet

1) The heat dissipation for ACOPOS servo drives is specified in the "Technical data" chapter. Maximum values are used in this example.

**2) Determine the control cabinet's maximum internal temperature $T_{Imax}$ at nominal load or identify it using the maximum ambient temperature of the components being used.**

The internal temperature of the control cabinet should not exceed 40°C.

**3) Specify the ambient temperature $T_A$ of the control cabinet.**

The ambient temperature is 30°C.

26) k ... Heat transfer coefficient [W/m²K]; for steel panel: k = 5.5

**4) Calculate the effective control cabinet surface area.**

A = 1.8 x H x (W + D) + 1.4 x W x D = 1.8 x 2 x (1 + 0.5) + 1.4 x 1 x 0.5 = 6.1 m²

**5) Calculate the specific heat capacity.**

The heat transfer coefficient k for steel panels is 5.5 W/m²K.

This results in a specific heat capacity $q_W$ of

$$q_W = \frac{Q_v - (A.(T_{Imax} - T_A).k)}{T_{Imax} - T_A} = \frac{4500 - (6,1.(40 - 30).5,5)}{40 - 30} = 416,45\frac{W}{K}$$

The right air/air heat exchanger can be selected based on the determined specific heat capacity $q_W$.





Provided by Industrial Automation Co. • www.industrialautomationco.com • Parts & Repair: 877-727-8757

## 6.5 Air/water heat exchangers / Cooling units

Air/water heat exchangers and cooling units dissipate heat via a cooling circulation system. This prevents dust, oil and other (aggressive) materials in the ambient air from penetrating the control cabinet.

### 6.5.1 Dimensioning

1. Determine the heat dissipation $Q_v$ of all devices in the control cabinet.
2. Determine the control cabinet's maximum internal temperature $T_{Imax}$ at nominal load or identify it using the maximum ambient temperature of the components being used.
3. Specify the ambient temperature $T_A$ of the control cabinet.
4. Calculate the effective control cabinet surface area A.
5. Calculate the required cooling capacity $Q_E$: [27)]
   $Q_E[W] = Q_V - (A \cdot (T_{Imax} - T_A) \cdot k)$

The right air/water heat exchanger or cooling unit can now be selected based on the required cooling capacity $Q_E$.

## Information:

**The required protection level of the control cabinet in accordance with EN 60529 must also be taken into consideration when selecting an air/water heat exchanger or cooling unit.**

### 6.5.2 Example

#### Scenario

Two ACOPOS 8V1320.00-2 units and an ACOPOS 8V1640.00-2 are installed in a control cabinet. The heat dissipation from the braking resistors was determined over one machine cycle and is on average 800 W. The heat dissipation from all other active devices in the control cabinet is 500 W.

The steel control cabinet is 1 m wide, 2 m high, 0.5 m deep and is free-standing on all sides. The internal temperature of the control cabinet should not exceed 40°C. The ambient temperature is 30°C.

The right air/water heat exchanger or cooling unit must be selected for this control cabinet.

**1) Determine the heat dissipation of all devices in the control cabinet.**

| Components in the control cabinet | Quantity | Heat dissipation per component [W] | Total heat dissipation [W] |
|---|---|---|---|
| 8V1320.00-2 | 2 | 800 [1)] | 1600 |
| 8V1640.00-2 | 1 | 1600 [1)] | 1600 |
| Braking resistors | --- | 800<br>(average value over one machine cycle) | 800 |
| All other active devices | --- | --- | 500 |
| | | **Total:** | **4500** |

Table 195: Determining the heat dissipation of all devices in the control cabinet

1) The heat dissipation for ACOPOS servo drives is specified in the "Technical data" chapter. Maximum values are used in this example.

**2) Determine the control cabinet's maximum internal temperature $T_{Imax}$ at nominal load or identify it using the maximum ambient temperature of the components being used.**

The internal temperature of the control cabinet should not exceed 40°C.

**3) Specify the ambient temperature $T_A$ of the control cabinet.**

The ambient temperature is 30°C.

**4) Calculate the effective control cabinet surface area.**

A = 1.8 x H x (W + D) + 1.4 x W x D = 1.8 x 2 x (1 + 0.5) + 1.4 x 1 x 0.5 = 6.1 m²

**5) Calculate the required cooling capacity.**

The heat transfer coefficient k for steel panels is 5.5 W/m²K.

This results in a required cooling capacity $Q_E$ of

$Q_E = Q_V - (A \cdot (T_{Imax} - T_A) \cdot k) = 4500 - (6,1 \cdot (40 - 30) \cdot 5,5) = 4164,5W$

[27)] k ... Heat transfer coefficient [W/m²K]; for steel panel: k = 5.5

The right air/water heat exchanger or cooling unit can now be selected based on the determined required cooling capacity $Q_E$.





Provided by Industrial Automation Co. • www.industrialautomationco.com • Parts & Repair: 877-727-8757

# 7 Formula variables used

| Symbol | Unit | Descriptions |
|---|---|---|
| A | mm² | Wire cross section of the line conductors |
| $A_{PE}$ | mm² | Minimum wire cross section of the protective ground connection |
| $C_A$ | F | Discharge capacitance |
| $C_{th}$ | Ws/°C | Thermal capacity |
| f | m³K/Wh | Correction factor |
| $F_{eff}$ | N | RMS value of the force |
| $f_{MAINS}$ | Hz | Mains frequency |
| $I_0$ | | Stall current of the motor |
| $I_{24\ VDC}$ | A | 24 VDC current consumption |
| $I_{24VDCTotal}$ | A | 24 VDC total current consumption |
| $I_{24VDCout}$ | A | Current at the 24 VDC output of the ACOPOS servo drive (max. 0.5 A) |
| $I_A$ | A | Leakage current via protective ground conductor (PE) |
| $I_B$ | A | Rated current of fuse protection |
| $I_{BRServo}$ | A | Rated current of built-in fuse |
| $I_G$ | A | Max. current consumption of the encoder |
| $I_{Encoder}$ | A | Encoder current |
| $I_L$ | A | Current of the motor overload protection |
| $I_{max}$ | m | Max. encoder cable length |
| $I_N$ | A | Nominal current of the motor |
| $I_{MAINS}$ | A | Expected current load |
| $I_q$ | A | Thermal equivalent RMS value of the current |
| $I_Z$ | A | Permitted current-carrying capacity of a cable |
| k | --- | General constant |
| k | W/m²K | Heat transmission coefficient |
| $k.v_{average}$ | m/s | |
| $k_{TEMP}$ | | |
| $M_{(t)}$ | | Torque |
| $M_{eff}$ | Nm | Effective load torque over one cycle |
| $M_i$ | Nm² | |
| $n_{AVG}$ | | Average motor speed |
| $n_i$ | | |
| $N_m$ | | Tightening torque for the terminal screws |
| $n_{average}$ | rpm | Average speed over one cycle |
| $n_N$ | | Nominal speed of the motor |
| p | Ω mm²/m | Specific resistance |
| $P_{BR(t)}$ | W | Brake power |
| $P_{BRavg}$ | | Average braking power over one cycle |
| $P_{BRavgAPPL}$ | | Average braking power of the application |
| $P_{BRmax}$ | kW | Maximum power of braking resistor |
| $P_{BRmax1}$ | kW | Maximum braking power of braking procedure 1 |
| $P_{BRmax2}$ | kW | Maximum braking power of braking procedure 2 |
| $P_{BRmaxAPPL}$ | kW | |
| $P_{BRN}$ | W | Nominal continuous power |
| $P_{Encoder}$ | W | Encoder performance |
| $P_{Module}$ | W | Power consumption of the plug-in module |
| $Q_{BRmax}$ | J | |
| $Q_E$ | W | Required cooling power |
| $Q_{maxTot}$ | | |
| $Q_V$ | W | Power dissipation in the control cabinet |
| $q_W$ | | Specific heat output |
| $R_{BR}$ | Ω | Braking resistor |
| $R_{Tot}$ | | |
| $R_{minServo}$ | Ω | Min. permissible braking resistance |
| $R_{th}$ | °C/W | Thermal resistance between braking resistor and environment |
| $R_{thTot}$ | | |
| S | VA | Apparent power |
| t | | Sum of all braking times (total braking time) within a cycle |
| T | | Thermal time constant of the braking resistor ($R_{th}$ * $c_{th}$) |
| $T = t_{Cycle}$ | | Cycle time of the application |
| $t_0 1$ | | Starting time of braking procedure 1 |
| $t_0 2$ | | Starting time of braking procedure 2 |
| $T_{amb}$ | °C | Ambient temperature |
| $t_{BR} 1$ | s | Braking time 1 |
| $t_{BR} 2$ | s | Braking time 2 |
| $T_{BRmax}$ | °C | Maximum permissible overtemperature of the braking resistor |
| $t_{Cycle}$ | s | Cycle duration |
| $t_{Imax}$ | °C | Maximum internal temperature of the control cabinet |

Table 196: Formula symbols used

| Symbol | Unit | Descriptions |
|---|---|---|
| $T_{Iset}$ | °C | Internal temperature of the control cabinet |
| $T_{M_AMB}$ | | Current ambient temperature of the motor |
| $T_{M_AMB_N}$ | | Nominal ambient temperature of the motor |
| $T_{M_LIM}$ | | Maximum permissible motor temperature |
| $t_{PBR}1$ | | End time of braking procedure 1 |
| $t_{PBR}2$ | | End time of braking procedure 2 |
| $T_U$ | °C | Ambient temperature |
| $T_{CYCLE}$ | s | Cycle time |
| $U_{DC}$ | VDC | Peak load capacity |
| $U_{Encoder}$ | V | Encoder voltage |
| $U_{Gmin}$ | V | Minimum permissible supply voltage of the encoder |
| $U_{MAINS}$ | V | Nominal voltage (phase - phase) |
| $V_{average}$ | m/s | |
| w(t) | | Angular velocity |
| $W_{BR}1$ | | Braking energy of braking procedure 1 |
| $W_{BR}2$ | | Braking energy of braking procedure 2 |
| $W_{BRTot}$ | | Total braking energy |

Table 196: Formula symbols used





Provided by Industrial Automation Co. • www.industrialautomationco.com • Parts & Repair: 877-727-8757

# Chapter 5 • Wiring

## Information:

**This chapter contains general information about the wiring of ACOPOS servo drives.**

**For the pinouts of the servo drives, see chapter "Technical data":**

**ACOPOS 1010, 1016:** **"Wiring" on page 49**

**ACOPOS 1022, 1045, 1090:** **"Wiring " on page 68**

**ACOPOS 1180, 1320:** **"Wiring " on page 83**

**ACOPOS 1640, 128M:** **"Wiring" on page 98**

## 1 General information

### 1.1 EMC-compatible installation

#### 1.1.1 General information

If the directives for elecromagnetic compatibility of the installation are followed, ACOPOS servo drives meet EMC directives 2004/108/CE and low-voltage directives 2006/95/CE. They also meet the requirements for harmonized EMC product standard IEC 61800-3:2004 for industrial areas (second environment).

Additional EMC measures must be implemented by the machine or system manufacturer in the event that the product standard for the machine includes lower limit values or the machine conforms to the basic standard IEC 61000-6-4. Additional EMC measures may also be needed for machines with a large number of ACOPOS servo drives. The installation of a central line filter is mostly sufficient in such cases. Proof of conformity to required limit values must be provided by the manufacturer or distributor of the machine or system in accordance with the guidelines for implementing the EMC directive.

Additional EMC measures are required when operating ACOPOS servo drives in a residential area or when connecting ACOPOS servo drives to a low voltage system that also supplies buildings in a residential area (first environment) without an intermediate transformer.

#### 1.1.2 Installation guidelines

1. The control cabinet or system must be constructed properly.
2. To prevent the effects of disturbances, the following lines must be properly shielded:
    - Motor cables
    - Encoder cables
    - Control cables
    - Data cables
3. Inductive switching elements such as contactors or relays must be equipped with corresponding suppressor elements such as varistors, RC elements or damping diodes.
4. All electrical connections must be kept as short as possible.
5. Cable shields must always be attached to designated shield terminals and the connector housing. Twisting the braided shield or extending it with single conductors (pigtail) is not permitted!
6. Shielded cables with copper or tinned copper braiding must be used.
7. Unused cable conductors must be grounded on both sides whenever possible.

## Information:

**To satisfy UL/CSA requirements, components of B&R drive systems are only permitted to be wired with copper wires with a permitted wire temperature of at least 75°C.**

The ground connections and shield connections must be made as illustrated in the following diagram:

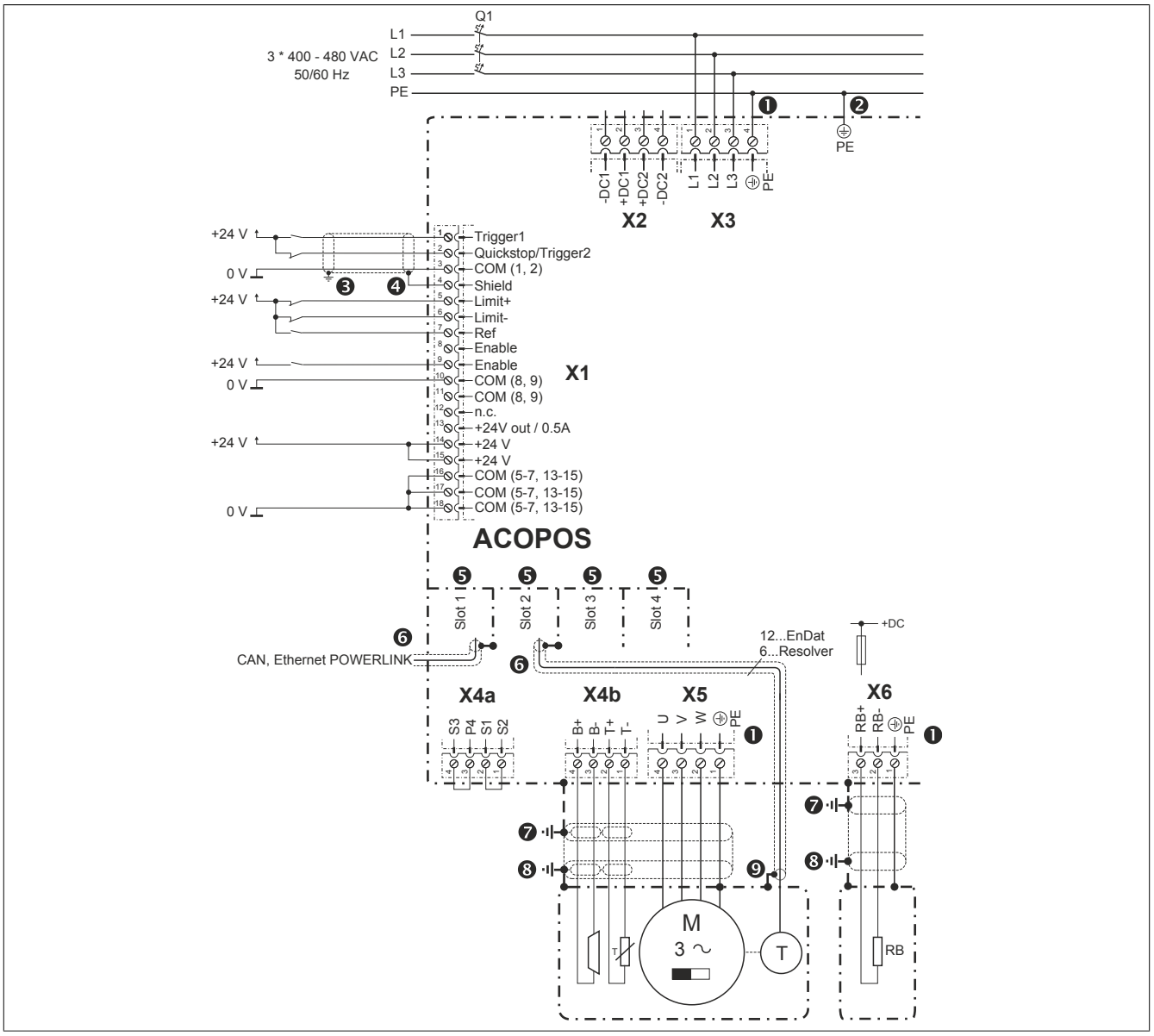


Figure 87: Connection diagram for ground and shield connections





Provided by Industrial Automation Co. • www.industrialautomationco.com • Parts & Repair: 877-727-8757

1. The protective ground wires (PE) for the power mains, the motor lines and external braking resistor connection are internally connected to the housing of the ACOPOS servo drive.
2. The second protective ground connection is necessary because of the increased discharge current (>3.5 mA) on ACOPOS servo drives 1010, 1016, 1022, 1045, 1090, 1180 and 1320. The same cross section as the protective ground conductor for the mains power input must be used.
3. Both trigger inputs are only filtered internally with approx. 50 µs. Make sure the cable shield is grounded properly.
4. The cable shield must be attached to the shield connector.
5. On all plug-in modules, the two screws used to fasten the module must be tightened so that the mounting bracket is connected to ground.
6. Cable connection via DSUB connector:
   The cable shield must be secured over a wide area in the metallic or metal-plated DSUB housing using the clamp provided for this purpose. The mounting screws on the DSUB housing must be tightened.

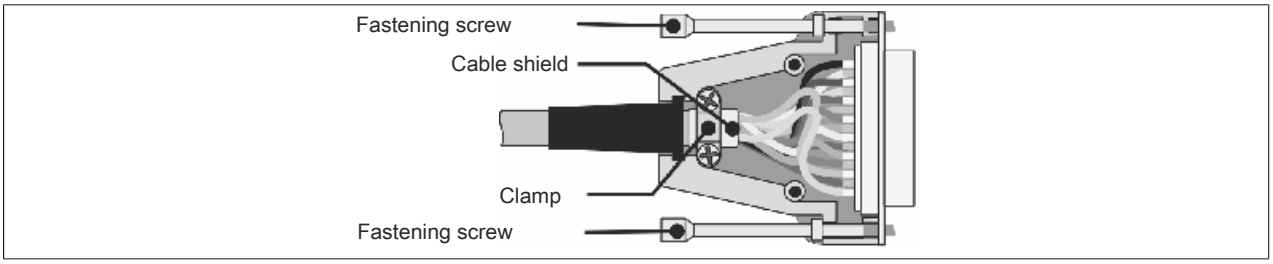


Figure 88: Cable shielding in DSUB housing

Cable connection via terminals:
The cable shield must be attached to the corresponding shield connection terminal.

Cable connection via RJ45 connector:
Additional grounding of the cable shield provides improved EMC characteristics. Grounding should take place on both sides, over a large area and near the connector.

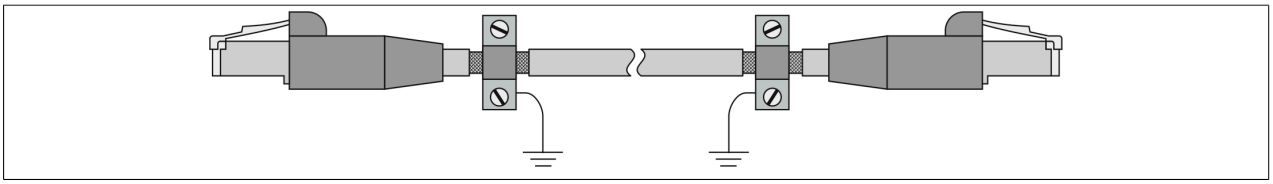

Figure 89: Male RJ45 connector - Grounding the cable shield

## Information:

**When wiring POWERLINK networks with POWERLINK cables from B&R, no additional grounding of the cable shield is required to ensure resistance to disturbances per EN 61800-3!**



Provided by Industrial Automation Co. • www.industrialautomationco.com • Parts & Repair: 877-727-8757

7. The cable shield for the motor line or the connection cable for the external braking resistor is connected with the housing of the ACOPOS servo drive via the grounding plate using the grounding clamp provided:

| Shield connection for the motor cable using grounding clamps | |
|---|---|
| ACOPOS 1010, 1016 | ACOPOS 1022, 1045, 1090 |
| 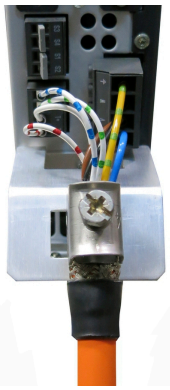 | 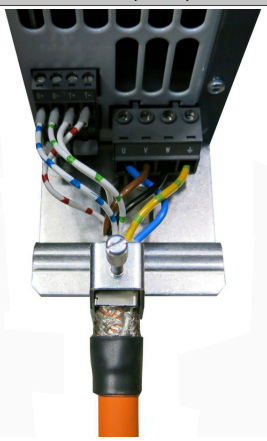 |
| ACOPOS 1180, 1320 | ACOPOS 1640, 128M |
| 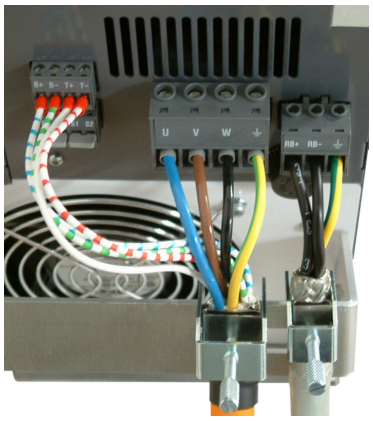 | 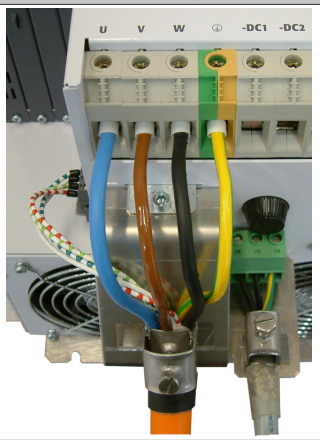 |

Table 197: Grounding of the motor cable on the ACOPOS servo drive

8. On the motor side, the cable shield of the motor line is connected to the motor housing via the motor connector and connected to ground via the machine. The cable shield on the connection cable for the external braking resistor must be connected with the housing of the braking resistor.
9. On the motor side, the encoder cable shield must be connected to the motor housing via the encoder connector and connected to ground via the machine.

   For external encoders, the cable shield of the encoder cable must be connected (on the encoder side) with the machine and therefore with ground via the encoder connector.





Provided by Industrial Automation Co. • www.industrialautomationco.com • Parts & Repair: 877-727-8757

## 1.2 Insulation and high voltage testing

### 1.2.1 Insulation resistance testing in accordance with EN 60204

In accordance with EN 60204, the insulation resistance of electrical equipment is measured with 500 VDC between the main circuit conductors and the protective ground conductor system and is not permitted to be below a value of 1 MΩ. Testing individual sections of the system is permitted.

**ACOPOS servo drive power mains connection (X3)**

Insulation resistance testing can be carried out on the ACOPOS servo drive power mains connection (X3) as described above; however, values >1 MΩ are not expected because of the overvoltage protection circuit of the power mains.[28)] The 50 kΩ minimum value required as specified in EN 60204, Section 18.3 is exceeded anyway.

**ACOPOS servo drive motor connection (X5)**

> **Warning!**
>
> **Insulation testing is not permitted to be carried out on the ACOPOS servo drive motor connection (X5) because that would destroy the ACOPOS servo drive!**
>
> **The motor cable must be removed from the ACOPOS servo drive motor connection (X5) before measuring the insulation resistance!**

**B&R motors and B&R motor cables**

In principle, an insulation resistance measurement can be carried out on B&R motor cables and B&R motors. However, the insulation resistance can be lower than 1 MΩ depending on the motor that is connected. The 50 kΩ minimum value required as specified in EN 60204, Section 18.3 is exceeded anyway.

> **Warning!**
>
> **Insulation testing is not permitted to be carried out on the ACOPOS servo drive motor connection (X5) because that would destroy the ACOPOS servo drive!**
>
> **The motor cable must be removed from the ACOPOS servo drive motor connection (X5) before measuring the insulation resistance!**

### 1.2.2 High voltage testing

In accordance with EN 60204, the electrical equipment must be able to withstand a test voltage connected between the conductors of all circuits and the protective ground conductor system for at least 1 s (exception: all circuits with a voltage < PELV voltage). The test voltage must be twice the rated voltage for the equipment and at least 1000 VAC (50/60 Hz). Components that cannot handle this test voltage must be disconnected before carrying out the high voltage test.

**ACOPOS servo drive power mains connection (X3)**

> **Warning!**
>
> **High voltage testing cannot be carried out on the ACOPOS servo drive power mains connection (X3) since arc flashes can occur that are caused by the internal wiring.**

**ACOPOS servo drive motor connection (X5)**

> **Warning!**
>
> **High voltage testing is not permitted to be carried out on the ACOPOS servo drive motor connection (X5) because it would destroy the ACOPOS servo drive!**

**B&R motors and B&R motor cables**

In principle, high voltage testing can be carried out on B&R motor cables and B&R motors. Depending on the size of the motor and length of the motor cable, increased measurement currents can occur because of capacitive coupling.

[28)] Typical values are: 8V1010/1016: 880 kΩ; 8V1022/1045/1090: 820 kΩ; 8V1180/1320: 750 kΩ; 8V1640/128M: 820 kΩ.

## Warning!

**High voltage testing is not permitted to be carried out on the ACOPOS servo drive motor connection (X5) because it would destroy the ACOPOS servo drive!**

**The motor cable must be removed from the ACOPOS servo drive motor connection (X5) before the high voltage measurement!**

### 1.3 Connecting cables to plug-in modules



Figure 90: Connecting cables to plug-in modules

## Caution!

**When installing plug-in module cables, the minimum permissible flex radius for the cables being used must be taken into consideration during cabling and also when cabling is finished! The minimum permissible flex radius can be found in the documentation for the respective cables.**

## Information:

**B&R provides holes for fastening the cables with cable ties on the bottom of the plug-in modules (see image below). This type of fastening is only permitted if the minimum permissible flex radius values for the cables being used are adhered to!**

Make sure that the ventilation slots on the bottom of the ACOPOS drive are not blocked.

## 1.4 Overview of clampable cross sections

| Con-nection | Wire types<br>Approbation data | 8V1010.0xx-2<br>8V1010.5xx-2<br>8V1016.0xx-2<br>8V1016.5xx-2 | | 8V1022.0xx-2<br>8V1045.0xx-2<br>8V1090.0xx-2 [1] | | 8V1180.0xx-2<br>8V1320.0xx-2 [2] | | 8V1640.0xx-2 [3] | | 8V128M.0xx-2 [4] | |
|---|---|---|---|---|---|---|---|---|---|---|---|
| | | [mm²] | [AWG] | [mm²] | [AWG] | [mm²] | [AWG] | [mm²] | [AWG] | [mm²] | [AWG] |
| X1 | Solid core / multiple-conductor lines | 0.5 - 1.5 | 20 - 14 | 0.5 - 1.5 | 20 - 14 | 0.5 - 1.5 | 20 - 14 | 0.5 - 1.5 | 20 - 14 | 0.5 - 1.5 | 20 - 14 |
| | Flexible and fine wire lines | | | | | | | | | | |
| | Without wire end sleeves | 0.5 - 1.5 | 20 - 14 | 0.5 - 1.5 | 20 - 14 | 0.5 - 1.5 | 20 - 14 | 0.5 - 1.5 | 20 - 14 | 0.5 - 1.5 | 20 - 14 |
| | With wire end sleeves | 0.5 - 1.5 | 20 - 14 | 0.5 - 1.5 | 20 - 14 | 0.5 - 1.5 | 20 - 14 | 0.5 - 1.5 | 20 - 14 | 0.5 - 1.5 | 20 - 14 |
| | Approbation data | | | | | | | | | | |
| | UL/C-UL-US | --- | 26 - 14 | --- | 26 - 14 | --- | 26 - 14 | --- | 26 - 14 | --- | 26 - 14 |
| | CSA | --- | 26 - 14 | --- | 26 - 14 | --- | 26 - 14 | --- | 26 - 14 | --- | 26 - 14 |
| Tightening torque for the terminal screws [Nm] | | 0.2 ... 0.25 | | 0.2 ... 0.25 | | 0.2 ... 0.25 | | 0.2 ... 0.25 | | 0.2 ... 0.25 | |
| X2 DC bus | Solid core / multiple-conductor lines | 0.2 - 4 | 24 - 10 | 0.2 - 4 | 24 - 10 | 0.5 - 10 | 20 - 7 | 10 - 50 | 7 - 0 | 16 - 95 | 6 - 3/0 |
| | Flexible and fine wire lines | | | | | | | | | | |
| | Without wire end sleeves | 0.2 - 4 | 24 - 10 | 0.2 - 4 | 24 - 10 | 0.5 - 6 | 20 - 9 | 10 - 35 | 7 - 2 | 10 - 70 | 7 - 2/0 |
| | With wire end sleeves | 0.25 - 4 | 23 - 10 | 0.25 - 4 | 23 - 10 | 0.5 - 6 | 20 - 9 | 10 - 35 | 7 - 2 | 10 - 70 | 7 - 2/0 |
| | Approbation data | | | | | | | | | | |
| | UL/C-UL-US | --- | 30 - 10 | --- | 30 - 10 | --- | 20 - 8 | --- | 10 - 2 | --- | 6 - 2/0 |
| | CSA | --- | 28 - 10 | --- | 28 - 10 | --- | 20 - 8 | --- | 12 - 2 | --- | 6 - 2/0 |
| Tightening torque for the terminal screws [Nm] | | 0.5 ... 0.6 | | 0.5 ... 0.6 | | 1.2 ... 1.5 | | 3 ... 4 | | 6 ... 10 | |
| X3 Mains | Solid core / multiple-conductor lines | 0.2 - 4 | 24 - 10 | 0.2 - 4 | 24 - 10 | 0.5 - 10 | 20 - 7 | 10 - 50 | 7 - 0 | 16 - 95 | 6 - 3/0 |
| | Flexible and fine wire lines | | | | | | | | | | |
| | Without wire end sleeves | 0.2 - 4 | 24 - 10 | 0.2 - 4 | 24 - 10 | 0.5 - 6 | 20 - 9 | 10 - 35 | 7 - 2 | 10 - 70 | 7 - 2/0 |
| | With wire end sleeves | 0.25 - 4 | 23 - 10 | 0.25 - 4 | 23 - 10 | 0.5 - 6 | 20 - 9 | 10 - 35 | 7 - 2 | 10 - 70 | 7 - 2/0 |
| | Approbation data | | | | | | | | | | |
| | UL/C-UL-US | --- | 30 - 10 | --- | 30 - 10 | --- | 20 - 8 | --- | 10 - 2 | --- | 6 - 2/0 |
| | CSA | --- | 28 - 10 | --- | 28 - 10 | --- | 20 - 8 | --- | 12 - 2 | --- | 6 - 2/0 |
| Tightening torque for the terminal screws [Nm] | | 0.5 ... 0.6 | | 0.5 ... 0.6 | | 1.2 ... 1.5 | | 3 ... 4 | | 6 ... 10 | |
| X4a, X4b Motor (holding brake, temperature sensor) | Solid core / multiple-conductor lines | 0.2 - 2.5 | 24 - 12 | 0.2 - 2.5 | 24 - 12 | 0.2 - 2.5 | 24 - 12 | 0.2 - 2.5 | 24 - 12 | 0.2 - 2.5 | 24 - 12 |
| | Flexible and fine wire lines | | | | | | | | | | |
| | Without wire end sleeves | 0.2 - 2.5 | 24 - 12 | 0.2 - 2.5 | 24 - 12 | 0.2 - 2.5 | 24 - 12 | 0.2 - 2.5 | 24 - 12 | 0.2 - 2.5 | 24 - 12 |
| | With wire end sleeves | 0.25 - 2.5 | 23 - 12 | 0.25 - 2.5 | 23 - 12 | 0.25 - 2.5 | 23 - 12 | 0.25 - 2.5 | 23 - 12 | 0.25 - 2.5 | 23 - 12 |
| | Approbation data | | | | | | | | | | |
| | UL/C-UL-US | --- | 30 - 12 | --- | 30 - 12 | --- | 30 - 12 | --- | 30 - 12 | --- | 30 - 12 |
| | CSA | --- | 28 - 12 | --- | 28 - 12 | --- | 28 - 12 | --- | 28 - 12 | --- | 28 - 12 |
| Tightening torque for the terminal screws [Nm] | | 0.5 ... 0.6 | | 0.5 ... 0.6 | | 0.5 ... 0.6 | | 0.5 ... 0.6 | | 0.5 ... 0.6 | |
| X5 Motor (power) | Solid core / multiple-conductor lines | 0.2 - 4 | 24 - 10 | 0.2 - 4 | 24 - 10 | 0.5 - 10 | 20 - 7 | 10 - 50 | 7 - 0 | 16 - 95 | 6 - 3/0 |
| | Flexible and fine wire lines | | | | | | | | | | |
| | Without wire end sleeves | 0.2 - 4 | 24 - 10 | 0.2 - 4 | 24 - 10 | 0.5 - 6 | 20 - 9 | 10 - 35 | 7 - 2 | 10 - 70 | 7 - 2/0 |
| | With wire end sleeves | 0.25 - 4 | 23 - 10 | 0.25 - 4 | 23 - 10 | 0.5 - 6 | 20 - 9 | 10 - 35 | 7 - 2 | 10 - 70 | 7 - 2/0 |
| | Approbation data | | | | | | | | | | |
| | UL/C-UL-US | --- | 30 - 10 | --- | 30 - 10 | --- | 20 - 8 | --- | 10 - 2 | --- | 6 - 2/0 |
| | CSA | --- | 28 - 10 | --- | 28 - 10 | --- | 20 - 8 | --- | 10 - 2 | --- | 6 - 2/0 |
| Tightening torque for the terminal screws [Nm] | | 0.5 ... 0.6 | | 0.5 ... 0.6 | | 1.2 ... 1.5 | | 3 ... 4 | | 6 ... 10 | |
| X6 External braking resistor | Solid core / multiple-conductor lines | --- | --- | --- | --- | 0.2 - 4 | 24 - 10 | 0.5 - 10 | 20 - 7 | 0.5 - 10 | 20 - 7 |
| | Flexible and fine wire lines | | | | | | | | | | |
| | Without wire end sleeves | --- | --- | --- | --- | 0.2 - 4 | 24 - 10 | 0.5 - 6 | 20 - 9 | 0.5 - 6 | 20 - 9 |
| | With wire end sleeves | --- | --- | --- | --- | 0.25 - 4 | 23 - 10 | 0.5 - 6 | 20 - 9 | 0.5 - 6 | 20 - 9 |
| | Approbation data | | | | | | | | | | |
| | UL/C-UL-US | --- | --- | --- | --- | --- | 30 - 10 | --- | 20 - 8 | --- | 20 - 8 |
| | CSA | --- | --- | --- | --- | --- | 28 - 10 | --- | 20 - 8 | --- | 20 - 8 |
| Tightening torque for the terminal screws [Nm] | | --- | | --- | | 0.5 ... 0.6 | | 1.2 ... 1.5 | | 1.2 ... 1.5 | |

Table 198: Terminal cross sections for ACOPOS servo drives

1) Starting with revision I0.
2) Starting with revision F0.
3) Starting with revision K0.
4) Starting with revision C0.

# Chapter 6 • Safety technology

## 1 Standard safety technology ("hardwired safety technology")

### Danger!

**Especially in the area of safety technology, always consult the latest version of this document on the B&R website for valid specifications (www.br-automation.com)! The specifications in this version of the document are not necessarily current. The user must verify the correctness of specifications before implementing safety functions!**

### 1.1 General information

ACOPOS servo drives use integrated safe pulse disabling for secure shutdown and to prevent unwanted startup. This is designed to meet the following safety classifications depending on the external circuit: [29)]

| Criteria | Safety characteristic |
|---|---|
| Maximum safety category per EN ISO 13849 | CAT 3 |
| Maximum Performance Level in accordance with EN ISO 13849 | PL d |
| Maximum Safety Integrity Level in accordance with IEC 62061 | SIL 2 |
| Maximum Safety Integrity Level in accordance with IEC 61508 | SIL 2 |
| PFH (probability of dangerous failure per hour) | $<4 * 10^{-9}$ |
| PFD (probability of dangerous failure on demand) | $<4 * 10^{-4}$ with a proof test interval of 10 years<br>$<7 * 10^{-4}$ with a proof test interval of 20 years |
| PTI (proof test interval) [1)] | Max. 20 years |
| DC (diagnostic coverage) | 99% |
| MTTFd (mean time to dangerous failure) | >140 years |

Table 199: Safety classifications, criteria and characteristics for safe pulse disabling

1) Corresponds to the mission time of the module

The following table provides an overview of the individual safety functions that can be implemented:

| Name according to standard | | Short description |
|---|---|---|
| EN 61800-5-2 | EN 60204-1 | |
| STO (Safe Torque Off) | Stop category 0 | Cuts off the power supply |
| SS1 (Safe Stop 1) | Stop category 1 | Initiates active braking and activates function STO after a defined amount of time has passed |
| SS2 (Safe Stop 2) | Stop category 2 | Initiates active braking and activates function SOS after a defined amount of time has passed |
| SLS (Safely Limited Speed) | --- | Protection against exceeding a defined speed limit |
| SOS (Safe Operating Stop) | --- | Protection against impermissible position deviation |

Table 200: Overview of safety functions according to standards

Safe pulse disabling interrupts the power supply to the motor by preventing the pulses to the IGBTs over one channel. In this way, a rotating field can no longer be created in synchronous and induction motors controlled by ACOPOS servo drives.

Integrated safe pulse disabling therefore meets the requirements for preventing unexpected startup in accordance with EN 1037 as well as the requirements concerning Category 0 and 1 stop functions in accordance with EN 60204-1. Both stop functions require the power supply to the machine actuators to be switched off (immediately for Category 0 and after reaching standstill for Category 1). The requirements concerning the STO, SS1, SS2, SLS and SOS safety functions are also met in accordance with EN 61800-5-2.

The terminology of EN 61800-5-2 (STO, SS1, SS2, SLS, SOS) will be used in the following.

### Danger!

**If the safety functions integrated in the drive system are used in an application, then they must be fully validated before the drive system is switched on for the first time. This could lead to death, severe injury or damage to property.**



[29)] A detailed explanation of the standards and safety functions can be found in the section "Standards and Certifications".

## 1.2 Principle - Implementing the safety function

Safe pulse disabling is achieved by removing the IGBT driver supply from the ACOPOS servo drives. Terminals X1 / Enable and X1 / COM (8, 9) are used to supply an integrated DC-to-DC converter with 24 VDC. The converter creates the supply voltage for the IGBT driver from this voltage.

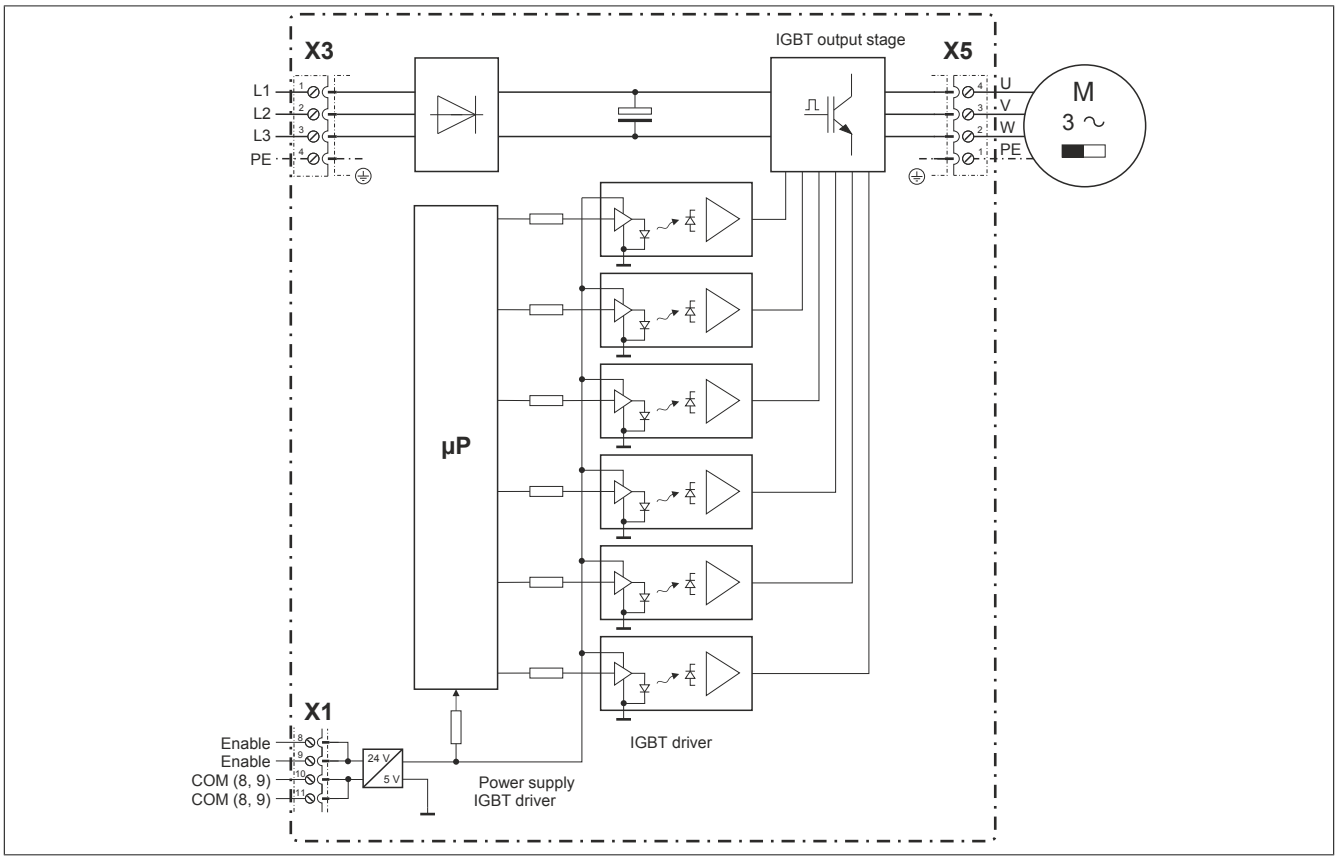


Figure 91: Block diagram of safe pulse disabling

If the 24 VDC voltage supply for the DC-to-DC converter is interrupted, the IGBT drivers are also no longer supplied. It is then no longer possible to transfer the modulation pattern needed to generate the rotating field on the IGBT output stage. This cuts off the supply of power to the motor.

### 1.2.1 Additional function

The availability of the DC-to-DC converter's output voltage is queries by the microprocessor. If voltage is not present on the output of the DC-to-DC converter, then the microprocessor suppresses generation of the modulation pattern.

## Danger!

**After activating safe pulse disabling using terminals X1 / Enable and X1/COM (8, 9), the motor is de-energized and therefore torque-free. If the motor was moving before activation of safe pulse disabling, it is only stopped by a safe operational brake (available under certain conditions) or from the friction of the entire system. The motor is therefore not able to hold hanging loads. Holding brakes must be used for this purpose.**

**For applications where this can be dangerous, the desired level of protection cannot be achieved.**

## Danger!

**The switch-off time for the enable input must be taken into consideration since it has a substantial effect on the response time of the safety functions and therefore the remaining distances and times to be considered. In order to calculate the total safety response time, the user must validate the lag time throughout the entire system.**

**The switch-off times for the enable input can be found in the technical data for the respective ACOPOS servo drive.**

## Danger!

**Activating safe pulse disabling via the terminals X1 / Enable1 and X1/COM (8, 9) is not sufficient for achieving a voltage-free drive and therefore does not provide sufficient protection against electrical shock!**

## Danger!

**Depending on the application, it is possible for the drive to restart after safe pulse disabling is deactivated.**

## Danger!

**The brake controller integrated in ACOPOS servo drives and the holding brake integrated in B&R standard motors fulfill the criteria up to Category B in accordance with EN ISO 13849-1.**

**Additional measures are necessary to achieve higher safety categories.**

## Danger!

**The C standards relevant to applications must be observed!**

## Information:

**It is important to note that multiple errors in the IGBT bridge can cause a brief forward movement. The maximum angle of rotation $\varphi$ of the motor shaft during this forward movement depends on the motor being used. For permanent magnet synchronous motors, $\varphi = 360°/2p$ (for B&R standard motors, p=3 so the angle is 60°). For three-phase induction motors, there is a relatively small angle of rotation between 5° and 15°.**

**This short forward movement can be excluded as a fault per EN ISO 13849-1, among other things due to the improbability that this would occur and due to general technical experience.**

## 1.3 Enable input connected in accordance with Safety Category 3 / SIL 2 / PL d

Using the example of the STO safety function, different circuit variations for the enable input on the ACOPOS servo drives are given here with regard to the required Safety Category / SIL / PL.

### Danger!

**Any faults (e.g. cross faults) that are not detected can lead to the loss of safety functionality.**

**Appropriate measures must be taken to justify the exclusion of faults. For instance, faults caused by a short circuit between any two wires can be excluded per EN ISO 13849-2, appendix D.5, if one of the following conditions is met:**

- **The wires are permanently installed and protected against external damage (e.g. using a cable duct or armored conduit).**
- **The wires are installed in different plastic-sheathed cables or within an area for electrical equipment[30)].**
- **The wires are each individually protected by a ground connection.**

**For more fault exclusions, see EN ISO 13849-2, appendix D.5.**

### Danger!

**To achieve Safety Category 3 / SIL 2 / PL d, it must be ensured that a single error does not lead to a loss of safety functionality.**

### 1.3.1 STO, Category 3 / SIL 2 / PL d (Variant A)

The input X1 / Enable and X1 / COM (8, 9) of the ACOPOS servo drive are supplied via a safe digital output (Out1+, Out1-). If the safety function is requested, then the safe digital output separates input X1 / Enable and X1 / COM (8, 9).

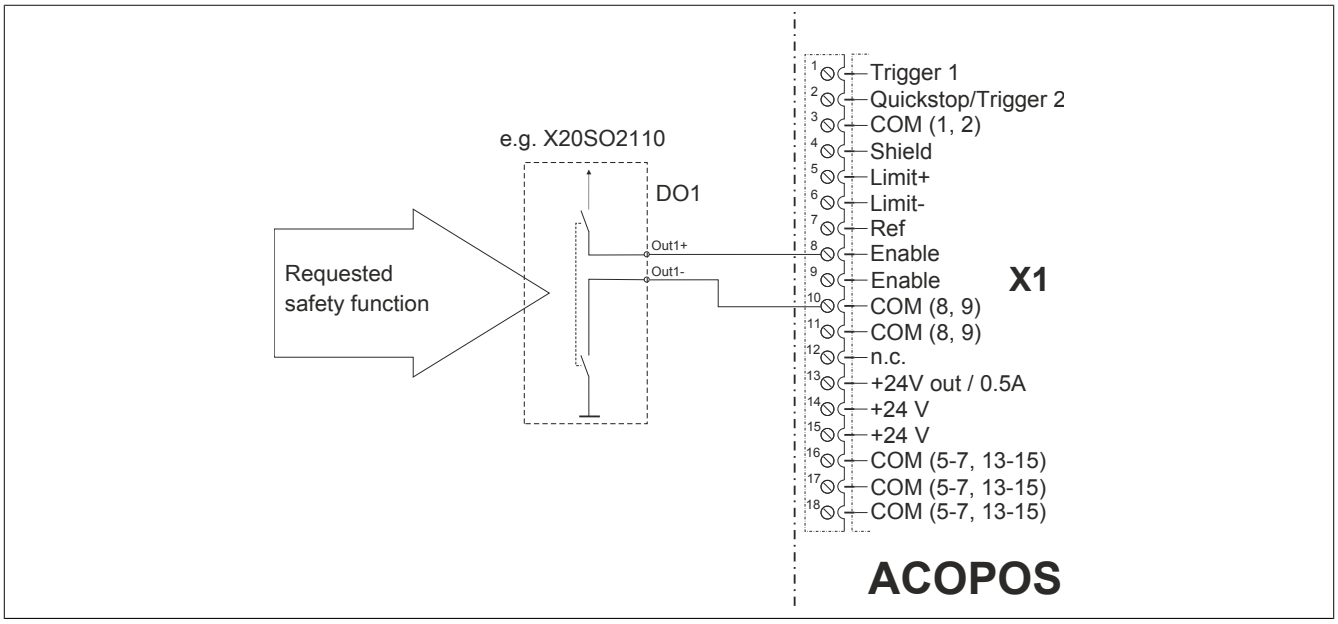


Figure 92: STO, category 3 / SIL 2 / PL d (variant A)

### Danger!

**At least one safe digital output module with Category 3 / SIL 2 / PL d must be used for the DO1 digital output shown.**

**The guidelines listed in the safe digital output module's user documentation must be observed!**

**Test signals on the safe digital output module must be turned off.**

[30)] Prerequisite: Both the wires and the area for electrical equipment must meet the respective requirements (see IEC 60204-1).

### 1.3.2 STO, Category 3 / SIL 2 / PL d (Variant B)

When an E-stop button is pressed, the enable input on the ACOPOS servo drive is cut off from the +24 V supply by a switch, thereby cutting off the motor's power supply.

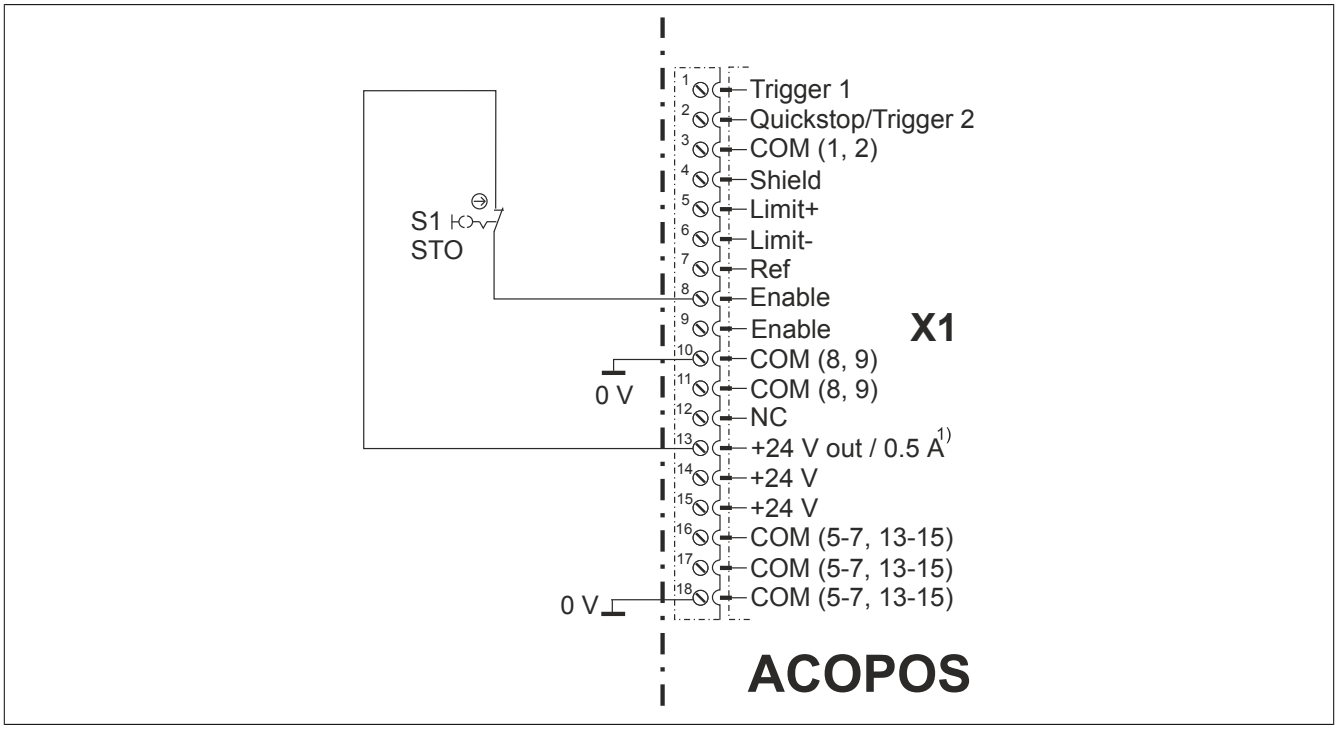


Figure 93: STO, Category 3 / SIL 2 / PL d (Variant B)

1) For servo drives which have no 24 VDC output (ACOPOS 1010/1016/1022/1045/1090), the control voltage must be provided externally.

## Danger!

**A 1-pole category 3 / SIL 2 / PL d switching device with a positively driven normally closed contact must be used for the shown S1 switch per EN 60947-5-1.**

**The information in the user documentation for the switching device must be observed!**

## 1.4 Enable input circuits in accordance with Safety Category 3 / SIL 2 / PL d and functionality (STO, SS1, SS2, SLS, SOS)

The following image illustrates example wiring suggestions for the external wiring of the enable input on ACOPOS servo drives. They vary in their safety classification in accordance with EN 60204-1, ISO 13849 and EN 61800-5-2 as well as with regard to the safety function (STO, SS1, SS2, SLS, SOS).

### 1.4.1 STO, SLS, SOS - Safety Category 3 / SIL 2 / PL d

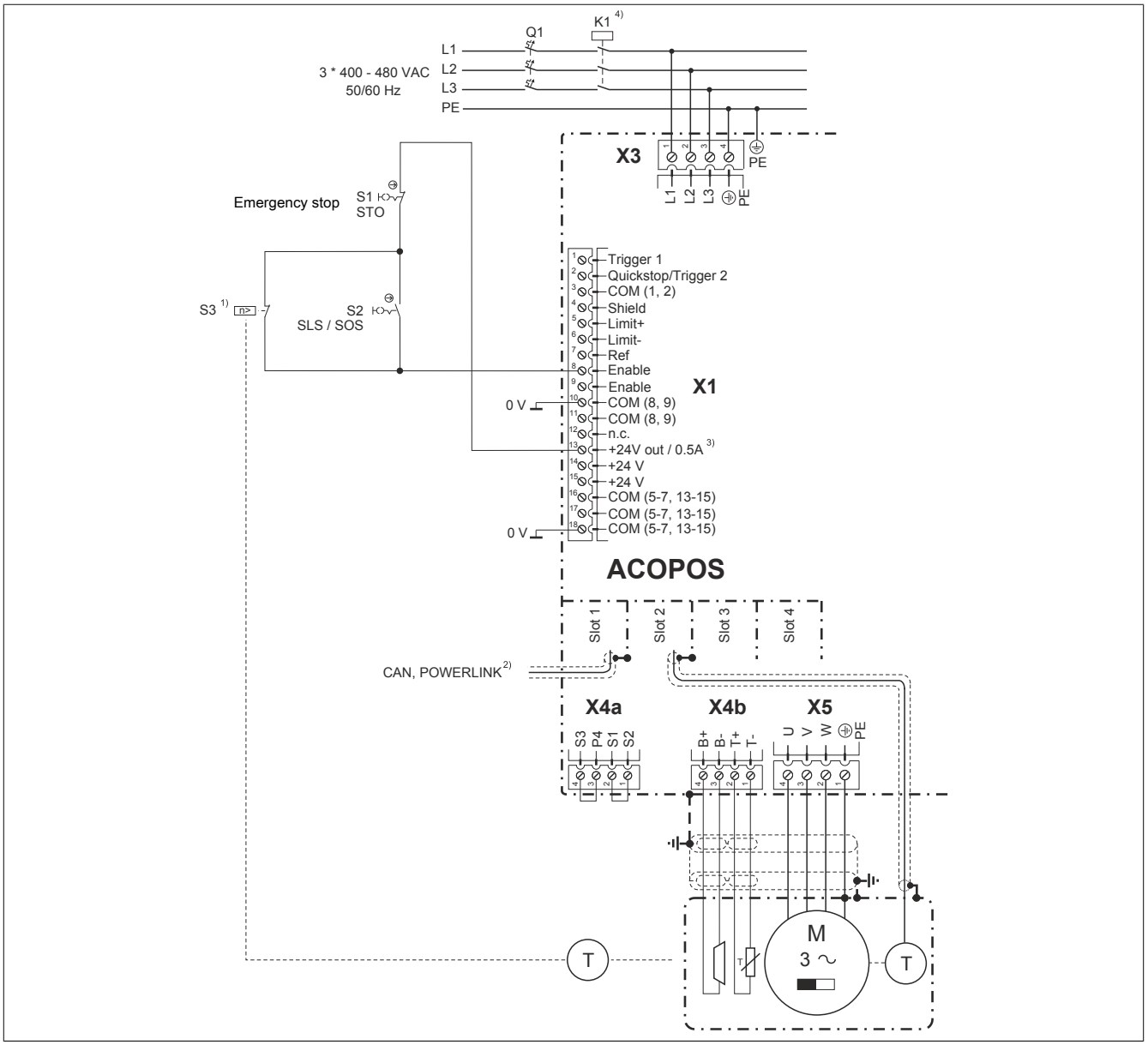


Figure 94: STO, SLS, SOS - Safety Category 3 / SIL 2 / PL d

1) S3 limit speed according to the application requirements.
S3 including the encoder is part of the safety function.
Implementation of S3 including the encoder must therefore meet Category 3 / SIL 2 / PL d.
2) The network connection is used for diagnostics and setting parameters.
3) For servo drives which have no 24 VDC output (ACOPOS 1010/1016/1022/1045/1090), the control voltage must be provided externally.
4) The K1 line contactor is not required for the safety function.

## Danger!

**The brake shown in this image as well as the brake control from the ACOPOS servo drive are not included in the safety function!**

**Description:**

**STO**

When the S1 E-stop button is pressed, the enable input on the ACOPOS servo drive is de-energized. As a result, the supply of power to the motor is cut off.

This ensures that the supply of power to the motor is always cut off immediately.

**Secure restart interlock**

Opening and latching emergency stop switch S1 prevents unexpected startup.

**SLS**

Opening the S2 switch activates the SLS safety function. The switching contact of the S3 overspeed monitor is opened if the monitor's configured speed limit is exceeded. This de-energizes the enable input of the ACOPOS servo drive. As a result, the supply of power to the motor is cut off.

This ensures that the supply of power to the motor is always cut off immediately when the speed limit set on the S3 overspeed monitor is exceeded.

**SOS**

Opening the S2 switch activates the SOS safety function. The switching contact of the overspeed monitor is opened when the S3 standstill monitor is activated. This de-energizes the enable input of the ACOPOS servo drive. As a result, the supply of power to the motor is cut off.

This ensures that the supply of power to the motor is always cut off immediately when the S3 standstill monitor is activated.

## Information:

**The SLS or SOS safety function can be implemented depending on the function of the S3 switching device (overspeed monitor or standstill monitor).**

## Danger!

**1-pole category 3 / SIL 2 / PL d switching devices with a positively driven normally closed contact must be used for the shown S1 and S2 switches per EN 60947-5-1. A 1-pole category 3 / SIL 2 / PL d switching device must be used for the shown S3 switching device.**

**The information in the user documentation for the switching device must be observed!**





Provided by Industrial Automation Co. • www.industrialautomationco.com • Parts & Repair: 877-727-8757

### 1.4.2 SS1, SLS, SS2 - Safety Category 3 / SIL 2 / PL d (Variant A)

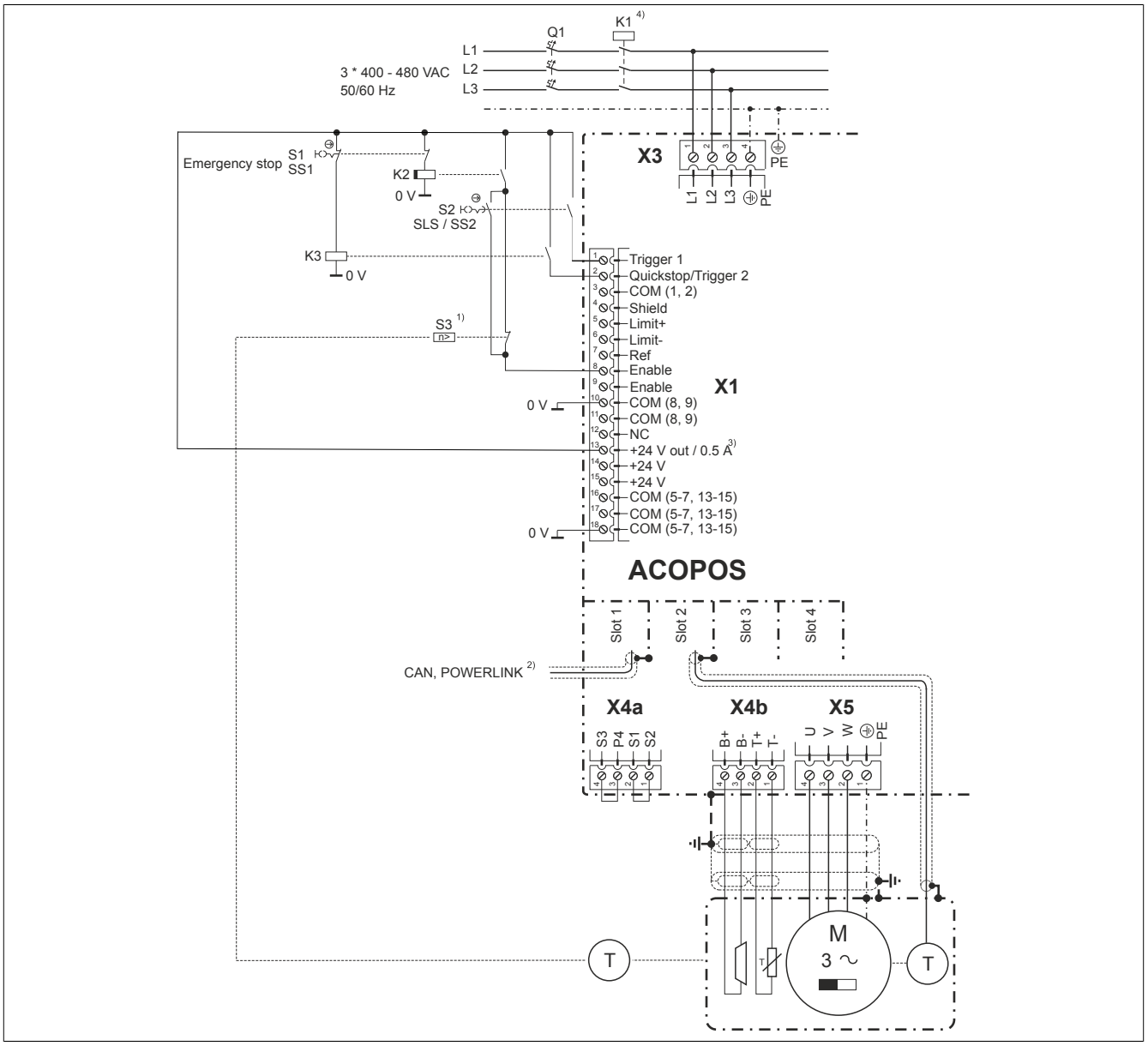


Figure 95: SS1, SLS, SS2 - Safety Category 3 / SIL 2 / PL d (Variant A)

1) Limit speed of S3 according to the requirements of the application. S3 including the encoder is part of the safety function. Implementation of S3 including the encoder must therefore meet Category 3 / SIL 2 / PL d.
2) The network connection is used for diagnostics and configuration.
3) For servo drives without 24 VDC output (ACOPOS 1010/1016/1022/1045/1090), the control voltage must be provided externally.
4) Line contactor K1 is not required for the safety function.

## Danger!

**The brake shown in this image as well as the brake control from the ACOPOS servo drive are not included in the safety function!**

## Information:

**For this circuit, the input X1 / Quickstop / Trigger 2 of the ACOPOS servo drive must be configured as a quickstop for this connection.**

**Description:**

**SS1**

Pressing the S1 E-stop button de-energizes the K3 relay. As a result, an active braking procedure is triggered via the X1 / Quickstop / Trigger2 input of the ACOPOS servo drive.

The K2 auxiliary drop-out delay relay is de-energized after a defined amount of time. This de-energizes the enable input of the ACOPOS servo drive. As a result, the supply of power to the motor is cut off.

This ensures that the supply of power to the motor is always cut off after a defined amount of time.

**Secure restart interlock**

Opening and latching emergency stop switch S1 prevents unexpected startup.

**SLS**

When the S2 switch is opened, the SLS safety function is activated and triggers an active braking procedure via the X1 / Trigger1 input on the ACOPOS servo drive. After a defined amount of time, speed monitoring is activated on the S3 overspeed monitor. If the defined limit speed is exceeded, then the enable input of the ACOPOS servo drive is de-energized via the switching contact of the S3 overspeed monitor. As a result, the supply of power to the motor is cut off.

This ensures that the supply of power to the motor is always cut off immediately when the speed limit set on the S3 overspeed monitor is exceeded.

**SS2**

When the S2 switch is opened, the SS2 safety function is activated and triggers an active braking procedure via the X1 / Trigger1 input on the ACOPOS servo drive. After a defined amount of time, standstill monitoring is activated on the S3 standstill monitor. If the defined tolerance limit is exceeded (standstill monitor S3 is activated), then the enable input of the ACOPOS servo drive is cleared via the switching contact of the standstill monitor S3. As a result, the supply of power to the motor is cut off.

This ensures that the supply of power to the motor is always cut off immediately when the S3 standstill monitor is activated.

## Information:

**Either the SLS or the SS2 safety function can be implemented depending on the function of the S3 switching device (overspeed monitor or standstill monitor).**

## Danger!

**The S1 and S2 switches shown require the use of one-pin Category 3 / SIL 2 / PL d switching devices with a positively-driven NC contact in accordance with EN 60947-5-1. A one-pin Category 3 / SIL 2 / PL d switching device must be used for the K2 relay shown as well as the S3 switching device.**

**The instructions in the switching device's user documentation must be observed!**





Provided by Industrial Automation Co. • www.industrialautomationco.com • Parts & Repair: 877-727-8757

### 1.4.3 SS1, SLS, SS2 - Safety Category 3 / SIL 2 / PL d (Variant B)

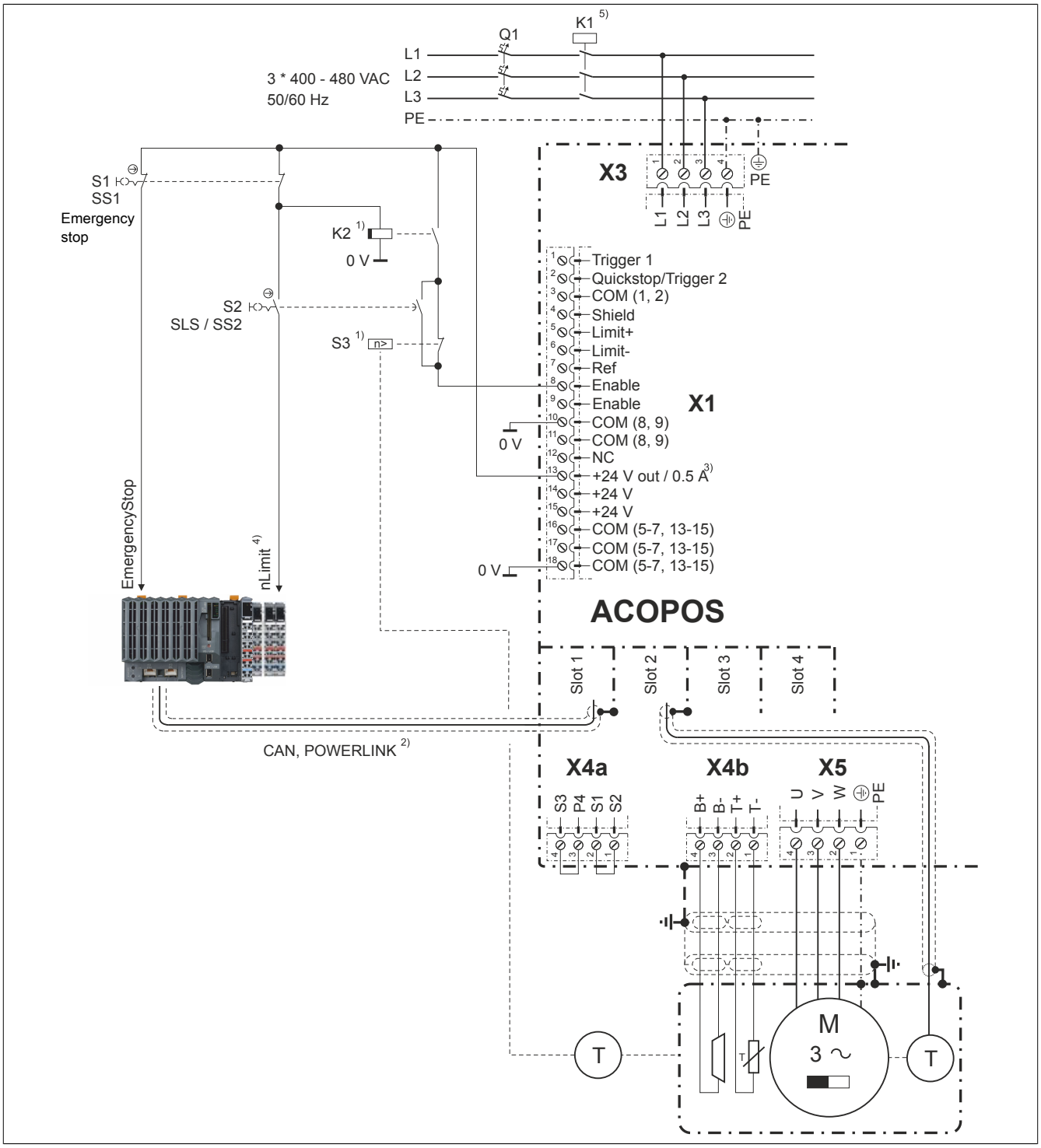


Figure 96: SS1, SLS, SS2 - Safety Category 3 / SIL 2 / PL d (Variant B)

1) K2 dropout delay and S3 limit speed according to the application requirements.
The K2 auxiliary drop-out delay relay and the S3 (including the encoder) are part of the safety function. The implementation of K2 and S3 including the encoder must therefore meet the requirements of Category 3 / SIL 2 / PL d.
2) The network connection is used to transfer the interruption command for active braking, diagnostics and setting parameters.
3) For servo drives which have no 24 VDC output (ACOPOS 1010/1016/1022/1045/1090), the control voltage must be provided externally.
4) Information about the status of the "EmergencyStop" digital input is also contained in the status of the "nLimit" digital input.
5) The K1 line contactor is not required for the safety function.

## Danger!

**The brake shown in this image as well as brake control from the ACOPOS servo drive are not included in the safety function!**

**Description:**

**SS1**

Activating emergency switch-off S1 triggers an active braking procedure via digital input "EmergencyStop" on the controller (see "Code example" on page 278).

The K2 auxiliary drop-out delay relay is de-energized after a defined amount of time. This de-energizes the enable input of the ACOPOS servo drive. As a result, the supply of power to the motor is cut off.

This ensures that the supply of power to the motor is always cut off after a defined amount of time.

**Secure restart interlock**

Opening and latching emergency stop switch S1 prevents unexpected startup.

**SLS**

Opening switch S2 activates safety function SLS and triggers an active braking procedure via digital input "nLimit" on the controller (see "Code example" on page 278). After a defined amount of time, speed monitoring is activated on overspeed monitor S3. If the configured speed limit is exceeded, the enable input of the ACOPOS servo drive is cut off via the switching contact of overspeed monitor S3. The supply of power to the motor is cut off as a result.

This ensures that the supply of power to the motor is always cut off immediately when the speed limit set on the S3 overspeed monitor is exceeded.

**SS2**

Opening switch S2 activates safety function SS2 and triggers an active braking procedure via digital input "nLimit" on the controller (see "Code example" on page 278). After a defined amount of time, standstill monitoring is activated on standstill monitor S3. If the configured tolerance limit is exceeded (standstill monitor S3 is activated), the enable input of the ACOPOS servo drive is cut off via the switching contact of standstill monitor S3. The supply of power to the motor is cut off as a result.

This ensures that the supply of power to the motor is always cut off immediately when the S3 standstill monitor is activated.

## Information:

**Either the SLS or the SS2 safety function can be implemented depending on the function of the S3 switching device (overspeed monitor or standstill monitor).**

## Danger!

**The S1 and S2 switches shown require the use of two or one-pin switching devices (Category 3 / SIL 2 / PL d) with a positively driven NC contact in accordance with EN 60947-5-1. A one-pin Category 3 / SIL 2 / PL d switching device must be used for the K2 relay shown as well as the S3 switching device.**

**The instructions in the switching device's user documentation must be observed!**





Provided by Industrial Automation Co. • www.industrialautomationco.com • Parts & Repair: 877-727-8757

### Code example

Issuing the stop command via POWERLINK:

```
if ( ! statStopActive )
{
    /* Move stop not active: check move stop inputs */
    if ( DI_EmergencyStop == INPUT_LEVEL_LOW )
    {
        /* Move stop with emergency stop deceleration */
        MC_Stop_0.Deceleration = E_STOP_DECELERATION;
        MC_Stop_0.Execute = 1;
        statStopActive = 1;
    }
    else if ( cmdStopAxis1 )
    {
        /* Move stop with application deceleration */
        MC_Stop_0.Deceleration = APPLICATION_DECELERATION;
        MC_Stop_0.Execute = 1;
        statStopActive = 1;
    }
}
else
{
    /* Move stop is active, wait until it is finished */
    if ( DI_EmergencyStop == INPUT_LEVEL_HIGH &&
        cmdStopAxis1 == 0 &&
        MC_Stop_0.Done == 1 )
    {
        /* Move stop complete */
        MC_Stop_0.Execute = 0;
        statStopActive = 0;
    }
}
...
MC_Stop_0.Axis = AxisRef1;
MC_Stop( &MC_Stop_0 );
...
```

# Chapter 7 • International and national certifications

Products and services from B&R comply with applicable standards. This includes international standards from organizations such as ISO, IEC and CENELEC, as well as national standards from organizations such as UL, CSA, DNV GL, etc. We are committed to ensuring the reliability of our products in an industrial environment.

## Information:

**Certifications that apply to a particular module are available at the following places:**

- **The data sheet's technical data under "General information → Certifications"**
- **At www.br-automation.com under "Products" in the "General information → Certifications" area of the technical data**
- **On the side of the module housing**

## 1 Marks

| Mark | Explanation | Region |
|---|---|---|
| CE | CE marking | Europe (EU) |
| c UL us LISTED | Underwriters Laboratories Inc. (UL) | Canada<br>USA |
| EAC | Eurasian Conformity (EAC) | Eurasian<br>Economic Union |
| KC | Korean Conformity (KC) | Korea |

# 2 EU directives and standards (CE)

**CE marking**

**Europe (EU)**

The respective product complies with all applicable EU directives and relevant harmonized standards.

Certification of these products is performed in cooperation with accredited testing laboratories.

### EMC Directive 2014/30/EU

All devices satisfy the protection requirements of the "EMC Directive" and are designed for industrial use.

Applicable standards from this directive:

| | |
|---|---|
| EN 61800-3 | Adjustable speed electrical power drive systems<br>- Part 3: EMC requirements and specific test methods |

### Low Voltage Directive 2014/35/EU

The low voltage directive applies to electrical equipment with a nominal voltage from 50 to 1000 VAC and from 75 to 1500 VDC.
All devices within the area of application of this directive satisfy the its protection requirements.

Applicable standard from this directive:

| | |
|---|---|
| EN 61800-5-1 | Adjustable speed electrical power drive systems<br>- Part 5-1: Safety requirements - Electrical, thermal and energy |

The corresponding declaration of conformity is available for download from the B&R website. For information about the versions of applicable standards, see the declaration of conformity.

**Declaration of conformity**

Website > Downloads > Certificates > Declarations of conformity > Declaration Servos ACOPOS

## Machinery directive 2006/42/EC

| Standard safety technology | |
|---|---|
| No mark | In accordance with the machinery directive, safety technology products are designed, developed, tested and labeled for special applications providing protection to machinery and personnel.<br><br>Certification of these products is performed exclusively in cooperation with EU-authorized bodies (Notified Bodies). |

### Europe (EU)

Applicable standards from this directive:

| | |
|---|---|
| IEC 61508-1 | Functional safety of electrical / electronic / programmable electronic safety-related systems<br>- Part 1: General requirements |
| IEC 61508-2 | Functional safety of electrical / electronic / programmable electronic safety-related systems<br>- Part 2: Requirements for electrical/electronic/programmable electronic safety-related systems |
| IEC 61508-3 | Functional safety of electrical / electronic / programmable electronic safety-related systems<br>- Part 3: Software requirements |
| IEC 61508-4 | Functional safety of electrical / electronic / programmable electronic safety-related systems<br>- Part 4: Definitions and abbreviations |
| EN 62061 | Safety of machinery - Functional safety of safety-related electrical, electronic and programmable electronic control systems |
| EN ISO 13849-1 | Safety of machinery - Safety-related parts of control systems<br>- Part 1: General principles for design |

Declarations of conformity, certificates and any other safety-related documentation can be downloaded from the B&R website. For information about the versions of applicable standards, see the declaration of conformity.

**Declaration of conformity**

Website > Downloads > Certificates > Declarations of conformity > Declaration FS Servos ACOPOS

**Certificates**

Website > Downloads > Certificates > Safety technology > ACOPOS > TÜV certificate - Function "Safe pulse disabling" for ACOPOS





Provided by Industrial Automation Co. • www.industrialautomationco.com • Parts & Repair: 877-727-8757

## 2.1 Overview of standards

The following overview contains standards that are partially or completely taken into account for product certification.

| Standard | Description |
|---|---|
| EN ISO 13849-1 | Safety of machinery - Safety-related parts of control systems<br>- Part 1: General principles for design |
| EN ISO 4180 | Packaging - Complete, filled transport packages - General rules for the compilation of performance test schedules |
| EN 55011<br>(CISPR 11) | Industrial, scientific and medical equipment - Radio frequency disturbance characteristics - Limits and methods of measurement |
| EN 60068-2-6 | Environmental testing<br>- Part 2-6: Procedures - Test Fc: Vibration (sinusoidal) |
| EN 60068-2-31[1)] | Environmental testing<br>- Part 2-31: Tests - Test Ec: Rough handling shocks, primarily for equipment-type specimens |
| EN 60146-1-1 | Semiconductor power converters - General requirements and line-commutated converters<br>- Part 1-1: Specification of basic requirements |
| EN 60529 | Degrees of protection provided by enclosures (IP code) |
| EN 60721-3-1 | Classification of environmental conditions<br>- Part 3-1: Classification of groups of environmental parameters and their severities - Section 1: Storage |
| EN 60721-3-2 | Classification of environmental conditions<br>- Part 3: Classification of groups of environmental parameters and their severities - Section 2: Transport and handling |
| EN 60721-3-3 | Classification of environmental conditions<br>- Part 3: Classification of groups of environmental parameters and their severities - Section 3: Stationary use at weather-protected locations |
| EN 61000-2-4 | Electromagnetic compatibility (EMC)<br>- Part 2-4: Environmental conditions - Compatibility levels in industrial plants for low-frequency conducted disturbances |
| EN 61000-4-2 | Electromagnetic compatibility (EMC)<br>- Part 4-2: Testing and measurement techniques - Electrostatic discharge immunity test |
| EN 61000-4-3 | Electromagnetic compatibility (EMC)<br>- Part 4-3: Testing and measurement techniques - Radiated, radio-frequency, electromagnetic field immunity test |
| EN 61000-4-4 | Electromagnetic compatibility (EMC)<br>- Part 4-4: Testing and measurement techniques - Electrical fast transient/burst immunity test |
| EN 61000-4-5 | Electromagnetic compatibility (EMC)<br>- Part 4-5: Testing and measuring techniques - Surge immunity test |
| EN 61000-4-6 | Electromagnetic compatibility (EMC)<br>- Part 4-6: Testing and measurement techniques - Immunity to conducted disturbances, induced by radio-frequency fields |
| EN 61000-4-8 | Electromagnetic compatibility (EMC)<br>- Part 4-8: Testing and measuring techniques - Power frequency magnetic field immunity test |
| EN 61000-4-11 | Electromagnetic compatibility (EMC)<br>- Part 4-11: Testing and measurement techniques - Voltage dips, short interruptions and voltage variations immunity tests |
| EN 61000-4-29 | Electromagnetic compatibility (EMC)<br>- Part 4-29: Testing and measurement techniques - Voltage dips, short interruptions and voltage variations on DC input power port immunity tests |
| EN 61000-4-34 | Electromagnetic compatibility (EMC)<br>- Part 4-34: Testing and measurement techniques - Voltage dips, short interruptions and voltage variations immunity tests for equipment with input current more than 16 A per phase |
| EN 61000-6-2 | Electromagnetic compatibility (EMC)<br>- Part 6-2: Generic standards - Immunity standard for industrial environments |
| IEC 61508-1 | Functional safety of electrical / electronic / programmable electronic safety-related systems<br>- Part 1: General requirements |
| IEC 61508-2 | Functional safety of electrical / electronic / programmable electronic safety-related systems<br>- Part 2: Requirements for electrical/electronic/programmable electronic safety-related systems |
| IEC 61508-3 | Functional safety of electrical / electronic / programmable electronic safety-related systems<br>- Part 3: Software requirements |
| IEC 61508-4 | Functional safety of electrical / electronic / programmable electronic safety-related systems<br>- Part 4: Definitions and abbreviations |
| EN 61800-2 | Adjustable speed electrical power drive systems<br>Part 2: General requirements - Rating specifications for low voltage adjustable frequency AC power drive systems |
| EN 61800-3 | Adjustable speed electrical power drive systems<br>- Part 3: EMC requirements and specific test methods |
| EN 61800-5-1 | Adjustable speed electrical power drive systems<br>- Part 5-1: Safety requirements - Electrical, thermal and energy |
| EN 62061 | Safety of machinery<br>- Functional safety of safety-related electrical, electronic and programmable electronic control systems |

1) Replacement for EN 60068-2-32

## 2.2 Requirements for immunity to disturbances

- EN 61800-3 requirements apply.

| Immunity | Testing performed per | Requirements per |
|---|---|---|
| Electrostatic discharge (ESD) | EN 61000-4-2 | EN 61800-3: Product standard - Adjustable speed electrical power drive systems |
| High-frequency electromagnetic fields (HF field) | EN 61000-4-3 | EN 61800-3: Product standard - Adjustable speed electrical power drive systems |
| High-speed transient electrical disturbances (Burst) | EN 61000-4-4 | EN 61800-3: Product standard - Adjustable speed electrical power drive systems |
| Surge voltages (Surge) | EN 61000-4-5 | EN 61800-3: Product standard - Adjustable speed electrical power drive systems |
| Conducted disturbances | EN 61000-4-6 | EN 61800-3: Product standard - Adjustable speed electrical power drive systems |
| Network harmonics | EN 61000-2-4 | EN 61800-3: Product standard - Adjustable speed electrical power drive systems |
| Commutation notches | EN 60146-1-1 | EN 61800-3: Product standard - Adjustable speed electrical power drive systems |
| Voltage dips | EN 61000-4-34 | EN 61800-3: Product standard - Adjustable speed electrical power drive systems |
| Short-term interruptions | EN 61000-4-34 | EN 61800-3: Product standard - Adjustable speed electrical power drive systems |
| Voltage deviations | EN 61000-2-4 | EN 61800-3: Product standard - Adjustable speed electrical power drive systems |
| Voltage unbalance | EN 61000-2-4 | EN 61800-3: Product standard - Adjustable speed electrical power drive systems |
| Frequency changes | EN 61000-2-4 | EN 61800-3: Product standard - Adjustable speed electrical power drive systems |

### Evaluation criteria for performance

| Criteria (PC) | During test | After test |
|---|---|---|
| **A** | The system shall continue to operate as intended.<br>No loss of function or performance. | The system shall continue to operate as intended. |
| **B** | Degradation of performance accepted.<br>The operating mode is not permitted to change.<br>Irreversible loss of stored data is not permitted. | The system shall continue to operate as intended.<br>Temporary degradation of performance must be self-recoverable. |
| **C** | Loss of functions accepted, but no destruction of hardware or software (program or data). | The system shall continue to operate as intended automatically, after manual restart or power off / power on. |

### 2.2.1 High-frequency interference

#### Electrostatic discharge (ESD)

| Testing performed per EN 61000-4-2 | Requirements per EN 61800-3 | PC |
|---|---|---|
| Contact discharge (CD) on conductive accessible parts | ±4 kV | B |
| Air discharge (AD) on insulating accessible parts | ±8 kV | |

#### High-frequency electromagnetic fields (HF field)

| Testing performed per EN 61000-4-3 | Requirements per EN 61800-3 | PC |
|---|---|---|
| Housing, completely wired | 80 MHz to 1 GHz<br>10 V/m<br>80% amplitude modulation (1 kHz) | A |
| | 1.4 GHz to 2 GHz<br>3 V/m<br>80% amplitude modulation (1 kHz) | |
| | 2 GHz to 2.7 GHz<br>1 V/m<br>80% amplitude modulation (1 kHz) | |

#### High-speed transient electrical disturbances (Burst)

| Testing performed per EN 61000-4-4 | Requirements per EN 61800-3 | PC |
|---|---|---|
| Power supply connections | ±2 kV<br>1 min<br>Direct coupling | B |
| Connections for process measurement, open-loop and closed-loop process control | ±2 kV<br>1 min | |
| Signal interfaces | ±1 kV<br>1 min | |

#### Surge voltages (Surge)

| Testing performed per EN 61000-4-5 | Requirements per EN 61800-3 | PC |
|---|---|---|
| Power supply connections | ±1 kV<br>DM<br>Symmetrical | B |
| | ±2 kV<br>CM<br>Asymmetrical | |
| Connections for process measurement, open-loop and closed-loop process control | ±1 kV<br>CM<br>Asymmetrical | |
| Signal interfaces | --- | |

#### Conducted disturbances

| Testing performed per EN 61000-4-6 | Requirements per EN 61800-3 | PC |
|---|---|---|
| Power supply connections | 150 kHz to 80 MHz<br>10 V<br>80% amplitude modulation (1 kHz) | A |
| Connections for process measurement, open-loop and closed-loop process control | | |
| Signal interfaces | | |

### 2.2.2 Low-frequency interference

The following limit values are applicable for industrial environments (category C3).

#### Network harmonics

| Testing performed per EN 61000-2-4, class 3 | Requirements per EN 61800-3 | PC |
|---|---|---|
| Harmonics | THD = 12% | A |

#### Commutation notches

| Testing performed per EN 60146-1-1, class B | Requirements per EN 61800-3 | PC |
|---|---|---|
| Commutation notches | Depth = 40%<br>Total area = 250% in % degrees | A |

#### Voltage dips

| Testing performed per EN 1000-4-34 / class 3 | Requirements per EN 61800-3 | | PC |
|---|---|---|---|
| | Residual voltage | Periods | |
| AC power inputs | 0% | 1 (50/60 Hz)[1)] | C |
| | 40% | 10/12 (50/60 Hz)[1)] | |
| | 70% | 25/30 (50/60 Hz)[1)] | |
| | 80% | 250/300 (50/60 Hz)[1)] | |

1) Mains frequency per manufacturer data

#### Short-term interruptions

| Testing performed per EN 1000-4-34 / class 3 | Requirements per EN 61800-3 | | PC |
|---|---|---|---|
| | Residual voltage | Periods | |
| AC power inputs | 0% | 250/300 (50/60 Hz)[1)] | C |

1) Mains frequency per manufacturer data

#### Voltage deviations

| Testing performed per EN 61000-2-4 / class 2 | Requirements per EN 61800-3 | PC |
|---|---|---|
| Voltage deviations | ± 10% | A |

#### Voltage unbalance

| Testing performed per EN 61000-2-4, class 3 | Requirements per EN 61800-3 | PC |
|---|---|---|
| Voltage unbalance | 3% of negative component | A |

#### Frequency changes

| Testing performed per EN 61000-2-4 | Requirements per EN 61800-3 | PC |
|---|---|---|
| Frequency changes | ±2%<br>(±4% if the power supply is isolated from public power supply networks) | A |
| Speed of frequency change | ±1%/s<br>(±2%/s if the power supply is isolated from public power supply networks) | |

## 2.3 Emission requirements

| Phenomenon | Testing performed per | Limit values per |
|---|---|---|
| Emissions related to lines | EN 55011 | EN 61800-3: Product standard - Adjustable speed electrical power drive systems |
| Radiated emissions | EN 55011 | EN 61800-3: Product standard - Adjustable speed electrical power drive systems |

### Emissions related to lines

| Testing performed per EN 55011 | Limit values per EN 61800-3 | | |
|---|---|---|---|
| | Frequency band | Quasi-peak value | Mean |
| AC mains connection<br>150 kHz to 30 MHz<br>I ≤ 100 A | 150 kHz to 500 kHz | 100 dB (µV) | 90 dB (µV) |
| | 500 kHz to 5 MHz | 86 dB (µV) | 76 dB (µV) |
| | 5 MHz to 30 MHz | 90 dB (µV)<br>Decreases with the logarithm of the frequency to 70 | 80 dB (µV)<br>Decreases with the logarithm of the frequency to 60 |
| AC mains connection<br>150 kHz to 30 MHz<br>I > 100 A | 150 kHz to 500 kHz | 130 dB (µV) | 120 dB (µV) |
| | 500 kHz to 5 MHz | 125 dB (µV) | 115 dB (µV) |
| | 5 MHz to 30 MHz | 115 dB (µV) | 105 dB (µV) |

### Radiated emissions

| Testing performed per EN 55011 | Limit values per EN 61800-3 | |
|---|---|---|
| | Frequency band | Quasi-peak value |
| Electric field / Measured from 10 m<br>30 MHz to 1 GHz | 30 MHz to 230 MHz | 50 dB (µV/m) |
| | 230 MHz to 1 GHz | 60 dB (µV/m) |

## 2.4 Mechanical conditions

| Testing | Testing performed per | Requirements per |
|---|---|---|
| Vibration (sinusoidal) / Operation | EN 60068-2-6 | EN 61800-2: Product standard - Adjustable speed electrical power drive systems |
| | | EN 60721-3-3 / class 3M4 / class 3M1 |
| Vibration (sinusoidal) / Transport (packaged) | EN 60068-2-6 | EN 61800-2: Product standard - Adjustable speed electrical power drive systems |
| | | EN 60721-3-2 / Class 2M1 |
| Free fall / Transport (packaged) | EN 60068-2-31[1)] | EN 61800-2: Product standard - Programmable logic controllers |
| | | EN 60721-3-2 / Class 2M1 |

1) Replacement for EN 60068-2-32

### Vibration (sinusoidal) / Operation

| Testing performed per EN 60068-2-6 | Requirements per EN 60721-3-3 / class 3M1 | |
|---|---|---|
| | Frequency | Amplitude |
| Vibration (sinusoidal) / Operation | 2 to 9 Hz | 3 mm |
| | 9 to 200 Hz | Acceleration 0.1 g [1)] |

1) 1 g = 10 m/s²

### Vibration (sinusoidal) / Transport (packaged)

| Testing performed per EN 60068-2-6 | Requirements per EN 60721-3-2 / class 2M1 | |
|---|---|---|
| | Frequency | Amplitude |
| Vibration (sinusoidal) / Transport (packaged)[1)] | 2 to 9 Hz | 3.5 mm |
| | 9 to 200 Hz | Acceleration 1 g[2)] |
| | 200 to 500 Hz | Acceleration 1.5 g[2)] |

1) The values in Vibration (sinusoidal) / Operation apply to modules that are not in their original packaging.
2) 1 g = 10 m/s²

### Free fall / Transport (packaged)

| Testing performed per EN 60068-2-31 | Requirements per EN 60721-3-2 / class 2M1 | |
|---|---|---|
| | Weight | Height [1)] |
| Free fall / Transport (packaged) | <10 kg | 0.8 m |
| | 10 to 40 kg | 0.6 m |
| | >40 kg | 0.25 m |

1) Height per EN ISO 4180.

## 2.5 Climate conditions

| Testing | Testing performed per | Requirements per |
|---|---|---|
| Operation | --- | EN 61800-2: Product standard - Adjustable speed electrical power drive systems |
| | | EN 60721-3-3 / class 3K3 |
| Storage | --- | EN 61800-2: Product standard - Adjustable speed electrical power drive systems |
| | | EN 60721-3-1 / class 1K4 / class 1K3 |
| Transport | --- | EN 61800-2: Product standard - Adjustable speed electrical power drive systems |
| | | EN 60721-3-2 / class 2K3 |

### Operation

| | Requirements per EN 60721-3-3 / class 3K3 |
|---|---|
| Ambient temperature during operation | 5 to 55°C |
| Relative humidity during operation | 5 to 85%, non-condensing |

### Storage

| | Requirements per EN 60721-3-1 / class 1K4 | Requirements per EN 60721-3-1 / class 1K3 |
|---|---|---|
| Storage temperature | -25 to 55°C | --- |
| Relative humidity during storage | --- | 5 to 95%, non-condensing |

### Transport

| | Requirements per EN 60721-3-2 / class 2K2 |
|---|---|
| Transport temperature | -25 to 70°C |
| Relative humidity during transport | Max. 95% at 40°C |

## 2.6 Electrical safety

### Overvoltage category

| Requirement per EN 61800-2 | Definition per EN 61800-5-1 |
|---|---|
| Overvoltage category III | Equipment supplied from the power mains and permanently connected in fixed installations (including and downstream of the main distribution board). |

### Pollution degree

| Requirement per EN 61800-2 | Definition per EN 61800-5-1 |
|---|---|
| Pollution degree 2 | Usually only non-conductive pollution occurs; however, temporary conductivity due to condensation must occasionally be expected when the module is not in operation. |

### Protection rating provided by enclosure (IP code)

| Requirement | Meaning of codes per EN 60529 | Meaning for the protection of equipment | Meaning for the protection of personnel |
|---|---|---|---|
| IP20 | First number IP**2**x | Protected against solid foreign bodies with a diameter ≥12.5 mm. | Protected against touching dangerous parts with fingers. |
| | Second number IPx**0** | Not protected. | --- |

## 3 UL / CSA

**UL**

**Power Conversion Equipment E225616**

**Canada / USA**

**Underwriters Laboratories (UL)**
Products with this mark are tested by Underwriters Laboratories and listed as "power conversion equipment" in category NMMS (power conversion equipment) with file number E225616.

The mark is valid for the USA and Canada and facilitates the certification of your machines and systems in this economic area.

Standards applied:

| | |
|---|---|
| UL 508c | Power conversion equipment |
| CSA-C22.2 No. 274 | Adjustable speed drives |

**Certificate**
Website > Downloads > Certificates > UL > ACOPOS > E225616 UL certificate of compliance - ACOPOS

## 4 EAC

**EAC**

**Eurasian Conformity (EAC)**

Products with this marking have been tested by an accredited testing laboratory and approved for import (based on EU compliance) to the newly founded Eurasian Economic Union (Russia, Belarus, Kazakhstan, etc.).

**Certificate**
Website > Downloads > Certificates > EAC > ACOPOS > EAC conformity declaration 8V servo drives

## 5 KC

**KC**

**Korean Conformity (KC)**

Products with this marking have been tested by an accredited testing laboratory and approved for import to the Korean market (based on EU compliance).

**Certificate**
Website > Downloads > Certificates > KC > ACOPOS > ACOPOS KC certificates

# 6 Standards and definitions for safety technology

### Stop functions per EN 60204-1 (Electrical equipment of machines, Part 1: General requirements)

There are three categories of stop functions:

| Category | Description |
|---|---|
| 0 | Stopping by immediate removal of power to the machine actuators (i.e. an uncontrolled stop). |
| 1 | A controlled stop with power left available to the machine actuators to allow for stopping. Power is only interrupted when standstill is achieved. |
| 2 | A controlled stop with power left available to the machine actuators. |

Table 201: Overview of stop function categories

The necessary stop functions must be determined based on a risk assessment of the machine. Category 0 and category 1 stop functions must be functional regardless of operating mode. A category 0 stop must have priority. Stop functions must have priority over assigned start functions. Resetting the stop function is not permitted to trigger a dangerous state.

### Emergency stops per IEC 60204-1:2006 (Electrical equipment of machines, Part 1: General requirements)

In addition to the requirements for stop functions, the emergency stop function has the following requirements:

- It shall override all other functions and operations in all modes.
- Power to the machine actuators that can cause a hazardous situation shall be removed as quickly as possible without creating other hazards.
- A reset is not permitted to initiate a restart.

Emergency stops must be category 0 or category 1 stop functions. The necessary stop function must be determined based on a risk assessment of the machine.

### Performance levels (PL) per EN ISO 13849-1 (Safety of machinery - Safety-related parts of control systems, Part 1: General principles for design)

The safety-related parts of control systems must meet one or more of the requirements for five defined performance levels. These performance levels define the required behavior of safety-related controller parts with regard to their resistance to errors.

| Performance level (per EN ISO 13849-1) | Safety integrity level - SIL (per IEC 61508-2) | Short description | System behavior |
|---|---|---|---|
| a | --- | Safety-related components must be designed and built in such away that they can meet the expected operational requirements (no specific safety measures are implemented). | **Caution!**<br>**The occurrence of a fault can lead to the loss of safety functionality.** |
| b | 1 | Safety-related components must be designed and built in such a way that only reliable components and safety principles are used (e.g. preventing short circuits by using sufficient distances, reducing the probability of errors by using oversized components, defining the failure route, idle current principle, etc.). | **Caution!**<br>**The occurrence of a fault can lead to the loss of safety functionality.** |
| c | 1 | Safety related parts shall be designed so that their safety functions shall be checked at suitable intervals by the machine control system. (e.g. automatic or manual check during start-up) | **Caution!**<br>**An error between checks can cause the loss of safety functionality. The loss of safety functionality will be detected during the check.** |
| d | 2 | Safety-related parts shall be designed so that a single fault does not lead to the loss of the safety function. Individual errors should – if possible – be detected the next time (or before) the safety function is required. | **Caution!**<br>**Safety functionality remains active when an error occurs. Some but not all errors are detected. A buildup of undetected errors can cause safety functionality to fail.** |
| e | 3 | Safety-related parts shall be designed so that a single fault does not lead to the loss of the safety function. Individual errors must be detected the next time (or before) the safety function is required. If this type of detection is not possible, a buildup of errors is not permitted to cause safety functionality to fail. | **Information:**<br>**Safety functionality remains active when an error occurs. Errors are detected in time to prevent safety functionality from failing.** |

Table 202: Overview of performance levels (PL)

A suitable performance level must be selected separately for each drive system (or for each axis) based on a risk assessment. This risk assessment is a part of the total risk assessment for the machine.

The following risk graph (per EN ISO 13849-1, appendix A) provides a simplified procedure for risk assessment:

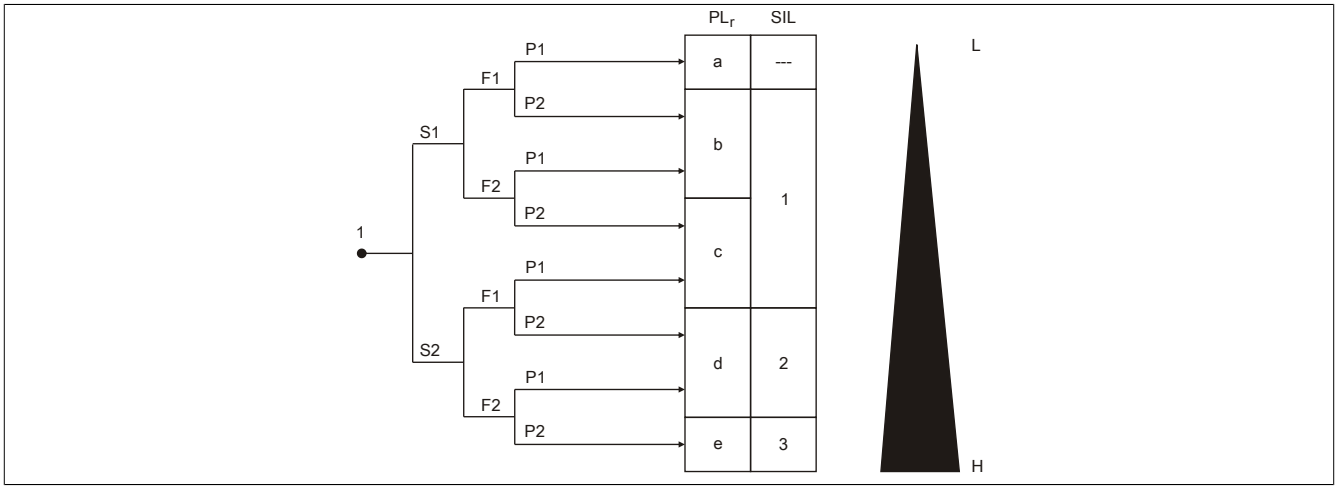


Figure 97: Risk diagram for determining the $PL_r$ for each safety function per EN ISO 13849-1, appendix A

### Legend:

1 Starting point for assessing the impact on risk reduction
L Low contribution to risk reduction
H High contribution to risk reduction
$PL_r$ Required performance level
SIL Safety Integrity Level per IEC 61508-2

### Risk parameters

S Severity of injury
S1 Slight (normally reversible injury)
S2 Serious (normally irreversible injury or death)
F Frequency and/or duration of the exposure to the hazard
F1 Seldom to less often and/or exposure time is short.
F2 Frequent to continuous and/or exposure time is long.
P Possibility of avoiding hazard or limiting harm
P1 Possible under specific conditions
P2 Scarcely possible

The performance level to be used is determined by starting at the specified starting point and taking the risk parameters S, F and P into consideration.





Provided by Industrial Automation Co. • www.industrialautomationco.com • Parts & Repair: 877-727-8757

Provided by Industrial Automation Co. • www.industrialautomationco.com • Parts & Repair: 877-727-8757

# Appendix A • Accessories included in delivery

## 1 ACOPOS

### 1.1 8V1010.0xx-2/8V1016.0xx-2

<table>
<tr><th>Figure</th><th>Quan-tity</th><th>Name</th><th>Model number</th></tr>
<tr><td></td><td>1</td><td>Accessory set 8V1022/8V1045/8V1090 consisting of:
<table>
<tr><th>Quan-tity</th><th>Details</th><th>Model number</th></tr>
<tr><td>1</td><td>Screw clamp - 18 pin</td><td>7TB718.9</td></tr>
<tr><td>1</td><td>Screw clamp - 4 pin PC5, labeled 1010</td><td>8TB3104.203L-10</td></tr>
<tr><td>1</td><td>Screw clamp - 4 pin PC5, labeled 1100</td><td>8TB3104.202N-10</td></tr>
<tr><td>1</td><td>Screw clamp - 4 pin PC5, labeled 0110</td><td>8TB3104.204G-11</td></tr>
<tr><td>1</td><td>Screw clamp - 4 pin MSTB, labeled 1100</td><td>8TB2104.202N-00</td></tr>
<tr><td>1</td><td>Screw clamp - 4 pin MSTB, labeled 1010</td><td>8TB2104.203L-00</td></tr>
</table></td><td>8X0001.00-1</td></tr>
<tr><td></td><td>1</td><td>Accessory set for 8V1016/8V1010 consisting of:
<table>
<tr><th>Quan-tity</th><th>Details</th><th>Model number</th></tr>
<tr><td>1</td><td>Shield plate 1010/1016</td><td>-</td></tr>
<tr><td>1</td><td>Hammer foot bolt clamp B14ER</td><td>-</td></tr>
<tr><td>1</td><td>DIN7985 M3x5 Torx</td><td>-</td></tr>
<tr><td>2</td><td>M3 locknut</td><td>-</td></tr>
</table></td><td>8X0040.00-1</td></tr>
<tr><td>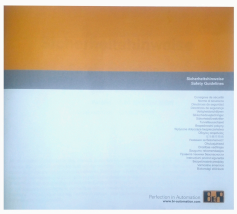</td><td>1</td><td>Safety guidelines</td><td>MAACPSH-X</td></tr>
<tr><td></td><td>1</td><td>Label sheet ACOPOS stickers multilingual</td><td>-</td></tr>
<tr><td></td><td>1</td><td>Label sheet pinout ACOPOS 1010.00/1016.00</td><td>-</td></tr>
</table>

## 1.2 8V1010.5xx-2/8V1016.5xx-2

<table>
<tr><th>Figure</th><th>Quan-tity</th><th>Name</th><th>Model number</th></tr>
<tr><td></td><td>1</td><td>Accessory set 8V1022/8V1045/8V1090 consisting of:
<table>
<tr><th>Quan-tity</th><th>Details</th><th>Model number</th></tr>
<tr><td>1</td><td>Screw clamp - 18 pin</td><td>7TB718.9</td></tr>
<tr><td>1</td><td>Screw clamp - 4 pin PC5, labeled 1010</td><td>8TB3104.203L-10</td></tr>
<tr><td>1</td><td>Screw clamp - 4 pin PC5, labeled 1100</td><td>8TB3104.202N-10</td></tr>
<tr><td>1</td><td>Screw clamp - 4 pin PC5, labeled 0110</td><td>8TB3104.204G-11</td></tr>
<tr><td>1</td><td>Screw clamp - 4 pin MSTB, labeled 1100</td><td>8TB2104.202N-00</td></tr>
<tr><td>1</td><td>Screw clamp - 4 pin MSTB, labeled 1010</td><td>8TB2104.203L-00</td></tr>
</table></td><td>8X0001.00-1</td></tr>
<tr><td></td><td>1</td><td>Accessory set for 8V1016/8V1010 consisting of:
<table>
<tr><th>Quan-tity</th><th>Details</th><th>Model number</th></tr>
<tr><td>1</td><td>Shield plate 1010/1016</td><td>-</td></tr>
<tr><td>1</td><td>Hammer foot bolt clamp B14ER</td><td>-</td></tr>
<tr><td>1</td><td>DIN7985 M3x5 Torx</td><td>-</td></tr>
<tr><td>2</td><td>M3 locknut</td><td>-</td></tr>
</table></td><td>8X0040.00-1</td></tr>
<tr><td></td><td>1</td><td>Safety guidelines</td><td>MAACPSH-X</td></tr>
<tr><td></td><td>1</td><td>Label sheet ACOPOS stickers multilingual</td><td>-</td></tr>
<tr><td></td><td>1</td><td>Label sheet pinout ACOPOS 1010.50/1016.50</td><td>-</td></tr>
</table>

## 1.3 8V1022.xxx-2/8V1045.xxx-2/8V1090.xxx-2

<table>
<tr><th>Figure</th><th>Quan-tity</th><th>Name</th><th>Model number</th></tr>
<tr><td></td><td>1</td><td>Accessory set 8V1022/8V1045/8V1090 consisting of:
<table>
<tr><th>Quan-tity</th><th>Details</th><th>Model number</th></tr>
<tr><td>1</td><td>Screw clamp - 18 pin</td><td>7TB718.9</td></tr>
<tr><td>1</td><td>Screw clamp - 4 pin PC5, labeled 1010</td><td>8TB3104.203L-10</td></tr>
<tr><td>1</td><td>Screw clamp - 4 pin PC5, labeled 1100</td><td>8TB3104.202N-10</td></tr>
<tr><td>1</td><td>Screw clamp - 4 pin PC5, labeled 0110</td><td>8TB3104.204G-11</td></tr>
<tr><td>1</td><td>Screw clamp - 4 pin MSTB, labeled 1100</td><td>8TB2104.202N-00</td></tr>
<tr><td>1</td><td>Screw clamp - 4 pin MSTB, labeled 1010</td><td>8TB2104.203L-00</td></tr>
</table></td><td>8X0001.00-1</td></tr>
<tr><td></td><td>1</td><td>ACOPOS accessory set consisting of:
<table>
<tr><th>Quan-tity</th><th>Details</th><th>Model number</th></tr>
<tr><td>1</td><td>Stress relief</td><td>-</td></tr>
<tr><td>1</td><td>Shield terminal SKL8</td><td>-</td></tr>
<tr><td>1</td><td>Shield terminal SK14</td><td>-</td></tr>
<tr><td>2</td><td>M3 locknut</td><td>-</td></tr>
</table></td><td>8X0010.00-1</td></tr>
<tr><td></td><td>1</td><td>Safety guidelines</td><td>MAACPSH-X</td></tr>
<tr><td></td><td>1</td><td>Label sheet ACOPOS stickers multilingual</td><td>-</td></tr>
<tr><td></td><td>1</td><td>Label sheet pinout ACOPOS 8V1022/8V1045/8V1090</td><td>-</td></tr>
</table>

## 1.4 8V1180.xxx-2/8V1320.xxx-2

<table>
<tr><th>Figure</th><th>Quan-tity</th><th>Name</th><th>Model number</th></tr>
<tr><td></td><td>1</td><td>ACOPOS accessories, connector set 1180/1320 3ph consisting of:
<table>
<tr><th>Quan-tity</th><th>Details</th><th>Model number</th></tr>
<tr><td>1</td><td>Screw clamp - 18 pin</td><td>7TB718.9</td></tr>
<tr><td>1</td><td>Screw clamp - 4 pin 1r PC6 labeled 0110</td><td>8TB4104.204G-00</td></tr>
<tr><td>1</td><td>Screw clamp - 4 pin 1r PC6 labeled 1100</td><td>8TB4104.202N-00</td></tr>
<tr><td>1</td><td>Screw clamp - 4 pin 1r PC6 labeled 1010</td><td>8TB4104.203L-00</td></tr>
<tr><td>1</td><td>Screw clamp - 3 pin 1r PC5 labeled 000</td><td>8TB3103.202A-10</td></tr>
<tr><td>1</td><td>Screw clamp - 4 pin 1r MSTB labeled 1100</td><td>8TB2104.202N-00</td></tr>
<tr><td>1</td><td>Screw clamp - 4 pin 1r MSTB labeled 1010</td><td>8TB2104.203L-00</td></tr>
</table></td><td>8X0002.00-1</td></tr>
<tr><td></td><td>1</td><td>ACOPOS accessories, shield set 1180/1320 consisting of:
<table>
<tr><th>Quan-tity</th><th>Details</th><th>Model number</th></tr>
<tr><td>1</td><td>Shielding bolt</td><td>-</td></tr>
<tr><td>2</td><td>Shield terminal SK14</td><td>-</td></tr>
<tr><td>2</td><td>Shield terminal SK20</td><td>-</td></tr>
<tr><td>4</td><td>DIN965 M4x8 TORX</td><td>-</td></tr>
</table></td><td>8X0020.00-1</td></tr>
<tr><td>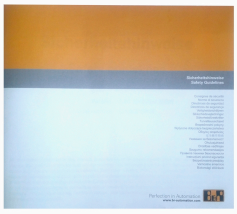</td><td>1</td><td>Safety guidelines</td><td>MAACPSH-X</td></tr>
<tr><td></td><td>1</td><td>Label sheet ACOPOS stickers multilingual</td><td>-</td></tr>
<tr><td></td><td>1</td><td>Label sheet pinout ACOPOS 8V1180/8V1320</td><td>-</td></tr>
</table>

## 1.5 8V1640.xxx-2

<table>
<tr><th>Figure</th><th>Quan-tity</th><th>Name</th><th>Model number</th></tr>
<tr><td></td><td>1</td><td>ACOPOS drive accessory set for 8V1640 K0 consisting of:
<table>
<tr><th>Quan-tity</th><th>Details</th><th>Model number</th></tr>
<tr><td>1</td><td>Screw clamp - 18 pin</td><td>7TB718.9</td></tr>
<tr><td>1</td><td>Screw clamp - 3 pin 1r PC6 labeled 000</td><td>8TB4103.202A-00</td></tr>
<tr><td>1</td><td>Screw clamp - 4 pin 1r MSTB labeled 1100</td><td>8TB2104.202N-00</td></tr>
<tr><td>1</td><td>Screw clamp - 4 pin 1r MSTB labeled 1010</td><td>8TB2104.203L-00</td></tr>
</table></td><td>8X0005.00-1</td></tr>
<tr><td></td><td>1</td><td>ACOPOS accessory set for shield contacting 8V1640 consisting of:
<table>
<tr><th>Quan-tity</th><th>Details</th><th>Model number</th></tr>
<tr><td>1</td><td>Shielding bolt</td><td>-</td></tr>
<tr><td>1</td><td>Hammer foot bolt clamp B18ER</td><td>-</td></tr>
<tr><td>1</td><td>Hammer foot bolt clamp B22ER</td><td>-</td></tr>
<tr><td>1</td><td>Hammer foot bolt clamp B34ER</td><td>-</td></tr>
<tr><td>3</td><td>Hexagonal socket head cap screw 8mm M5 DIN912 galv.</td><td>-</td></tr>
</table></td><td>8X0030.00-1</td></tr>
<tr><td>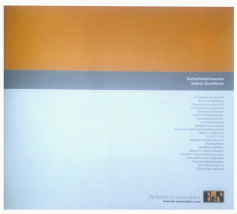</td><td>1</td><td>Safety guidelines</td><td>MAACPSH-X</td></tr>
<tr><td></td><td>1</td><td>Label sheet ACOPOS stickers multilingual</td><td>-</td></tr>
<tr><td></td><td>1</td><td>Label sheet pinout ACOPOS 8V1640/8V128M</td><td>-</td></tr>
</table>

## 1.6 8V128M.xxx-2

<table>
<tr><th>Figure</th><th>Quan-tity</th><th>Name</th><th>Model number</th></tr>
<tr><td></td><td>1</td><td>ACOPOS accessory set for 8V1640 K0 consisting of:
<table>
<tr><th>Quan-tity</th><th>Details</th><th>Model number</th></tr>
<tr><td>1</td><td>Screw clamp - 18 pin</td><td>7TB718.9</td></tr>
<tr><td>1</td><td>Screw clamp - 3 pin 1r PC6 labeled 000</td><td>8TB4103.202A-00</td></tr>
<tr><td>1</td><td>Screw clamp - 4 pin 1r MSTB labeled 1100</td><td>8TB2104.202N-00</td></tr>
<tr><td>1</td><td>Screw clamp - 4 pin 1r MSTB labeled 1010</td><td>8TB2104.203L-00</td></tr>
</table></td><td>8X0005.00-1</td></tr>
<tr><td></td><td>1</td><td>ACOPOS accessory set for shield contacting 8V128M consisting of:
<table>
<tr><th>Quan-tity</th><th>Details</th><th>Model number</th></tr>
<tr><td>1</td><td>Shielding bolt</td><td>-</td></tr>
<tr><td>1</td><td>Hammer foot bolt clamp B18ER</td><td>-</td></tr>
<tr><td>1</td><td>Hammer foot bolt clamp B22ER</td><td>-</td></tr>
<tr><td>1</td><td>Hammer foot bolt clamp B34ER</td><td>-</td></tr>
<tr><td>1</td><td>Hammer foot bolt clamp B46ER</td><td>-</td></tr>
<tr><td>3</td><td>Hexagonal socket head cap screw 8mm M5 DIN912 galv.</td><td>-</td></tr>
</table></td><td>8X0030.00-1</td></tr>
<tr><td>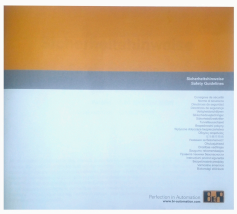</td><td>1</td><td>Safety guidelines</td><td>MAACPSH-X</td></tr>
<tr><td></td><td>1</td><td>Label sheet ACOPOS stickers multilingual</td><td>-</td></tr>
<tr><td></td><td>1</td><td>Label sheet pinout ACOPOS 8V1640/8V128M</td><td>-</td></tr>
</table>

# Appendix B • UL marks

- ACOPOS servo drives provide motor overload protection at 100% of the FLA rating.
- ACOPOS servo drives are suitable for use on a circuit capable nof delivery not more than 65,000 RMS symmetrical amperes, 480 VAC 3ph maximum.
- Integral solid state short circuit protection does not provide branch circuit protection. Branch circuit protection must be provided in accordance with the National Electric Code and any additional local codes.
- The opening of the branch-circuit protective device may be an indication that a fault current has been interrupted. To reduce the risk of fire or electric shock, current-carrying parts and other components of the controller should be examined and replaced if damaged.
  LE DÉCLENCHEMENT DU DISPOSITIF DE PROTECTION DU CIRCUIT DE DÉRIVATION PEUT ÊTRE DÛ À UNE COUPURE QUI RÉSULTE D'UN COURANT DE DÉFAUT. POUR LIMITER LE RISQUE D'INCENDIE OU DE CHOC ÉLECTRIQUE, EXAMINER LES PIÈCES PORTEUSES DE COURANT ET LES AUTRES ÉLÉMENTS DU CONTRÔLEUR ET LES REMPLACER S'ILS SONT ENDOMMAGÉS.
- ACOPOS servo drives are to be protected by external Class CC or J fuses rated 300 percent of output current rating maximum as branch circuit overcurrent protection.
- For branch circuit protection of the drives, use fuses or circuit breaker rated as tabulated below:

| Output current, A | Type of branch circuit protective device | Maximum Ampere rating, A |
|---|---|---|
| 1 - 128 A | Class CC or Class J fuses | 300 percent of output current rating |

# Appendix C • Servo drive cable assignments

## 1 Motors

### 1.1 8LS motors

#### Power connection

| Connector | Motor cable | | | Suitable cable extension[1] |
|---|---|---|---|---|
| | Order number[1] | Cross section Power lines[2] | Assembled specifically for | |
| speedtec size 1.0 | 8CMxxx.12-0 | 0.75 mm² | 8V1010.xxx-2<br>8V1016.xxx-2 | --- |
| | 8CMxxx.12-1 | 1.5 mm² | 8V1022.xxx-2<br>8V1045.xxx-2<br>8V1090.xxx-2 | 8BCMxxxx.11140-0 |
| | 8CMxxx.12-3 | 4 mm² | 8V1180.xxx-2<br>8V1320.xxx-2 | 8BCMxxxx.13140-0 |
| speedtec size 1.5 | 8CMxxx.19-3 | 4 mm² | 8V1180.xxx-2<br>8V1320.xxx-2 | 8BCMxxxx.13250-0 |
| | 8CMxxx.12-5 | 10 mm² | 8V1640.xxx-2<br>8V128M.xxx-2 | 8BCMxxxx.15250-0 |
| ---<br>(Terminal box) | 8CMxxx.10-5 | 10 mm² | ---[3] | --- |
| | 8CMxxx.12-8 | 35 mm² | ---[3] | --- |

1) xxx/xxxx - Cable length (005/0005 corresponds to 5 m, 020/0020 to 20 m, etc.). For available cable lengths, see the B&R website.
2) The stall current of the respective motor and method used to install the respective cable must be taken into account for the cross section of power lines.
3) The cable must be adapted to the construction of the servo drive by the customer.

#### Encoder connection

| Connector | Type | Encoder cable | | Suitable cable extension[1] |
|---|---|---|---|---|
| | | Order number[1] | Assembled specifically for | |
| speedtec size 1.0 | EnDat 2.1 | 8CExxx.12-1 | All ACOPOS servo drives | 8BCExxxx.11120-0 |
| springtec | EnDat 2.2 | 8BCFxxxx.1221B-0 | | 8BCFxxxx.12230-0 |
| speedtec size 1.0 | Resolver | 8CRxxx.12-1 | | 8BCRxxxx.11120-0 |

1) xxx/xxxx - Cable length (005/0005 corresponds to 5 m, 020/0020 to 20 m, etc.). For available cable lengths, see the B&R website.

#### Hybrid connection (single-cable solution)

| Connector | Hybrid motor cables | | | Suitable cable extension[1] |
|---|---|---|---|---|
| | Order number[1] | Cross section Power lines[2] | Assembled specifically for | |
| speedtec size 1.0 | 8CHxxx.12-1 | 1.5 mm² | 8V1010.xxx-2<br>8V1016.xxx-2<br>8V1022.xxx-2<br>8V1045.xxx-2<br>8V1090.xxx-2 | 8ECHxxxx.11140-0 |
| | 8CHxxx.12-3 | 4 mm² | 8V1180.xxx-2<br>8V1320.xxx-2 | 8ECHxxxx.13140-0 |

1) xxx/xxxx - Cable length (005/0005 corresponds to 5 m, 020/0020 to 20 m, etc.). For available cable lengths, see the B&R website.
2) The stall current of the respective motor and method used to install the respective cable must be taken into account for the cross section of power lines.

## 1.2 8LV motors

### Power connection

| Connector | Motor cable | | | Suitable cable extension [1] |
|---|---|---|---|---|
| | Order number [1] | Cross section Power lines [2] | Assembled specifically for | |
| springtec | 8BCMxxxx.1034C-0 | 0.75 mm² | 8V101x.50x-2 | 8BCMxxxx.10360-0 |
| speedtec size 1.0 | 8CMxxx.12-0 | 0.75 mm² | 8V1010.xxx-2 | --- |
| | 8CMxxx.12-1 | 1.5 mm² | 8V1016.xxx-2<br>8V1022.xxx-2<br>8V1045.xxx-2<br>8V1090.xxx-2 | 8BCMxxxx.11140-0 |

1) xxx/xxxx - Cable length (005/0005 corresponds to 5 m, 020/0020 to 20 m, etc.). For available cable lengths, see the B&R website.
2) The stall current of the respective motor and method used to install the respective cable must be taken into account for the cross section of power lines.

### Encoder connection

| Connector | Type | Encoder cable | | Suitable cable extension [1] |
|---|---|---|---|---|
| | | Order number [1] | Assembled specifically for | |
| springtec | EnDat 2.2 | 8BCFxxxx.1221B-0 | --- | 8BCFxxxx.12230-0 |
| | Resolver | 8BCRxxxx.1121A-0 | | 8BCRxxxx.11230-0 |

1) xxx/xxxx - Cable length (005/0005 corresponds to 5 m, 020/0020 to 20 m, etc.). For available cable lengths, see the B&R website.

### Hybrid connection (single-cable solution)

| Connector | Hybrid motor cables | | | Suitable cable extension [1] |
|---|---|---|---|---|
| | Order number [1] | Cross section Power lines [2] | Assembled specifically for | |
| speedtec size 1.0 | 8CHxxx.12-1 | 1.5 mm² | 8V1010.xxx-2<br>8V1016.xxx-2<br>8V1022.xxx-2<br>8V1045.xxx-2<br>8V1090.xxx-2 | 8ECHxxxx.11140-0 |

1) xxx/xxxx - Cable length (005/0005 corresponds to 5 m, 020/0020 to 20 m, etc.). For available cable lengths, see the B&R website.
2) The stall current of the respective motor and method used to install the respective cable must be taken into account for the cross section of power lines.

## 1.3 8JS motors

### Power connection

| Connector | Motor cable | | | Suitable cable extension [1] |
|---|---|---|---|---|
| | Order number [1] | Cross section Power lines [2] | Assembled specifically for | |
| speedtec size 1.0 | 8CMxxx.12-0 | 0.75 mm² | 8V1010.xxx-2<br>8V1016.xxx-2 | --- |
| | 8CMxxx.12-1 | 1.5 mm² | 8V1022.xxx-2<br>8V1045.xxx-2<br>8V1090.xxx-2 | 8BCMxxxx.11140-0 |
| | 8CMxxx.12-3 | 4 mm² | 8V1180.xxx-2<br>8V1320.xxx-2 | 8BCMxxxx.13140-0 |
| speedtec size 1.5 | 8CMxxx.19-3 | | | 8BCMxxxx.13250-0 |
| | 8CMxxx.12-5 | 10 mm² | 8V1640.xxx-2<br>8V128M.xxx-2 | 8BCMxxxx.15250-0 |

1) xxx/xxxx - Cable length (005/0005 corresponds to 5 m, 020/0020 to 20 m, etc.). For available cable lengths, see the B&R website.
2) The stall current of the respective motor and method used to install the respective cable must be taken into account for the cross section of power lines.

### Encoder connection

| Connector | Type | Encoder cable | | Suitable cable extension [1] |
|---|---|---|---|---|
| | | Order number [1] | Assembled specifically for | |
| speedtec size 1.0 | EnDat 2.1 | 8CExxx.12-1 | All ACOPOS servo drives | 8BCExxxx.11120-0 |
| | Resolver | 8CRxxx.12-1 | | 8BCRxxxx.11120-0 |

1) xxx/xxxx - Cable length (005/0005 corresponds to 5 m, 020/0020 to 20 m, etc.). For available cable lengths, see the B&R website.

## 1.4 8KS motors

### Power connection

| Connector | Motor cable | | | Suitable cable extension |
|---|---|---|---|---|
| | Order number [1] | Cross section Power lines [2] | Assembled specifically for [3] | |
| (---) Terminal box | 8CMxxx.10-5 | 10 mm² | --- | --- |
| | 8CMxxx.12-8 | 35 mm² | | |

1) xxx/xxxx - Cable length (005/0005 corresponds to 5 m, 020/0020 to 20 m, etc.). For available cable lengths, see the B&R website.
2) The stall current of the respective motor and method used to install the respective cable must be taken into account for the cross section of power lines.
3) The cable must be adapted to the construction of the servo drive by the customer.

### Encoder connection

| Connector | Type | Encoder cable | | Suitable cable extension [1] |
|---|---|---|---|---|
| | | Order number [1] | Assembled specifically for | |
| speedtec size 1.0 | EnDat 2.1 | 8CExxx.12-1 | All ACOPOS servo drives | 8BCExxxx.11120-0 |
| springtec | EnDat 2.2 | 8BCFxxxx.1221B-0 | | 8BCFxxxx.12230-0 |
| speedtec size 1.0 | Resolver | 8CRxxx.12-1 | | 8BCRxxxx.11120-0 |

1) xxx/xxxx - Cable length (005/0005 corresponds to 5 m, 020/0020 to 20 m, etc.). For available cable lengths, see the B&R website.

## 1.5 8LT motors

### Power connection

| Connector | Motor cable | | | Suitable cable extension [1] |
|---|---|---|---|---|
| | Order number [1] | Cross section Power lines [2] | Assembled specifically for | |
| speedtec size 1.0 | 8CMxxx.12-0 | 0.75 mm² | 8V1010.xxx-2<br>8V1016.xxx-2 | --- |
| | 8CMxxx.12-1 | 1.5 mm² | 8V1022.xxx-2<br>8V1045.xxx-2<br>8V1090.xxx-2 | 8BCMxxxx.11140-0 |
| | 8CMxxx.12-3 | 4 mm² | 8V1180.xxx-2<br>8V1320.xxx-2 | 8BCMxxxx.13140-0 |
| speedtec size 1.5 | 8CMxxx.19-3 | | | 8BCMxxxx.13250-0 |
| | 8CMxxx.12-5 | 10 mm² | 8V1640.xxx-2<br>8V128M.xxx-2 | 8BCMxxxx.15250-0 |
| ---<br>(Terminal box) | 8CMxxx.12-8 | 35 mm² | --- [3] | --- |

1) xxx/xxxx - Cable length (005/0005 corresponds to 5 m, 020/0020 to 20 m, etc.). For available cable lengths, see the B&R website.
2) The stall current of the respective motor and method used to install the respective cable must be taken into account for the cross section of power lines.
3) The cable must be adapted to the construction of the servo drive by the customer.

### Encoder connection

| Connector | Type | Encoder cable | | Suitable cable extension [1] |
|---|---|---|---|---|
| | | Order number [1] | Assembled specifically for | |
| speedtec size 1.0 | EnDat 2.1 | 8CExxx.12-1 | All ACOPOS servo drives | 8BCExxxx.11120-0 |
| springtec | EnDat 2.2 | 8BCFxxxx.1221B-0 | | 8BCFxxxx.12230-0 |

1) xxx/xxxx - Cable length (005/0005 corresponds to 5 m, 020/0020 to 20 m, etc.). For available cable lengths, see the B&R website.

# Appendix D • Forming DC bus capacitors

Electrolytic capacitors are installed in the DC bus of B&R servo drives and power inverters.
In electrolytic capacitors, the oxide layer acting as dielectric can be weakened by electrochemical processes when stored for a longer period when the power is switched off. In the worst case, this can cause a short circuit and subsequent destruction of the capacitor and irreparable damage to B&R modules.

When stored for periods over 1 year, DC bus capacitors may be destroyed during commissioning or preconditioning. If preconditioning takes place using a forming process defined for B&R modules, then proper operation can be guaranteed. Forming is performed by applying a defined voltage over a defined period of time. This reforms the oxide layer to ensure the functionality of the DC bus capacitors.



## Caution!

**DC bus capacitors can become damaged or destroyed when switching on at the nominal voltage after being stored for periods over 1 year.**

**Forming B&R modules stored over a long period of time before commissioning avoids damage to the capacitors.**

If modules are not supplied with nominal voltage for a longer period of time, the DC bus capacitors must be formed as follows.

The nominal voltage is the voltage permitted at the mains connections on the respective module.

Power is only supplied to the module; the output stage or controller is NOT permitted to be switched on during this!

**Storage time up to 1 year:** → No action required

**Storage time 1 to 2 years:** → Supply the module with nominal voltage 1 hour before commissioning.

**Storage time 2 to 3 years:** Supply the module with an adjustable power supply and increase the voltage in steps. Observe the following sequence:

1. Supply with 25% of the nominal voltage for 30 minutes.
2. Supply with 50% of the nominal voltage for 30 minutes.
3. Supply with 75% of the nominal voltage for 30 minutes.
4. Supply with 100% of the nominal voltage for 30 minutes.

Total forming time: >2 hours
The module is now ready for operation.

**Storage time 3 or more years:** Supply the module with an adjustable power supply and increase the voltage in steps. Observe the following sequence:

1. Supply with 25% of the nominal voltage for 2 hours.
2. Supply with 50% of the nominal voltage for 2 hours.
3. Supply with 75% of the nominal voltage for 2 hours.
4. Supply with 100% of the nominal voltage for 2 hours.

Total forming time: >8 hours
The module is now ready for operation.

## Information:

**B&R recommends forming at nominal voltage for 1 hour once a year.**

**B&R modules that have been stored for more than 5 years without forming should no longer be put into operation.**
**The storage period is valid from the time of delivery by B&R.**

Figure 1: EMC testing of ACOPOS servo drives - maximum security for the user ..... 10
Figure 2: Plug-in modules allow optimized, application-specific configuration of ACOPOS servo drives 11
Figure 3: Configuring ACOPOS servo drives using B&R Automation Studio guarantees fast and easy implementation of application requirements ..... 12
Figure 4: Optimal control of the movement using NC Test and Trace functionality ..... 14
Figure 5: Cam editor - for creating movement profiles simply and precisely ..... 15
Figure 6: Compact, modular motion control applications ..... 17
Figure 7: Extensive, modular motion control applications with up to 253 axes ..... 18
Figure 8: ACOPOS in a CAN bus network ..... 18
Figure 9: Drive-based automation with ACOPOS ..... 19
Figure 10: Warning on the servo drive ..... 22
Figure 11: Warning on the servo drive ..... 23
Figure 12: ACOPOS servo drive indicators ..... 31
Figure 13: ACOPOS 1010, 1016 - Pinout overview ..... 49
Figure 14: Trigger ..... 54
Figure 15: Limit ..... 55
Figure 16: Enable ..... 55
Figure 17: Input/output circuit diagram - ACOPOS 1010, 1016 ..... 56
Figure 18: ACOPOS 1022, 1045, 1090 - Pinout overview ..... 68
Figure 19: Trigger ..... 73
Figure 20: Limit ..... 73
Figure 21: Enable ..... 73
Figure 22: ACOPOS 1022, 1045, 1090 - Input/Output circuit diagram ..... 74
Figure 23: ACOPOS 1180, 1320 - Pinout overview ..... 83
Figure 24: Trigger ..... 88
Figure 25: Limit ..... 88
Figure 26: Enable ..... 88
Figure 27: Input/output circuit diagram - ACOPOS 1180, 1320 ..... 89
Figure 28: ACOPOS 1640, 128M - Pinout overview ..... 98
Figure 29: Trigger ..... 102
Figure 30: Limit ..... 102
Figure 31: Enable ..... 103
Figure 32: ACOPOS 1640, 128M - Input/Output circuit diagram ..... 103
Figure 33: AC110 - Input/Output circuit diagram ..... 106
Figure 34: AC114 - Input/Output circuit diagram ..... 109
Figure 35: AC120 - Input/Output circuit diagram ..... 113
Figure 36: AC121 - Input/Output circuit diagram ..... 117
Figure 37: Input/Output circuit diagram AC122 - Resolver interface ..... 120
Figure 38: AC123 - Input/Output circuit diagram ..... 124
Figure 39: BISS encoder interface 8AC125.60-2 Input/Output circuit diagram ..... 130
Figure 40: BISS encoder interface 8AC125.61-2 Input/Output circuit diagram ..... 133
Figure 41: AC130 - Input/Output circuit diagram ..... 140
Figure 42: AC131 mixed module - Input/Output circuit diagram ..... 144
Figure 43: Changing/Inserting the battery module 8AXB000.0000-00 ..... 146
Figure 44: 8B0W - Pinout overview ..... 149
Figure 45: 8CMxxx.12-0 motor cables - Cable diagram ..... 168
Figure 46: 8CMxxx.12-1, 8CMxxx.12-3 motor cables - Cable diagram ..... 169
Figure 47: 8CMxxx.19-3, 8CMxxx.12-5 motor cables - Cable diagram ..... 169
Figure 48: Hybrid motor cables - Cable diagram ..... 175
Figure 49: EnDat 2.1 cables - Cable diagram ..... 178
Figure 50: Resolver cables - Cable diagram ..... 181
Figure 51: Resolver cables - Cable diagram ..... 184
Figure 52: Installation position of the eye bolt for lifting ACOPOS 1640, 128M ..... 203
Figure 53: ACOPOS 1010, 1016 - Dimension diagram and installation dimensions ..... 204
Figure 54: ACOPOS 1022, 1045, 1090 - Dimension diagram and installation dimensions ..... 205
Figure 55: ACOPOS 1180, 1320 - Dimension diagram and installation dimensions ..... 206
Figure 56: ACOPOS 1640 - Dimension diagram and installation dimensions ..... 207



Provided by Industrial Automation Co. • www.industrialautomationco.com • Parts & Repair: 877-727-8757

Figure 57: ACOPOS 128M - Dimension diagram and installation dimensions ..... 208
Figure 58: 8B0W0045H000.001-1, 8B0W0079H000.001-1, 8B0W0096H000.001-1 - Dimension diagram ..... 209
Figure 59: 8B0W external braking resistors - Installation dimensions ..... 210
Figure 60: Installing ACOPOS plug-in modules ..... 211
Figure 61: Installing various ACOPOS series devices directly next to each other ..... 212
Figure 62: Filter fans - Function diagram ..... 213
Figure 63: Air/Air heat exchangers - Function diagram ..... 214
Figure 64: Air/Water heat exchangers - Function diagram ..... 215
Figure 65: Placing a cooling unit on top of the control cabinet ..... 216
Figure 66: Placing a cooling unit on the front of the control cabinet ..... 217
Figure 67: Stripped cable end ..... 218
Figure 68: Cable end with shielding mesh pulled back ..... 218
Figure 69: Pulling out the separately shielded signal lines ..... 219
Figure 70: Cable end without stranding elements ..... 219
Figure 71: Cable ends with shortened shielding mesh ..... 220
Figure 72: Attaching the shielding mesh ..... 220
Figure 73: Wire ends with wire end sleeves ..... 220
Figure 74: ACOPOS X3, individual power mains connection - Circuit diagram ..... 224
Figure 75: ACOPOS X3, power mains connection for a drive group - Circuit diagram ..... 227
Figure 76: ACOPOS X3, power mains connection for a drive group with optional line choke - Circuit diagram ..... 227
Figure 77: ACOPOS X2 DC bus connections - Circuit diagram ..... 230
Figure 78: DC bus power supply for ACOPOS servo drives ..... 232
Figure 79: ACOPOS X6, external braking resistor on ACOPOS 1180/1320/1640/128M - Circuit diagram ..... 236
Figure 80: Movement and load profile for one axis in a sample application ..... 237
Figure 81: Movement and load profile of one axis example ..... 240
Figure 82: Peak load capacity - 8V1180 / 8V1320 ..... 241
Figure 83: Peak load capacity - 8V1640 / 8V128M ..... 242
Figure 84: Determining the peak load factor k ..... 245
Figure 85: Thermal equivalent circuit diagram of the external braking resistor ..... 247
Figure 86: Basic selection of the cooling system ..... 250
Figure 87: Connection diagram for ground and shield connections ..... 261
Figure 88: Cable shielding in DSUB housing ..... 262
Figure 89: Male RJ45 connector - Grounding the cable shield ..... 262
Figure 90: Connecting cables to plug-in modules ..... 265
Figure 91: Block diagram of safe pulse disabling ..... 268
Figure 92: STO, category 3 / SIL 2 / PL d (variant A) ..... 270
Figure 93: STO, Category 3 / SIL 2 / PL d (Variant B) ..... 271
Figure 94: STO, SLS, SOS - Safety Category 3 / SIL 2 / PL d ..... 272
Figure 95: SS1, SLS, SS2 - Safety Category 3 / SIL 2 / PL d (Variant A) ..... 274
Figure 96: SS1, SLS, SS2 - Safety Category 3 / SIL 2 / PL d (Variant B) ..... 276
Figure 97: Risk diagram for determining the $PL_r$ for each safety function per EN ISO 13849-1, appendix A ..... 291





Provided by Industrial Automation Co. • www.industrialautomationco.com • Parts & Repair: 877-727-8757

Table 1: Manual history....9
Table 2: Environmentally friendly separation of materials....24
Table 3: Overview of the ACOPOS servo drive series....30
Table 4: ACOPOS servo drive - LED status indicators....31
Table 5: Status changes when starting up the operating system loader....31
Table 6: Error status with reference to CAN plug-in module AC110....32
Table 7: Error status with reference to POWERLINK V2 plug-in module AC114....32
Table 8: 8V1010.00-2, 8V1010.001-2 - Order data....33
Table 9: 8V1010.00-2, 8V1010.001-2 - Technical data....34
Table 10: 8V1010.50-2, 8V1010.501-2 - Order data....37
Table 11: 8V1010.50-2, 8V1010.501-2 - Technical data....38
Table 12: 8V1016.00-2, 8V1016.001-2 - Order data....41
Table 13: 8V1016.00-2, 8V1016.001-2 - Technical data....42
Table 14: 8V1016.50-2, 8V1016.501-2 - Order data....45
Table 15: 8V1016.50-2, 8V1016.501-2 - Technical data....46
Table 16: X1 - Pinout....50
Table 17: X2 - Pinout....50
Table 18: X2 - Pinout....50
Table 19: X3 - Pinout....51
Table 20: X3 - Pinout....51
Table 21: X4a - Pinout....52
Table 22: X4b - Pinout....52
Table 23: Enabling the external holding brake....53
Table 24: X5 - Pinout....54
Table 25: Protective ground connection (PE) - ACOPOS....54
Table 26: 8V1022.00-2, 8V1022.001-2 - Order data....57
Table 27: 8V1022.00-2, 8V1022.001-2 - Technical data....58
Table 28: 8V1045.00-2, 8V1045.001-2 - Order data....61
Table 29: 8V1045.00-2, 8V1045.001-2 - Technical data....62
Table 30: 8V1090.00-2, 8V1090.001-2 - Order data....65
Table 31: 8V1090.00-2, 8V1090.001-2 - Technical data....66
Table 32: X1 - Pinout....69
Table 33: X2 - Pinout....69
Table 34: X3 - Pinout....70
Table 35: X4a - Pinout....70
Table 36: X4b - Pinout....70
Table 37: Enabling the external holding brake....71
Table 38: X5 - Pinout....72
Table 39: Protective ground connection (PE) - ACOPOS....72
Table 40: 8V1180.00-2, 8V1180.001-2 - Order data....75
Table 41: 8V1180.00-2, 8V1180.001-2 - Technical data....76
Table 42: 8V1320.00-2, 8V1320.001-2 - Order data....79
Table 43: 8V1320.00-2, 8V1320.001-2 - Technical data....80
Table 44: X1 - Pinout....84
Table 45: X2 - Pinout....84
Table 46: X3 - Pinout....84
Table 47: X4a - Pinout....85
Table 48: X4b - Pinout....85
Table 49: Enabling the external holding brake....86
Table 50: X5 - Pinout....87
Table 51: X6 - Pinout....87
Table 52: Protective ground connection (PE) - ACOPOS....87
Table 53: 8V1640.00-2, 8V1640.001-2 - Order data....90
Table 54: 8V1640.00-2, 8V1640.001-2 - Technical data....91
Table 55: 8V128M.00-2, 8V128M.001-2 - Order data....94
Table 56: 8V128M.00-2, 8V128M.001-2 - Technical data....95
Table 57: X1 - Pinout....99



Provided by Industrial Automation Co. • www.industrialautomationco.com • Parts & Repair: 877-727-8757

Table 58: X2 - Pinout ... 99
Table 59: X3 - Pinout ... 99
Table 60: X4a - Pinout ... 100
Table 61: X4b - Pinout ... 100
Table 62: Enabling the external holding brake ... 101
Table 63: X5 - Pinout ... 102
Table 64: X6 - Pinout ... 102
Table 65: The maximum number of plug-in modules depends on the size of the servo drive ... 104
Table 66: Slot overview for ACOPOS plug-in modules ... 104
Table 67: 8AC110.60-3 - Order data ... 105
Table 68: 8AC110.60-3 - Technical data ... 105
Table 69: Setting the CAN node number ... 106
Table 70: AC110 CAN interface - Pinout ... 106
Table 71: 8AC114.60-2 - Order data ... 107
Table 72: 8AC114.60-2 - Technical data ... 107
Table 73: Setting the POWERLINK node number ... 108
Table 74: AC114 - Status LEDs ... 108
Table 75: POWERLINK - LED status indicators ... 108
Table 76: AC114 POWERLINK V2 interface - Pinout ... 109
Table 77: 8AC120.60-1 - Order data ... 110
Table 78: 8AC120.60-1 - Technical data ... 111
Table 79: AC120 EnDat encoder interface - Pinout ... 112
Table 80: 8AC121.60-1 - Order data ... 114
Table 81: 8AC121.60-1 - Technical data ... 114
Table 82: AC121 HIPERFACE encoder interface - Pinout ... 116
Table 83: 8AC122.60-3 - Order data ... 118
Table 84: 8AC122.60-3 - Technical data ... 119
Table 85: AC122 resolver interface - Pinout ... 120
Table 86: 8AC123.60-1 - Order data ... 121
Table 87: 8AC123.60-1 - Technical data ... 121
Table 88: AC123 incremental encoder and SSI absolute encoder interface - Pinout ... 123
Table 89: 8AC125.60-1 - Order data ... 125
Table 90: 8AC125.60-1 - Technical data ... 125
Table 91: AC125 pinout ... 126
Table 92: 8AC125.60-2 - Order data ... 128
Table 93: 8AC125.60-2 - Technical data ... 128
Table 94: BiSS encoder interface 8AC125.60-2 - Pinout ... 129
Table 95: 8AC125.61-2 - Order data ... 131
Table 96: 8AC125.61-2 - Technical data ... 131
Table 97: 8AC125.61-2 BiSS encoder interface - Pinout ... 132
Table 98: 8AC126.60-1 - Order data ... 134
Table 99: 8AC126.60-1 - Technical data ... 135
Table 100: BAT Status LED - AC126 ... 135
Table 101: AC126 EnDat 2.2 interface - Pinout ... 136
Table 102: 8AC130.60-1 - Order data ... 137
Table 103: 8AC130.60-1 - Technical data ... 137
Table 104: LED status 8AC130 ... 139
Table 105: AC130 digital mixed module - Pinout ... 139
Table 106: 8AC131.60-1 - Order data ... 141
Table 107: 8AC131.60-1 - Technical data ... 141
Table 108: AC131 mixed module - Pinout ... 143
Table 109: 8AXB000.0000-00 - Order data ... 145
Table 110: 8AXB000.0000-00 - Technical data ... 145
Table 111: 8B0W0045H000.000-1, 8B0W0045H000.001-1, 8B0W0079H000.000-1, 8B0W0079H000.001-1 - Order data ... 148
Table 112: 8B0W0045H000.000-1, 8B0W0045H000.001-1, 8B0W0079H000.000-1, 8B0W0079H000.001-1 - Technical data ... 148





Provided by Industrial Automation Co. • www.industrialautomationco.com • Parts & Repair: 877-727-8757

Table 113: 8CM005.12-0, 8CM007.12-0, 8CM010.12-0, 8CM015.12-0, 8CM020.12-0, 8CM025.12-0 - Order data....154
Table 114: 8CM005.12-0, 8CM007.12-0, 8CM010.12-0, 8CM015.12-0, 8CM020.12-0, 8CM025.12-0 - Technical data....154
Table 115: 8BCM0005.3034C-0, 8BCM0007.3034C-0, 8BCM0010.3034C-0, 8BCM0015.3034C-0, 8BCM0020.3034C-0, 8BCM0025.3034C-0 - Order data....156
Table 116: 8BCM0005.3034C-0, 8BCM0007.3034C-0, 8BCM0010.3034C-0, 8BCM0015.3034C-0, 8BCM0020.3034C-0, 8BCM0025.3034C-0 - Technical data....156
Table 117: 8CM005.12-1, 8CM007.12-1, 8CM010.12-1, 8CM015.12-1, 8CM020.12-1, 8CM025.12-1 - Order data....158
Table 118: 8CM005.12-1, 8CM007.12-1, 8CM010.12-1, 8CM015.12-1, 8CM020.12-1, 8CM025.12-1 - Technical data....158
Table 119: 8CM005.12-3, 8CM007.12-3, 8CM010.12-3, 8CM015.12-3, 8CM020.12-3, 8CM025.12-3 - Order data....160
Table 120: 8CM005.12-3, 8CM007.12-3, 8CM010.12-3, 8CM015.12-3, 8CM020.12-3, 8CM025.12-3 - Technical data....160
Table 121: 8CM005.19-3, 8CM007.19-3, 8CM010.19-3, 8CM015.19-3, 8CM020.19-3, 8CM025.19-3 - Order data....162
Table 122: 8CM005.19-3, 8CM007.19-3, 8CM010.19-3, 8CM015.19-3, 8CM020.19-3, 8CM025.19-3 - Technical data....162
Table 123: 8CM005.12-5, 8CM007.12-5, 8CM010.12-5, 8CM015.12-5, 8CM020.12-5, 8CM025.12-5 - Order data....164
Table 124: 8CM005.12-5, 8CM007.12-5, 8CM010.12-5, 8CM015.12-5, 8CM020.12-5, 8CM025.12-5 - Technical data....164
Table 125: 8CM005.12-8, 8CM007.12-8, 8CM010.12-8, 8CM015.12-8, 8CM020.12-8, 8CM025.12-8 - Order data....166
Table 126: 8CM005.12-8, 8CM007.12-8, 8CM010.12-8, 8CM015.12-8, 8CM020.12-8, 8CM025.12-8 - Technical data....166
Table 127: Motor cables - Cable construction....167
Table 128: 8CMxxx.12-0, 8CMxxx.12-1, 8CMxxx.12-3 motor cables - Pinout....167
Table 129: 8CMxxx.19-3, 8CMxxx.12-5 motor cables - Pinout....168
Table 130: 8CH005.12-1, 8CH007.12-1, 8CH010.12-1, 8CH015.12-1, 8CH020.12-1, 8CH025.12-1 - Order data....170
Table 131: 8CH005.12-1, 8CH007.12-1, 8CH010.12-1, 8CH015.12-1, 8CH020.12-1, 8CH025.12-1 - Technical data....170
Table 132: 8CH005.12-3, 8CH007.12-3, 8CH010.12-3, 8CH015.12-3, 8CH020.12-3, 8CH025.12-3 - Order data....172
Table 133: 8CH005.12-3, 8CH007.12-3, 8CH010.12-3, 8CH015.12-3, 8CH020.12-3, 8CH025.12-3 - Technical data....172
Table 134: Hybrid motor cables - Cable construction....174
Table 135: Custom cable length....174
Table 136: Hybrid motor cables - Pinout....174
Table 137: 8CE005.12-1, 8CE007.12-1, 8CE010.12-1, 8CE015.12-1, 8CE020.12-1, 8CE025.12-1 - Order data....176
Table 138: 8CE005.12-1, 8CE007.12-1, 8CE010.12-1, 8CE015.12-1, 8CE020.12-1, 8CE025.12-1 - Technical data....176
Table 139: EnDat 2.1 cables - Construction....177
Table 140: EnDat 2.1 cables - Pinout....177
Table 141: 8CR005.12-1, 8CR007.12-1, 8CR010.12-1, 8CR015.12-1, 8CR020.12-1, 8CR025.12-1 - Order data....179
Table 142: 8CR005.12-1, 8CR007.12-1, 8CR010.12-1, 8CR015.12-1, 8CR020.12-1, 8CR025.12-1 - Technical data....179
Table 143: Resolver cables - Construction....180
Table 144: Resolver cables - Pinout....180
Table 145: 8BCR0005.1121A-0, 8BCR0007.1121A-0, 8BCR0010.1121A-0, 8BCR0015.1121A-0, 8BCR0020.1121A-0, 8BCR0025.1121A-0 - Order data....182
Table 146: 8BCR0005.1121A-0, 8BCR0007.1121A-0, 8BCR0010.1121A-0, 8BCR0015.1121A-0, 8BCR0020.1121A-0, 8BCR0025.1121A-0 - Technical data....182
Table 147: Resolver cables - Cable construction....183



Provided by Industrial Automation Co. • www.industrialautomationco.com • Parts & Repair: 877-727-8757

Table 148: Resolver cables - Pinout....183
Table 149: 8BCM0005.10360-0, 8BCM0007.10360-0, 8BCM0010.10360-0, 8BCM0015.10360-0, 8BCM0020.10360-0, 8BCM0025.10360-0 - Order data....185
Table 150: 8BCM0005.10360-0, 8BCM0007.10360-0, 8BCM0010.10360-0, 8BCM0015.10360-0, 8BCM0020.10360-0, 8BCM0025.10360-0 - Technical data....185
Table 151: 8BCM0005.11140-0, 8BCM0007.11140-0, 8BCM0010.11140-0, 8BCM0015.11140-0, 8BCM0020.11140-0, 8BCM0025.11140-0 - Order data....187
Table 152: 8BCM0005.11140-0, 8BCM0007.11140-0, 8BCM0010.11140-0, 8BCM0015.11140-0, 8BCM0020.11140-0, 8BCM0025.11140-0 - Technical data....187
Table 153: 8BCM0005.13140-0, 8BCM0007.13140-0, 8BCM0010.13140-0, 8BCM0015.13140-0, 8BCM0020.13140-0, 8BCM0025.13140-0 - Order data....189
Table 154: 8BCM0005.13140-0, 8BCM0007.13140-0, 8BCM0010.13140-0, 8BCM0015.13140-0, 8BCM0020.13140-0, 8BCM0025.13140-0 - Technical data....189
Table 155: 8BCM0005.13250-0, 8BCM0007.13250-0, 8BCM0010.13250-0, 8BCM0015.13250-0, 8BCM0020.13250-0, 8BCM0025.13250-0 - Order data....191
Table 156: 8BCM0005.13250-0, 8BCM0007.13250-0, 8BCM0010.13250-0, 8BCM0015.13250-0, 8BCM0020.13250-0, 8BCM0025.13250-0 - Technical data....191
Table 157: 8BCM0005.15250-0, 8BCM0007.15250-0, 8BCM0010.15250-0, 8BCM0015.15250-0, 8BCM0020.15250-0, 8BCM0025.15250-0 - Order data....193
Table 158: 8BCM0005.15250-0, 8BCM0007.15250-0, 8BCM0010.15250-0, 8BCM0015.15250-0, 8BCM0020.15250-0, 8BCM0025.15250-0 - Technical data....193
Table 159: 8BCR0005.11120-0, 8BCR0007.11120-0, 8BCR0010.11120-0, 8BCR0015.11120-0, 8BCR0020.11120-0, 8BCR0025.11120-0 - Order data....195
Table 160: 8BCR0005.11120-0, 8BCR0007.11120-0, 8BCR0010.11120-0, 8BCR0015.11120-0, 8BCR0020.11120-0, 8BCR0025.11120-0 - Technical data....195
Table 161: 8BCR0005.11230-0, 8BCR0007.11230-0, 8BCR0010.11230-0, 8BCR0015.11230-0, 8BCR0020.11230-0, 8BCR0025.11230-0 - Order data....197
Table 162: 8BCR0005.11230-0, 8BCR0007.11230-0, 8BCR0010.11230-0, 8BCR0015.11230-0, 8BCR0020.11230-0, 8BCR0025.11230-0 - Technical data....197
Table 163: 8PM001.00-1, 8PM002.00-1, 8PM003.00-1 - Order data....199
Table 164: 8PM001.00-1, 8PM002.00-1, 8PM003.00-1 - Technical data....199
Table 165: 8PE001.00-1 - Order data....200
Table 166: 8PE001.00-1 - Technical data....200
Table 167: 8PR001.00-1 - Order data....202
Table 168: 8PR001.00-1 - Technical data....202
Table 169: Overview of the vertical offsets (ACOPOS - ACOPOS)....212
Table 170: Supply voltage range for ACOPOS servo drives....222
Table 171: Selecting the cross section of the protective ground conductor....222
Table 172: Protective ground conditions depending on the ACOPOS device....223
Table 173: Information about selecting the fuse....224
Table 174: Constant k....225
Table 175: Current-carrying capacity of PVC insulated three-phase cables or individual wires....225
Table 176: Tripping characteristics of the fuse for the power mains connection....226
Table 177: Model numbers for the line chokes available from B&R....227
Table 178: Discharge capacitance $C_A$....229
Table 179: Circuit diagram for ACOPOS motor connection....233
Table 180: Current-carrying capacity of specially insulated three-phase cables....234
Table 181: Current-carrying capacity of PVC-insulated three-phase cables....234
Table 182: Braking resistors for ACOPOS servo drives....235
Table 183: The location where the fuse for the external braking resistor connection is installed....236
Table 184: Overview of braking resistor data - 8B0W....238
Table 185: Series and parallel connection of braking resistors....239
Table 186: ParIDs for setting external braking resistor parameters....247
Table 187: Maximum power output for all slots depending on the ACOPOS servo drive....248
Table 188: Power consumption $P_{module}$ of ACOPOS plug-in modules....248
Table 189: Maximum current requirements and constant k....249
Table 190: Calculation of the effective control cabinet surface A (DIN VDE 57 660 part 500 or IEC 890)....251
Table 191: Determining the heat dissipation of all devices in the control cabinet....251





Provided by Industrial Automation Co. • www.industrialautomationco.com • Parts & Repair: 877-727-8757

Table 192: Compensation factor f depending on the control cabinet's installation altitude..... 252
Table 193: Determining the heat dissipation of all devices in the control cabinet.....253
Table 194: Determining the heat dissipation of all devices in the control cabinet.....254
Table 195: Determining the heat dissipation of all devices in the control cabinet.....256
Table 196: Formula symbols used.....258
Table 197: Grounding of the motor cable on the ACOPOS servo drive..... 263
Table 198: Terminal cross sections for ACOPOS servo drives..... 266
Table 199: Safety classifications, criteria and characteristics for safe pulse disabling.....267
Table 200: Overview of safety functions according to standards.....267
Table 201: Overview of stop function categories..... 290
Table 202: Overview of performance levels (PL)..... 290



Provided by Industrial Automation Co. • www.industrialautomationco.com • Parts & Repair: 877-727-8757

## A

AC122 resolver module ... 118
Accident prevention regulations ... 20
ACOPOS configurations
  CAN bus ... 18
  Compact, modular ... 17
  Drive-based control ... 19
  Extensive, modular ... 18
ACOPOS servo amplifier indicators ... 31
ACOPOS servo drive in DC bus network ... 244
ACOPOS servo drive series ... 30
Active braking of the motor ... 232
Air/Air heat exchangers ... 214
  Function diagram ... 214
Air/Water heat exchangers ... 215
  Function diagram ... 215
Apparent power Transformer ... 222
Arrangement of cooling units ... 216
Autotransformer ... 222

## B

B&R Automation Studio ... 12, 14
Backup batteries ... 136
Balancing resistors ... 231
Battery module ... 136
BiSS encoder module AC125 ... 125
Braking resistor data ... 238
Braking resistors ... 235

## C

Cable
  Assembly ... 218
Cable connection
  Via DSUB connector ... 262
  Via RJ45 connector ... 262
  Via terminals ... 262
Cable diagram
  8CE EnDat 2.1 cable ... 178
  8CM motor cables ... 169, 169
  8CR resolver cables ... 181
Cables
  EnDat 2.1 cables ... 176
  General information ... 150
  Motor cables ... 154
  Resolver cables ... 179
Cables from other manufacturers ... 150
Cable shields ... 260
Calculating characteristic values ... 24
Calculating the effective control cabinet surface area A ... 251
Calculation for dimensioning the braking resistor
  Average brake power for one cycle ... 238
  Average temperature in continuous operation ... 239
  Braking energy for one cycle ... 238
  Braking energy per braking procedure ... 238
  Continuous power ... 243
  Determining braking resistor data ... 238
  Maximum brake power within one cycle ... 238
  Maximum heat that can be absorbed by the braking resistor ... 239
  Maximum temperature in continuous operation ... 239



Provided by Industrial Automation Co. • www.industrialautomationco.com • Parts & Repair: 877-727-8757

Power calculation... 238
Thermal resistance... 243
Thermal time constant of the braking resistor... 239
Total braking time within one cycle... 238
Cam profile editor... 15
CAN module AC110... 105
Causes of errors... 23
Choosing a fuse
Suitable fuse... 224
Clampable cross sections... 266
Condensation... 216
Conditions
Connection and environmental conditions... 21
External braking resistor... 243
Connecting encoders, sensors and actuators... 11
Connecting external braking resistors... 236
Connecting the mounting bracket to ground... 262
Connection cable for external braking resistor... 263
Connection diagram for ground and shield connections... 260
Connectors
EnDat connectors... 200
General information... 199
Motor connectors... 199
Resolver connectors... 202
Constant k for servo drives... 225, 249
Construction
Motor connection... 233
Cooling systems... 213, 250
Cooling systems in control cabinets... 213
Cooling unit temperature... 216
Criteria for safe pulse disabling... 267
Cross sections, clampable... 266
Current-carrying capacity of PVC-insulated three-phase cables... 225, 234
Current-carrying capacity of specially insulated three-phase cables... 234

## D

DC bus... 230, 230
DC bus connections... 231
DC bus power supplies... 30
DC-DC converter... 268
DC-to-DC converter... 269
Determining current load... 224
Determining power mains cross section... 225
Determining the peak load factor k... 245
Determining the value of the braking resistor... 243
Digital mixed module - AC130... 137
Dimension diagrams
ACOPOS 1010, 1016... 204
ACOPOS 1022, 1045, 1090... 205
ACOPOS 1180, 1320... 206
ACOPOS 128M... 208
ACOPOS 1640... 207
Dimension diagrams and installation dimensions
External braking resistors... 209
Dimensioning
Air/air heat exchangers... 254
Air/water heat exchanger... 256
Braking resistors... 235
DC bus... 230
Filter fans... 252
Fuse... 224



Provided by Industrial Automation Co. • www.industrialautomationco.com • Parts & Repair: 877-727-8757

Line contactor ... 226
Motor connection ... 233
Natural convection ... 251
Power mains ... 224
Power mains connection ... 221
Dimensioning the motor cable cross section ... 233
Discharge capacitance ... 229
Disposal ... 24
Drive-based automation ... 19

## E

Electronic gearbox ... 121
Embedded parameter chip ... 10
EMC-compatible installation ... 260
Emergency stops ... 290
Encoder cable ... 263
Encoder connectors
EnDat ... 200
Resolver ... 202
Encoders for external axes ... 118
Encoder systems
BiSS encoder module ... 125
EnDat 2.1 encoder module ... 110
HIPERFACE encoder module ... 114
Incremental / SSI encoder module ... 121
Resolver module ... 118
EnDat 2.1 ... 110
EnDat 2.1 cable
Wiring ... 177
EnDat 2.1 encoder module AC120 ... 110
EnDat 2.2 module AC126 ... 134
EnDat cable
Order data ... 176
EnDat cables
Technical data ... 176
EnDat connectors
Order data ... 200
Technical data ... 200
Environmentally friendly disposal ... 24
Environmentally friendly separation of materials ... 24
ESD ... 21
ESD protective measures ... 21
E-stop button ... 23
External braking resistor
Location of the fuse ... 236
External braking resistor connection fuse ... 236

## F

Fault current protection ... 229
Fault current protective device ... 229
Filter fans
Dimensioning ... 252
Function diagram ... 213
Formula variables ... 258
Forward movement ... 269
Function blocks ... 12, 12
Function diagram
Filter fans ... 213
Fuse ... 224
Fuse for the power mains connection ... 224, 228



Provided by Industrial Automation Co. • www.industrialautomationco.com • Parts & Repair: 877-727-8757

## G

Grounding clamps ... 263
Grounding of the motor cable on the ACOPOS servo drive ... 263
Grounding plate ... 263
Grounding the cable shield ... 262
Guidelines for ESD handling ... 21

## H

Hardwired safety technology ... 267
Hazards ... 20
High voltage testing ... 264
HIPERFACE ... 114

## I

IGBT driver ... 268
Improperly sealed control cabinet ... 213
Increased discharge current ... 222
Incremental / SSI absolute encoder module AC123 ... 121
Inductive switching elements ... 260
Input/output circuit diagram
  ACOPOS 1010, 1016 ... 54
  ACOPOS 1180, 1320 ... 88
Input/Output circuit diagram
  AC110 ... 106
  AC120 ... 113
  AC121 ... 117
  AC122 ... 120
  AC123 ... 124
  AC130 ... 140
  AC131 ... 144
  ACOPOS 1022, 1045, 1090 ... 73
  ACOPOS 1640, 128M ... 102
Input/output diagram
  AC114 ... 109
Installation
  Plug-in module ... 211
  Air/Air heat exchangers ... 214
  Air/Air heat exchangers behind mounting plates ... 214
  Air/Water heat exchangers ... 215
  Air/Water heat exchangers behind mounting plates ... 215
Installation conditions ... 203
Installation dimensions
  ACOPOS 1010, 1016 ... 204
  ACOPOS 1022, 1045, 1090 ... 205
  ACOPOS 1180, 1320 ... 206
  ACOPOS 128M ... 208
  ACOPOS 1640 ... 207
  External braking resistors ... 209
Installing plug-in module cables ... 265
Insulation resistance testing ... 264
Intermediate transformer ... 222
Internal monitoring ... 23
Isolation transformers ... 221
IT power mains ... 221

## L

LED status



Provided by Industrial Automation Co. • www.industrialautomationco.com • Parts & Repair: 877-727-8757

AC110 ... 32
AC114 ... 32
Line shielding ... 260

## M

Machine guidelines ... 21
Main principle of air/air heat exchangers ... 254
Main principle of the air/water heat exchanger ... 256
Mains configurations ... 221
IT power mains ... 221
TN power mains ... 221
TN-S power mains ... 221
TT power mains ... 221
Manual history ... 9
Manufacturers of fault current protective devices ... 229
Matching transformer ... 222
Maximum current requirements 24 VDC ... 249
Mission time ... 24
Mixed module - AC131 ... 141
MODE C ... 125
Motor cable assembly ... 218
Motor cables ... 154, 218
Motor connection ... 233
Motor connectors ... 199
Motor line ... 263
Motors
Embedded parameter chip ... 10
General ... 10
Mounting
Second protective ground wire ... 223
Multiple errors in the IGBT bridge ... 269

## N

Natural convection ... 213
Networking drives, controllers and visualization units ... 11
Nominal continuous power of a braking resistor ... 244
Number of plug-in modules according to the size of the servo drive ... 104

## O

Operation ... 22
Operation with the control cabinet doors open ... 216
Optional accessories
AC120 ... 110
AC122 ... 118
AC126 ... 134
ACOPOS 1010 ... 33
ACOPOS 1016 ... 41
ACOPOS 1022 ... 57
ACOPOS 1045 ... 61
ACOPOS 1090 ... 65
ACOPOS 1180 ... 75
ACOPOS 128M ... 94
ACOPOS 1320 ... 79
ACOPOS 1640 ... 90
Oscilloscope function ... 15
Overview of braking resistor data ... 238





Provided by Industrial Automation Co. • www.industrialautomationco.com • Parts & Repair: 877-727-8757

## P

Packaging ... 21
Parallel connection
  Braking resistor ... 239
Parameter memory ... 110, 114
Partially-coated circuit boards ... 10
Performance levels (PL) ... 290
Permanent magnet synchronous motors ... 269
Pinout
  AC122 ... 120
  ACOPOS 1010, 1016 ... 49
  ACOPOS 1022, 1045, 1090 ... 68
  ACOPOS 1180, 1320 ... 83
Pinouts
  8B0W braking resistor ... 149
  AC110 ... 106
  AC114 ... 109
  AC120 ... 112
  AC121 ... 116
  AC123 ... 123
  AC125 ... 126
  AC126 ... 136
  AC130 ... 139
  AC131 ... 143
  ACOPOS 1640, 128M ... 98
PLCopen ... 12
Plug-in module cables ... 265
Plug-in module combinations ... 248
Plug-in module indicators
  AC130 ... 139
Plug-in modules
  Installing and removing ... 211
  AC110 ... 105
  AC114 ... 107
  AC120 ... 110
  AC121 ... 114
  AC122 ... 118
  AC123 ... 121
  AC125 ... 125
  AC126 ... 134
  AC130 ... 137
  AC131 ... 141
Plug-in module status indicators
  AC110 ... 106
  AC131 ... 143
Plug-in module status indicators -
  AC114 ... 108
Positioning tasks ... 12
Power calculation ... 238
Power consumption of the ACOPOS plug-in modules ... 248
Power failure ... 232
Power failures ... 30
POWERLINK ... 16
POWERLINK network cabling ... 262
POWERLINK V2 module ... 107
Power mains connection
  ACOPOS - Individual ... 224
  Drive groups ... 227
Power mains systems ... 221, 221
Power output for all slots ... 248
Programming ... 12



Provided by Industrial Automation Co. • www.industrialautomationco.com • Parts & Repair: 877-727-8757

Programming languages ... 12
Proof test interval ... 24
Proper ESD handling ... 21
Protection type - Connectors ... 199
Protective ground (PE) discharge current ... 229
Protective ground conductor system ... 264
Protective ground wires (PE) ... 262

## Q

Qualified personnel ... 20

## R

Rated current for the fuse ... 224
Rated current of the line contactor ... 226
RCD - residual current-operated protective device ... 229
Removing plug-in modules ... 211, 211
Required accessories
  AC126 ... 134
  AC130 ... 137
  AC131 ... 141
Requirements for cooling systems
  For air/air heat exchangers ... 254
  For filter fans ... 252
  For natural convection ... 251
Resolver cable
  Construction ... 180
  Order data ... 179
  Technical data ... 179
Resolver connectors ... 202
Response speeds ... 16
Risk assessment ... 291
Risk graph ... 291
Risk parameters ... 291
RMS value of the motor current ... 233

## S

Safe pulse disabling ... 267
Safety ... 10
Safety characteristics for safe pulse disabling ... 267
Safety classifications ... 267
Safety functions
  According to the standard ... 267
  Secure restart interlock ... 273, 275, 277
  SLS ... 273, 275, 277
  SOS ... 273
  SS1 ... 275, 277
  SS2 ... 275, 277
  STO ... 270, 271, 273
Safety functions that can be implemented ... 267
Safety guidelines ... 20
Safety integrity level - SIL ... 290
Safety measures ... 23
Safety-related parts of a control system ... 290
SCCR ... 30, 221
Screwing in the eye bolt ... 203
Screws for fastening the module ... 262
Second protective ground connection ... 262
Selection
  Cooling system ... 250





Provided by Industrial Automation Co. • www.industrialautomationco.com • Parts & Repair: 877-727-8757

Protective ground conductor ... 222
Series connection - Braking resistor ... 239
Service work ... 10
Setting node numbers
CAN ... 106
Setting parameters ... 10
Setting parameters for external braking resistors ... 247
Setting the CAN node number ... 106
Setting the POWERLINK node number ... 108
Setting the station number
POWERLINK ... 108
Shaft key ... 23
Shield clamps ... 260
Shield connection for the motor cable using grounding clamps ... 263
Shield connections ... 260
Shielded cables ... 260, 260
Short circuit between two wires ... 270
Software ... 13
Stop command (code example) ... 278
Stop function categories ... 290
Stop functions ... 290
Storage ... 22
Structure
Individual power mains connection ... 224
Power mains connection for drive groups ... 227
Suppressor elements ... 260
Synchronous motors, permanent magnet ... 269

## T

Thermal equivalent circuit diagram ... 247
Thermal equivalent RMS value for the motor current ... 233
Three-phase induction motors ... 269
Three-phase transformers ... 221
TN power mains ... 221
TN-S power mains ... 221
Trace function ... 14
Transport ... 22
Trigger inputs ... 11, 262
Trigger options ... 15
TT power mains ... 221
Type of control cabinet installation ... 251
Type plate ... 20

## V

Vertical offset ... 212

## W

Warning label ... 23
Wire cross section - Protective ground conductor ... 222
Wire types ... 266
Wiring
DC bus ... 231
EnDat 2.1 cable ... 177
General information ... 260
Mains connection ... 224
Motor cables ... 167
Resolver cables ... 180
Working on servo drives ... 22



Provided by Industrial Automation Co. • www.industrialautomationco.com • Parts & Repair: 877-727-8757

8AC110.60-3 ... 105
8AC114.60-2 ... 107
8AC120.60-1 ... 110
8AC121.60-1 ... 114
8AC122.60-3 ... 118
8AC123.60-1 ... 121
8AC125.60-1 ... 125
8AC125.60-2 ... 128
8AC125.61-2 ... 131
8AC126.60-1 ... 134
8AC130.60-1 ... 137
8AC131.60-1 ... 141
8AXB000.0000-00 ... 145
8B0W0045H000.000-1 ... 148
8B0W0045H000.001-1 ... 148
8B0W0079H000.000-1 ... 148
8B0W0079H000.001-1 ... 148
8BCM0005.10360-0 ... 185
8BCM0005.11140-0 ... 187
8BCM0005.13140-0 ... 189
8BCM0005.13250-0 ... 191
8BCM0005.15250-0 ... 193
8BCM0005.3034C-0 ... 156
8BCM0007.10360-0 ... 185
8BCM0007.11140-0 ... 187
8BCM0007.13140-0 ... 189
8BCM0007.13250-0 ... 191
8BCM0007.15250-0 ... 193
8BCM0007.3034C-0 ... 156
8BCM0010.10360-0 ... 185
8BCM0010.11140-0 ... 187
8BCM0010.13140-0 ... 189
8BCM0010.13250-0 ... 191
8BCM0010.15250-0 ... 193
8BCM0010.3034C-0 ... 156
8BCM0015.10360-0 ... 185
8BCM0015.11140-0 ... 187
8BCM0015.13140-0 ... 189
8BCM0015.13250-0 ... 191
8BCM0015.15250-0 ... 193
8BCM0015.3034C-0 ... 156
8BCM0020.10360-0 ... 185
8BCM0020.11140-0 ... 187
8BCM0020.13140-0 ... 189
8BCM0020.13250-0 ... 191
8BCM0020.15250-0 ... 193
8BCM0020.3034C-0 ... 156
8BCM0025.10360-0 ... 185
8BCM0025.11140-0 ... 187
8BCM0025.13140-0 ... 189
8BCM0025.13250-0 ... 191
8BCM0025.15250-0 ... 193
8BCM0025.3034C-0 ... 156
8BCR0005.11120-0 ... 195
8BCR0005.1121A-0 ... 182
8BCR0005.11230-0 ... 197
8BCR0007.11120-0 ... 195
8BCR0007.1121A-0 ... 182
8BCR0007.11230-0 ... 197
8BCR0010.11120-0 ... 195
8BCR0010.1121A-0 ... 182
8BCR0010.11230-0 ... 197





Provided by Industrial Automation Co. • www.industrialautomationco.com • Parts & Repair: 877-727-8757

8BCR0015.11120-0 ... 195
8BCR0015.1121A-0 ... 182
8BCR0015.11230-0 ... 197
8BCR0020.11120-0 ... 195
8BCR0020.1121A-0 ... 182
8BCR0020.11230-0 ... 197
8BCR0025.11120-0 ... 195
8BCR0025.1121A-0 ... 182
8BCR0025.11230-0 ... 197
8CE005.12-1 ... 176
8CE007.12-1 ... 176
8CE010.12-1 ... 176
8CE015.12-1 ... 176
8CE020.12-1 ... 176
8CE025.12-1 ... 176
8CH005.12-1 ... 170
8CH005.12-3 ... 172
8CH007.12-1 ... 170
8CH007.12-3 ... 172
8CH010.12-1 ... 170
8CH010.12-3 ... 172
8CH015.12-1 ... 170
8CH015.12-3 ... 172
8CH020.12-1 ... 170
8CH020.12-3 ... 172
8CH025.12-1 ... 170
8CH025.12-3 ... 172
8CM005.12-0 ... 154
8CM005.12-1 ... 158
8CM005.12-3 ... 160
8CM005.12-5 ... 164
8CM005.12-8 ... 166
8CM005.19-3 ... 162
8CM007.12-0 ... 154
8CM007.12-1 ... 158
8CM007.12-3 ... 160
8CM007.12-5 ... 164
8CM007.12-8 ... 166
8CM007.19-3 ... 162
8CM010.12-0 ... 154
8CM010.12-1 ... 158
8CM010.12-3 ... 160
8CM010.12-5 ... 164
8CM010.12-8 ... 166
8CM010.19-3 ... 162
8CM015.12-0 ... 154
8CM015.12-1 ... 158
8CM015.12-3 ... 160
8CM015.12-5 ... 164
8CM015.12-8 ... 166
8CM015.19-3 ... 162
8CM020.12-0 ... 154
8CM020.12-1 ... 158
8CM020.12-3 ... 160
8CM020.12-5 ... 164
8CM020.12-8 ... 166
8CM020.19-3 ... 162
8CM025.12-0 ... 154
8CM025.12-1 ... 158
8CM025.12-3 ... 160
8CM025.12-5 ... 164
8CM025.12-8 ... 166



Provided by Industrial Automation Co. • www.industrialautomationco.com • Parts & Repair: 877-727-8757

8CM025.19-3....162
8CR005.12-1....179
8CR007.12-1....179
8CR010.12-1....179
8CR015.12-1....179
8CR020.12-1....179
8CR025.12-1....179
8PE001.00-1....200
8PM001.00-1....199
8PM002.00-1....199
8PM003.00-1....199
8PR001.00-1....202
8V1010.00-2....33
8V1010.001-2....33
8V1010.50-2....37
8V1010.501-2....37
8V1016.00-2....41
8V1016.001-2....41
8V1016.50-2....45
8V1016.501-2....45
8V1022.00-2....57
8V1022.001-2....57
8V1045.00-2....61
8V1045.001-2....61
8V1090.00-2....65
8V1090.001-2....65
8V1180.00-2....75
8V1180.001-2....75
8V128M.00-2....94
8V128M.001-2....94
8V1320.00-2....79
8V1320.001-2....79
8V1640.00-2....90
8V1640.001-2....90





Provided by Industrial Automation Co. • www.industrialautomationco.com • Parts & Repair: 877-727-8757